Aloka

# SERVICE MANUAL

## ECHO CAMERA

## SSD - 680EX / SSD - 680STD

1 / 2

English Edition

Document Number : MN2-0187
Document Revision : 4

| Edited by ALOKA ME Service Center | | |
|---|---|---|
| Approved by | Checked by | Written by |
| K. Kozuka<br>25 - July - '94 | K. Nakashima<br>25 - Jul - 1994 | M. Kawai<br>22 - Jul. - 1994 |

Copyright ALOKA Co., Ltd.
6-22-1, Mure, Mitaka-shi, Tokyo, Japan

# SSD-680EX/SSD-680STD SERVICE MANUAL 1/2 CONTENTS


PAGE

Section 1 How to use this Service Manual PAGE 1-1~1-5 (3 sheets)

| | | |
|---|---|---|
| 1-1 | Service Manual | 1 - 1 |
| 1-2 | Contents of tihs Service Manual | 1 - 1 |
| 1-3 | Construction of this Service Manual | 1 - 2 |
| 1-4 | Contents of Each Section | 1 - 2 |
| 1-5 | Difference between SSD-680EX and SSD-680STD | 1 - 5 |

Section 2 Precautions PAGE 2-1~2-4 (2 sheets)

| | | |
|---|---|---|
| 2-1 | Precautions Agaainst Electrical Hazerds to Serviceman | 2 - 1 |
| 2-2 | Precautions Agaainst Mechanical Hazerds to Serviceman | 2 - 1 |
| 2-3 | Precautions Agaainst Germ Hazerds to Serviceman | 2 - 1 |
| 2-4 | Precautions for Keeping Electrical Safety | 2 - 2 |
| 2-5 | Precautions for Keeping Mechanical Safety | 2 - 2 |
| 2-6 | Precautions for Keeping Chenicals Safety | 2 - 2 |
| 2-7 | Precautions to be Made at Service Center | 2 - 2 |
| 2-8 | Care to be Taken in the filed | 2 - 3 |

Sectoin 3 Before repairing PAGE 3-1~3-15 (8 sheets)

| | | |
|---|---|---|
| 3-3 | Repair work on the description of Service Manual | 3 - 1 |
| 3-4 | Modification work on the description of Service Manual | 3 - 7 |
| 3-3 | Restting the Buckup Memory (RAM) | 3 - 13 |
| 3-4 | Display method for Color Test Pattern | 3 - 14 |
| 3-5 | Care on Handling of Surface Mount Device (SMD), and Surface Maunt TEchnology (SMT) PCBs | 3 - 15 |

Section 4 Disassembling Procedure PAGE 4-1~4-74 (37 sheets)

| | |
|---|---|
| SSD-680EX Disassembling Instructions | 4 - 1 |
| SSD-680STD Disassembling Instructions | 4 - 23 |
| INSTALLATION PROCEDURES SSD-680EX, SSD-680STD | 4 - 43 |

Section 5 SYSTEM BLOCK DAIGRAM PAGE 5-1~5-2 (2 sheets)

| | |
|---|---|
| SSD-680EX SYSTEM BLOCK | 5 - 1 |
| SSD-680STD SYSTEM BLOCK | 5 - 2 |




Rev. 4 (22-Jul.-1994)

## Section 6 PCB BLOCK DIAGRAM PAGE 6-1~6-111 (56 sheets)


| | | |
|---|---|---|
| 6-1 | EP-3265 MAIN CONTROL ..... ..... | 6 - 2 |
| 6-2 | EP-3454 PROBE SELECTOR (including EP-3453 PROBE SELECT RELAY) ..... | 6 - 6 |
| 6-3 | EP-3455 RX SELECT ..... ..... | 6 - 18 |
| 6-4 | EP-3456 TX 1 ..... ..... | 6 - 22 |
| 6-5 | EP-3457 TX 2 ..... ..... | 6 - 26 |
| 6-6 | EP-3458 Pre AMP ..... ..... | 6 - 30 |
| 6-7 | EP-3459 RX FOCUS ..... ..... | 6 - 34 |
| 6-8 | EP-3461 MAIN AMP & COLOR ITF ..... | 6 - 38 |
| 6-9 | EP-3463 VBPF & GAIN CONTROL ..... | 6 - 40 |
| 6-10 | EP-3464 TX TRIGGER GENE .... ..... | 6 - 42 |
| 6-11 | EP-3465 GEU TIMING & ADDRESS ..... | 6 - 46 |
| 6-12 | EP-3525 GEU INTERFACE ..... ..... | 6 - 48 |
| 6-13 | EP-3452 RX SELECT CONT ..... ..... | 6 - 52 |
| 6-14 | EP-3247 B/W MEMORY ..... ..... | 6 - 54 |
| 6-15 | EP-3236 DSC ADDRESS ..... ..... | 6 - 56 |
| 6-16 | EP-3620 DSC TIMING ..... ..... | 6 - 60 |
| 6-17 | EP-2729 A/D, D/A ..... ..... | 6 - 62 |
| 6-18 | EP-2913 DUAL MPU ..... ..... | 6 - 64 |
| 6-19 | EP-2629 AGDC ..... ..... | 6 - 66 |
| 6-20 | EP-3477 US ITF ..... ..... | 6 - 70 |
| 6-21 | EP-2651 COLOR D/A ..... ..... | 6 - 72 |
| 6-22 | EP-3237 CINE B/W MEMORY ... ..... | 6 - 74 |
| 6-23 | EP-5100 COLOR FLOW PROCESSOR ..... | 6 - 76 |
| 6-24 | EP-3115 COLOR LINE BUFFER . ..... | 6 - 78 |
| 6-25 | EP-3114 COLOR POST PROCESS ..... | 6 - 80 |
| 6-26 | EP-2213 COLOR MEMORY VEL / COLOR MEMORY VAR | 6 - 82 |
| 6-27 | EP-3238 COLOR CINE MEMORY ..... | 6 - 86 |
| 6-28 | EP-3443 VIDEO ITF ..... ..... | 6 - 88 |
| 6-29 | EP-3260 DOP TXRX ..... ..... | 6 - 92 |
| 6-30 | EP-2810 DOP CONTROLLER .... ..... | 6 - 94 |
| 6-31 | EP-3259 DOP FILTER ..... ..... | 6 - 96 |
| 6-32 | EP-2812 DOP INTERFACE ..... ..... | 6 - 98 |
| 6-33 | NJK-196A FFT board ..... ..... | 6 - 102 |
| 6-34 | NJK-196A OUTPUT board ..... ..... | 6 - 104 |
| 6-35 | EP-3117 PHYSIO AMP (OPTION) ..... | 6 - 108 |
| 6-36 | EP-2841 ECG MEMORY (OPTION) ..... | 6 - 110 |

## Section 7 Circuit Diagram PAGE 7-1~7-137 (83 sheets)


7-1 SSD-680EX

7-1-1 PSC-118 MAIN UNIT CABLE CONNECTION ..... 7 - 1

7-1-2 Cables

| | | | |
|---|---|---|---|
| CABLE 1 | CABLE 2 | CABLE 3 ..... | 7 - 5 |
| CABLE 5 | CABLE 6 | CABLE 7 ..... | 7 - 8 |
| CABLE 9 | CABLE 11 | CABLE 12 ..... | 7 - 11 |
| CABLE 13 | CABLE 15 | CABLE 17 ..... | 7 - 14 |
| CABLE 18B | CABLE 30B | CABLE 31 ..... | 7 - 17 |
| CABLE 33B | CABLE 37 | CABLE 38B ..... | 7 - 20 |
| CABLE 43 | CABLE 44C | CABLE 46B ..... | 7 - 23 |
| CABLE 48 | CABLE 50 | CABLE 51 ..... | 7 - 26 |
| CABLE 53 | CABLE 54 | CABLE 102B ..... | 7 - 29 |
| CABLE 103B | CABLE 200 | CABLE 202 ..... | 7 - 32 |
| CABLE 203 / 205 | | CABLE 204 ..... | 7 - 35 |
| CABLE 206 | CABLE 207 | CABLE 208 ..... | 7 - 37 |
| CABLE 209 | CABLE 210C | CABLE 211B ..... | 7 - 40 |
| CABLE 212B | CABLE 213 | CABLE 214 ..... | 7 - 43 |
| CABLE 600 | CABLE 601 | CABLE 602 ..... | 7 - 46 |
| CABLE 603 | CABLE 607 | CABLE 608 ..... | 7 - 50 |
| CABLE 609 | CABLE 610 | CABLE 611 ..... | 7 - 54 |
| CABLE 612 | CABLE 620 | CABLE 621 ..... | 7 - 57 |
| CABLE 622 | CABLE 623 | CABLE 624 ..... | 7 - 60 |

7-1-3 MAIN BODY

L-KEY-19 MAIN PANEL ..... ..... 7 - 63

L-KEY-26 FULL KEYBOARD . ..... 7 - 65

EP-2512 BLIND PANEL ..... ..... 7 - 66

EP-3143 POWER LAMP ..... ..... 7 - 67

EP-2510 PHONE JACK ..... ..... 7 - 68

7-1-4 TX & RX UNIT

GEU-64 CABLE CONNECTION ..... 7 - 69

EP-3466 MOTHER BOARD .... ..... 7 - 70

7-1-5 DSC UNIT

UIM-325 SCHEMATIC DIAGRAM ..... 7 - 86

EP-3467 MOTHER BOARD .... ..... 7 - 87

EP-2700 FOOT SWITCH CONNECTOR ..... 7 - 99

EP-3179 S-VHS CONNECTOR . ..... 7 - 94

7-1-6 DOPPLER UNIT
UGR-680EX ..... 7 - 95
FFA-18B ..... 7 - 96
DM-5 ..... 7 - 97
EP-2808 MOTHER BOARD .... 7 - 98
7-1-7 POWER SUPPLY UNIT
PSU-S680B ..... 7 - 102
PSU-S680C ..... 7 - 103
EP-3240B ..... 7 - 104
EP-2819C1 (for ±5V control) .. 7 - 106
EP-2819C2 (for ±15V control) . 7 - 107
EP-2922B ..... 7 - 108
PTU-004 ISOLATION TRANSFORMER ..... 7 - 109
7-1-8 COLOR TV MONITOR
IPC-1010 10 inch color TV monitor ..... 7 - 110
IPC-1230W 12 inch color TV monitor ..... 7 - 116
7-1-9 ECG SIGNAL DISPLAY UNIT (OPTION)
PEU-680B
EU-5026 ..... 7 - 122
CABEL 4, CABLE 34, CABLE 42, CABLE 52 ..... 7 - 123
L-KEY-8B SWITCH PANEL . ..... 7 - 127

7-2 SSD-680STD

The diagrames marked with "*" are common to SSD-680EX.
Please refer to 7-1 SSD-680EX diagrames for those.

7-2-1 PSC-120 MAIN UNIT CABLE CONNECTION ..... 7 - 128
7-2-2 *Cables
7-2-3 MAIN BODY
*L-KEY-19 MAIN PANEL
*L-KEY-26 FULL KEYBOARD
*EP-2512 BLIND PANEL
*EP-3143 POWER LAMP
*EP-2510 PHONE JACK
7-2-4 TX & RX UNIT
GEU-65 CABLE CONNECTION ..... 7 - 132
*EP-3466 MOTHER BOARD
7-2-5 DSC UNIT
UIM-326 SCHEMATIC DIAGRAM ..... 7 - 133
*EP-3467 MOTHER BOARD
*EP-2700 FOOT SWITCH CONNECTOR
*EP-3179 S-VHS CONNECTOR
7-2-6 DOPPLER UNIT (OPTION)
*UGR-680STD (Common to UGR-680EX)
*FFA-18B
*DM-5
*EP-2808 MOTHER BOARD
7-2-7 POWER SUPPLY UNIT
*PSU-S680B
*PSU-S680C
*EP-3240B
*EP-2819C1 (for ±5V control)
*EP-2819C2 (for ±15V control)
*EP-2922B
*PTU-004 ISOLATION TRANSFORMER
7-2-8 B/W TV MONITOR
IP-1230C-TH (for NTSC) ..... ..... 7 - 134
IP-1230CV-TH (for PAL) ..... ..... 7 - 136
7-2-9 ECG SIGNAL DISPLAY UNIT (OPTION)
*PEU-680B
*EU-5026
*L-KEY-8B SWITCH PANEL

Section 8 Trouble Shooting PAGE 8-1~8-64 (32 sheets)


| | | |
|---|---|---|
| 8-1 | Introduction | 8 - 1 |
| 8-2 | Precautions | 8 - 1 |
| 8-3 | Tools and Measuring Instruments Required | 8 - 4 |
| 8-4 | *(Deleted:Applying this Trouble Shooting)* | 8 - 4 |
| 8-5 | Information | 8 - 6 |
| 8-5-1 | Automatically Setting after Powering On | 8 - 6 |
| 8-5-2 | Setting Switches on the PCB | 8 - 6 |
| 8-5-3 | Usage of the Functions to be Set by the User | 8 - 9 |
| 8-5-4 | Resetting the Backup Memory (RAM) | 8 - 10 |
| 8-5-5 | PCB Arrangement | 8 - 12 |
| 8-5-6 | Arrangement of ROMs | 8 - 15 |
| 8-5-7 | Correction for the Fail to Start or Locking up | 8 - 22 |
| 8-5-8 | Power supply unit output connector list | 8 - 23 |
| 8-5-9 | Preset Record Sheet | 8 - 24 |
| 8-6 | Check List Map | 8 - 29 |
| 8-6-1 | Phenomenon Code | 8 - 29 |
| 8-6-2 | Map | 8 - 36 |
| 8-7 | Waveform foer troubleshooting | 8 - 43 |


## (SSD-680EX/SSD-680STD SERVICE MANUAL 2/2 CONTENTS)


Section 9 Adjustment Procedure

Section 10 Performance Check

Section 11 Maintenance Information

Section 12 History of Improvement

Section 13 Parts List

Section 14 Outline of System

Section 15 Principle of Operation (System)

Section 16 Principle of Operation (Hardware)

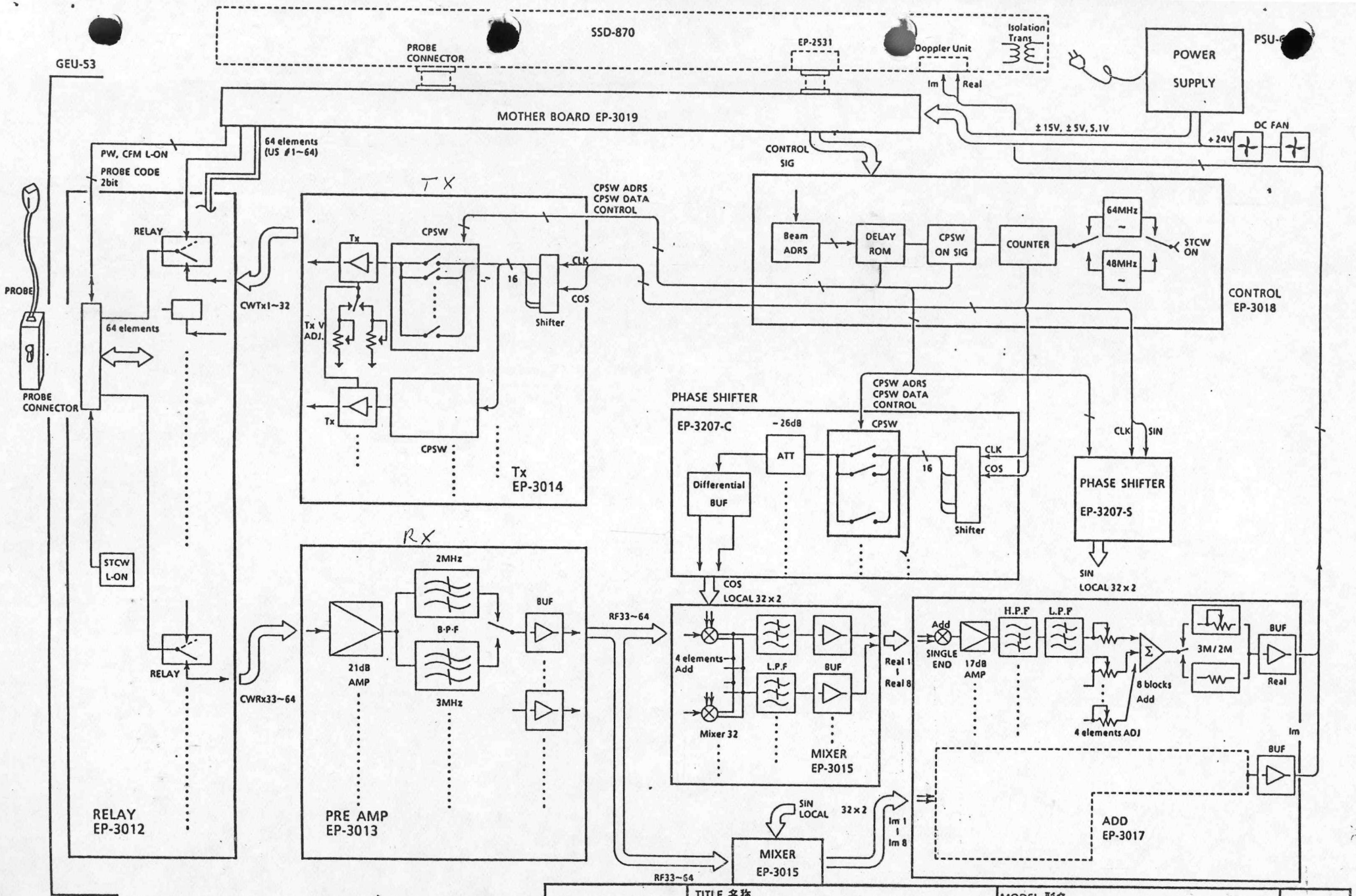


Umschaltung Host Maschine / steerable CW
Power verteilung

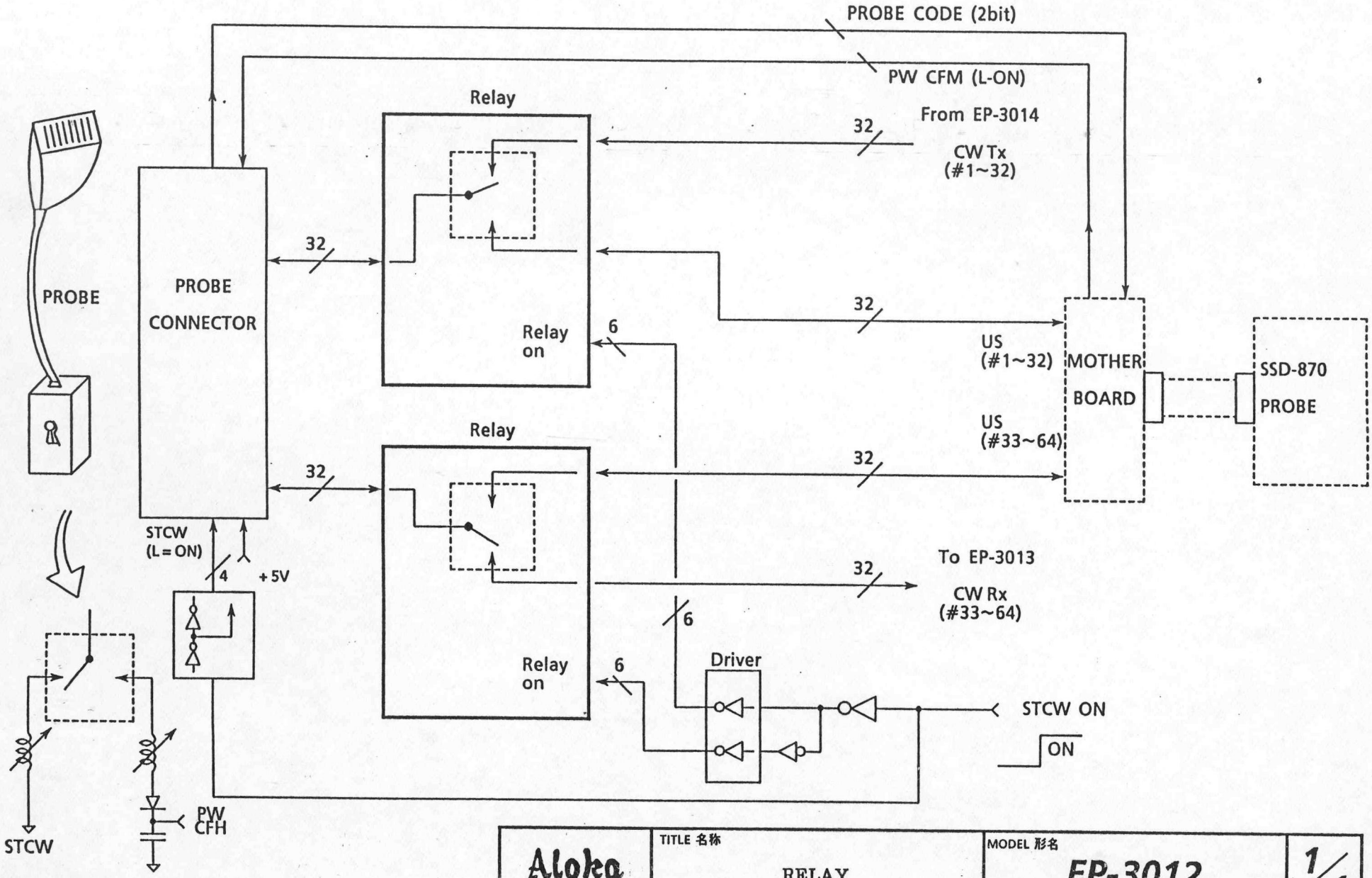


| Aloka | TITLE 名称 RELAY | MODEL 形名 EP-3012 | 1/1 |
|---|---|---|---|

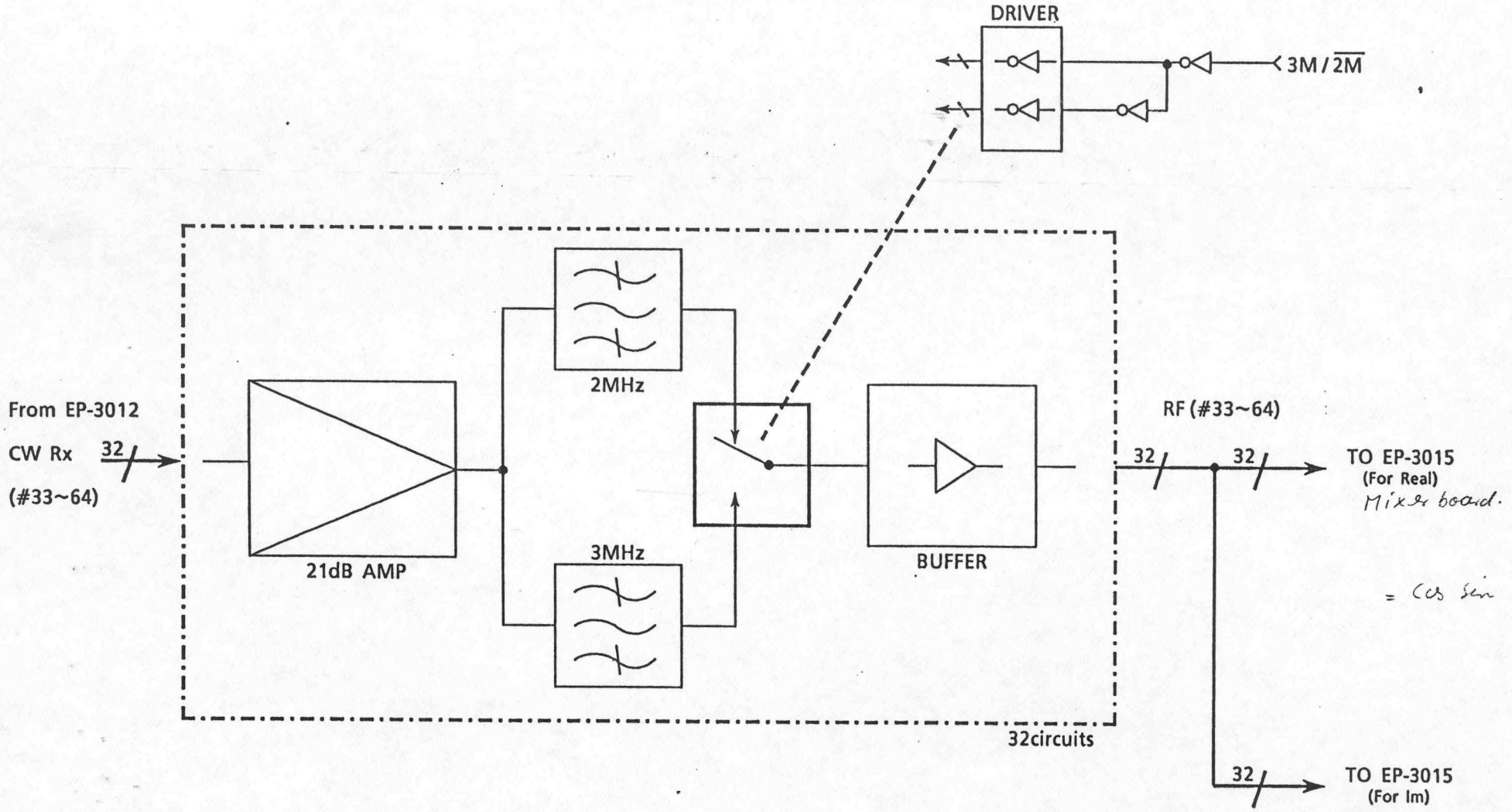


| Aloka | TITLE 名称 PRE AMP | MODEL 形名 EP-3013 | 1/1 |
|---|---|---|---|

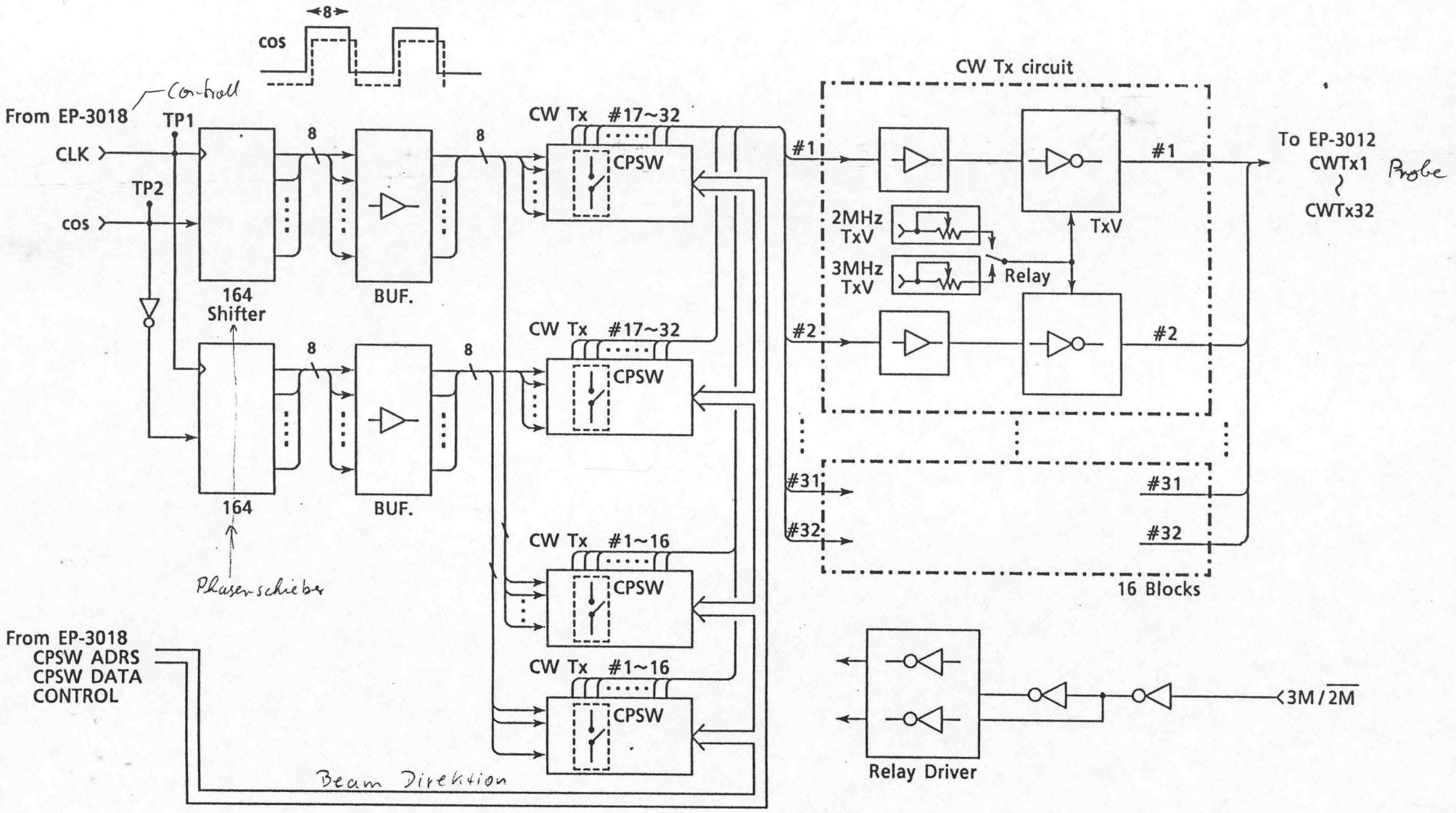


| Aloka | TITLE 名称 Tx | MODEL 形名 EP-3014 | 1/1 |
|---|---|---|---|

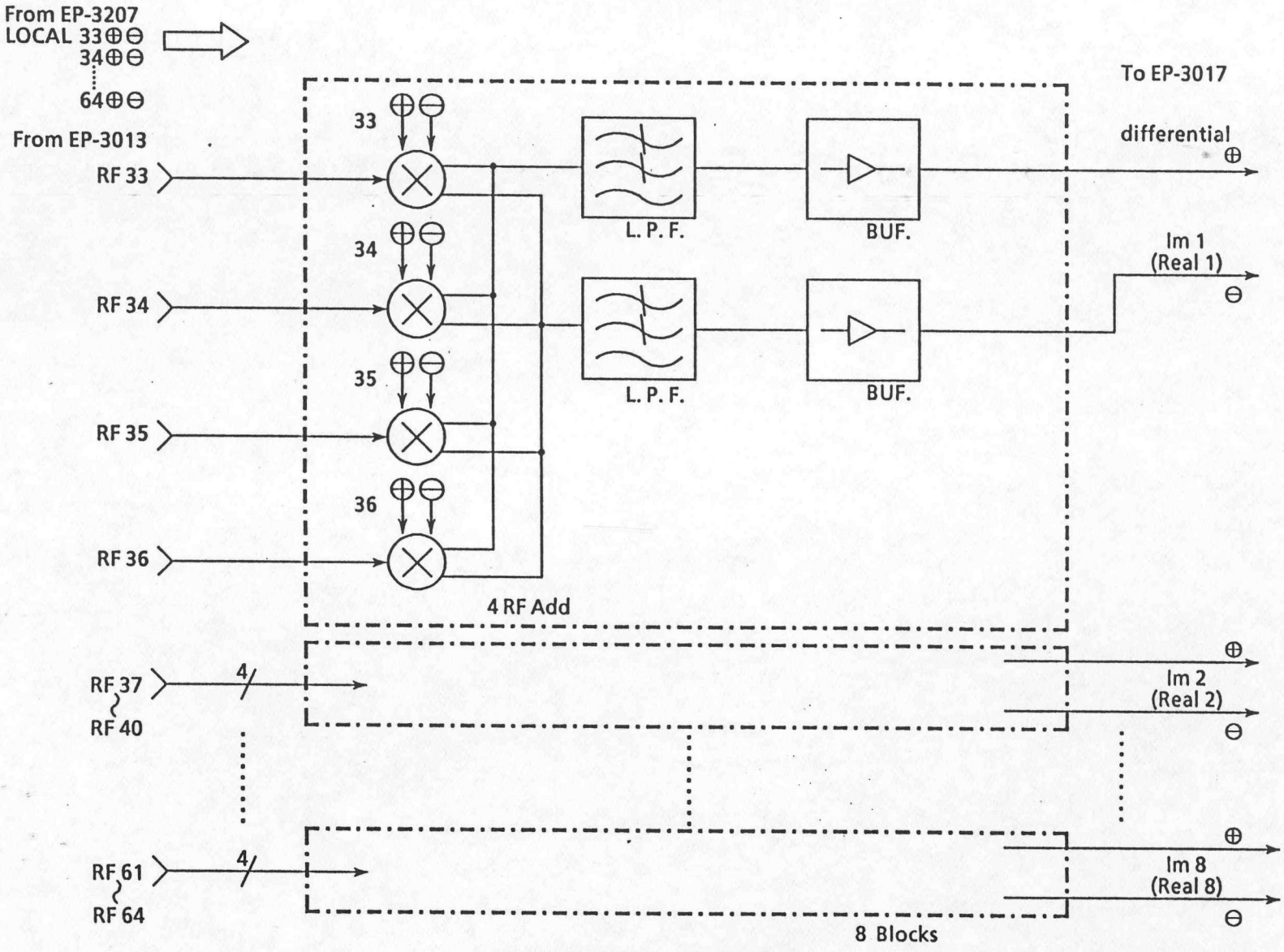


| Aloka | TITLE 名称 MIXER | MODEL 形名 EP-3015 | 1/1 |
|---|---|---|---|

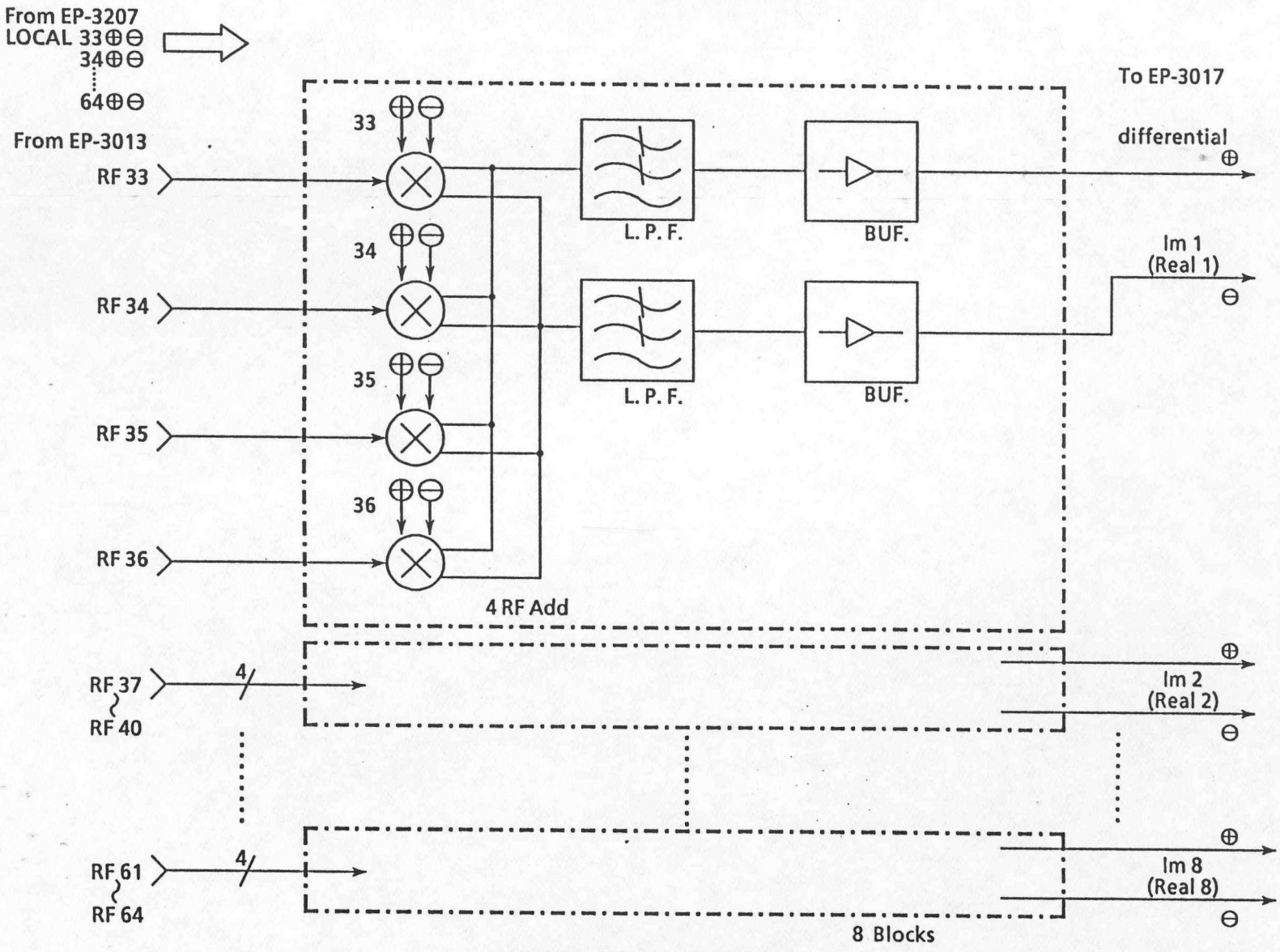


| Aloka | TITLE 名称 MIXER | MODEL 形名 EP-3015 | 1/1 |
|---|---|---|---|

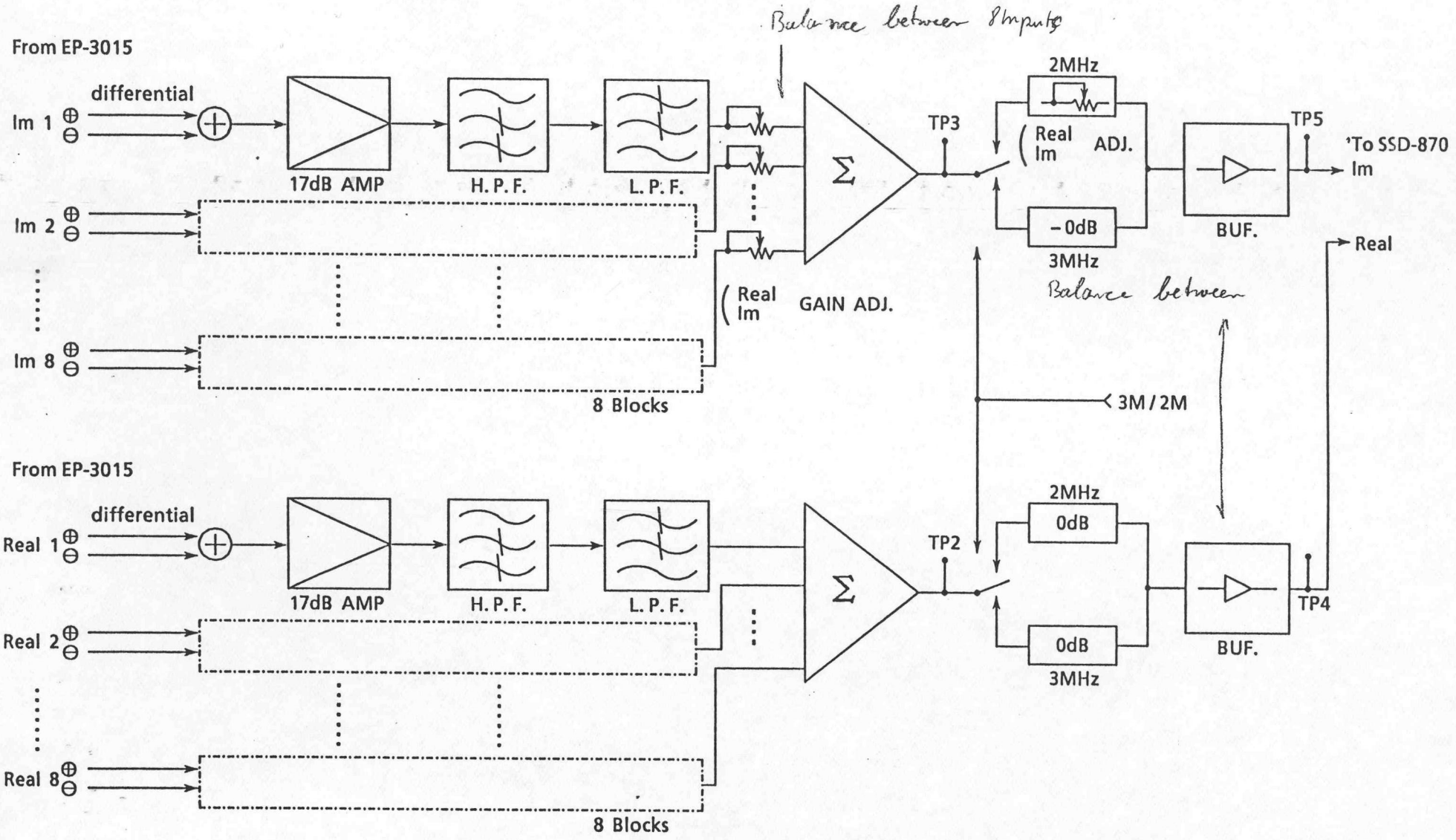


| Aloka | TITLE 名称 ADD | EP-3017 | 1/1 |
|---|---|---|---|

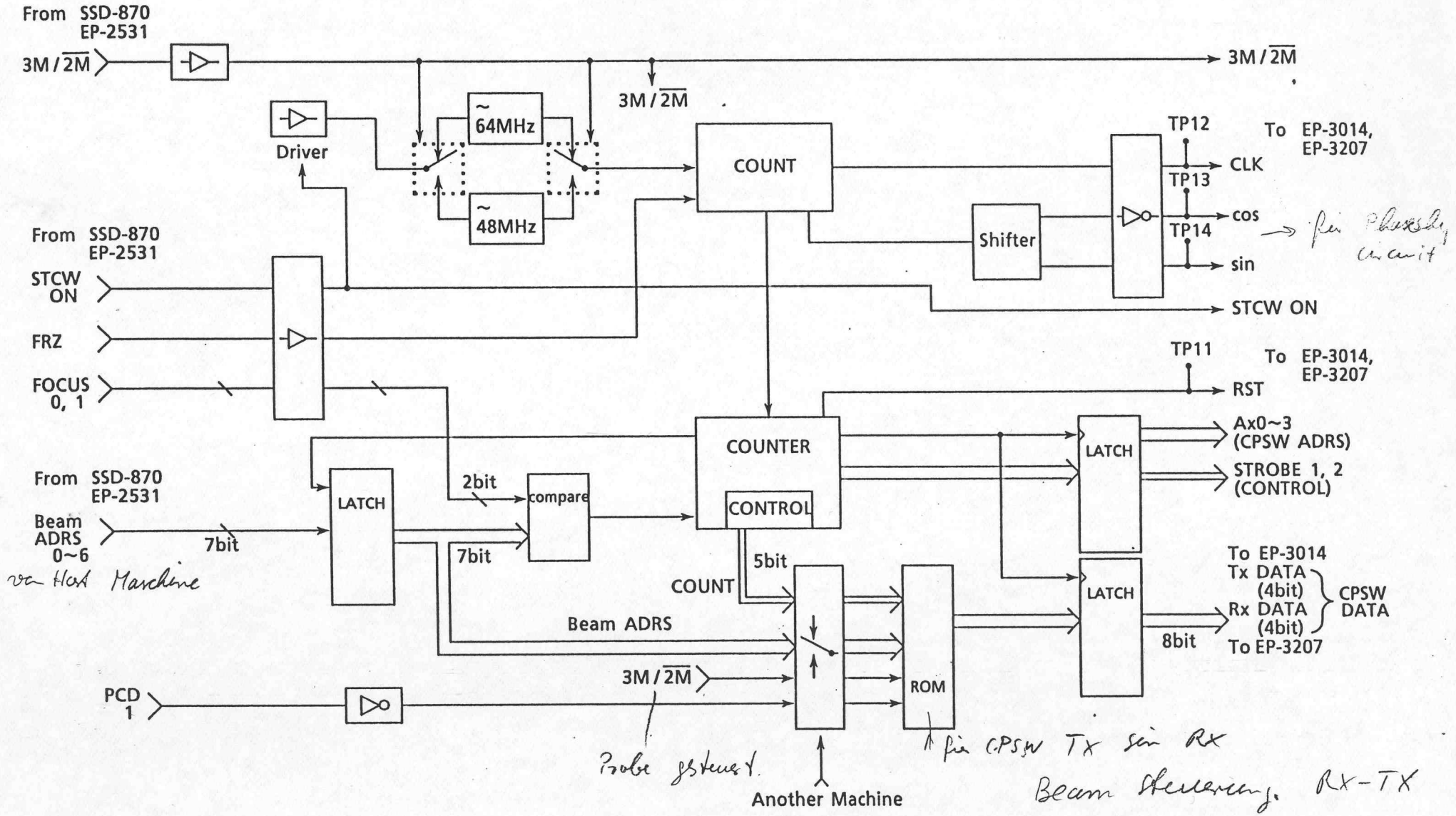


| Aloka | TITLE 名称 CONTROL | MODEL 形名 EP-3018 | 1/1 |
|---|---|---|---|

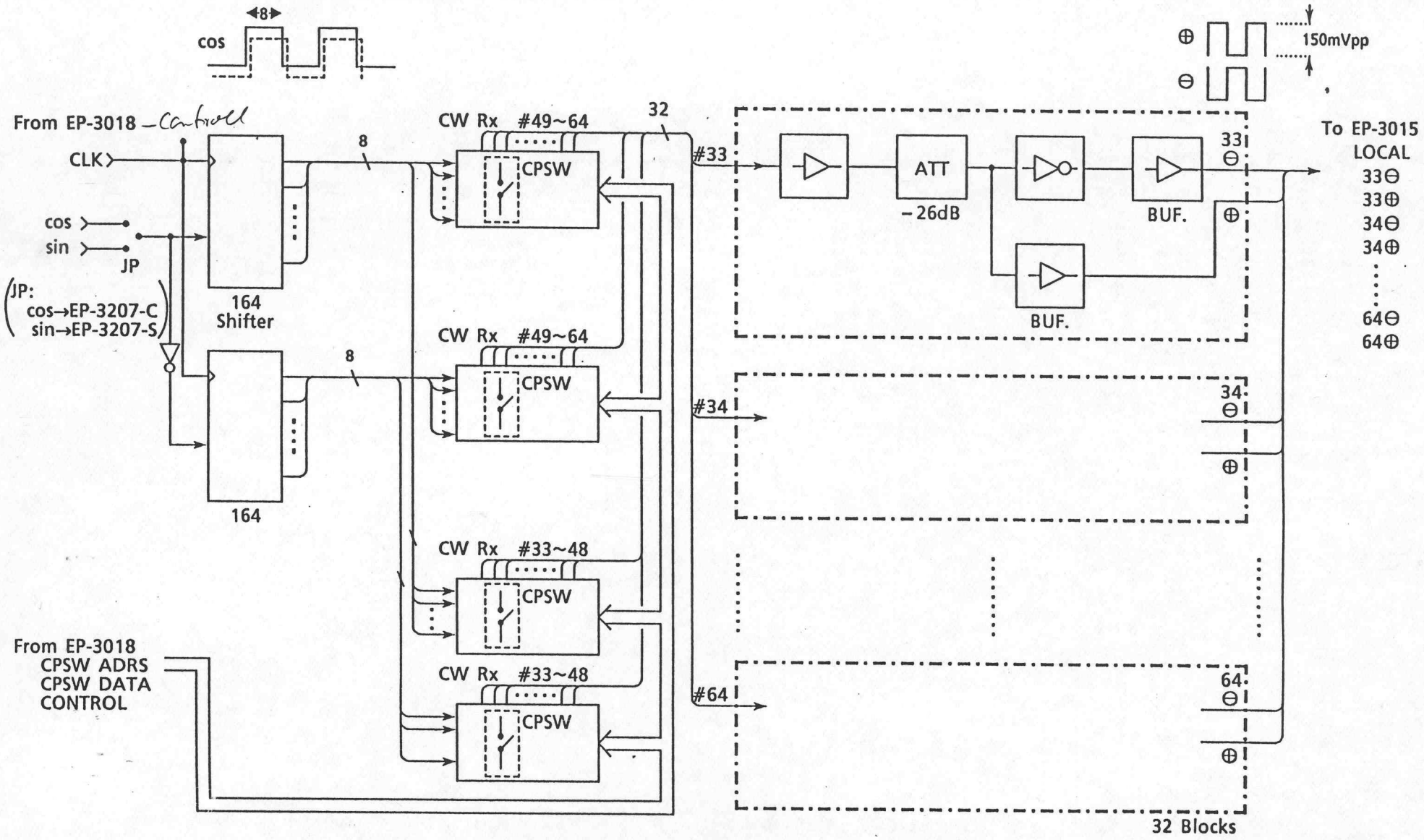


| Aloka | TITLE 名称 PHASE SHIFTER | MODEL 形名 EP-3207 | 1/1 |
|---|---|---|---|

## 1-1 Service Manual

1) This service manual has been prepared for persons in charge of repair at the field.

2) This service manual is compiled according to the following basic principle. "For service, pick out a faulty PCB and replace it with a new PCB."

3) Make the best use of this service manual, making also reference to available technical support information such as "Technical Bulletin".

## 1-2 Contents of this Service Manual

1) This is the equipment in which the surface mount technology (S.M.T.) is incorporated. Some of the printed circuit board (PCB) in this equipment use the surface mount device (S.M.D.).

Any trouble cause by a faulty PCB must be repaired by replacement of PCB as a unit.

2) As above shows at the field, the equipment is repaired by PCB replacement. Therefore this service manual does not include the circuit diagrams of PCB unit. For the function of each PCBs whose circuit diagram is not included, refer to "Section 6 PCB BLOCK DIAGRAM". However, "Cable Connection Diagram", Circuit Diagram of PCB equipped with the panel switches which are easily exchangeable at the field" and "Circuit Diagram composed of general circuit such as TV monitor and Power Supply unit" are described in "Section 7 CIRCUIT DIAGRAM".

3) For changes and modifications of as well as additions to specifications, if any, prompt information will be given to you by means of "Manual change information "which is to be inserted into the manual.

| | |
|---|---|
| Important | Always observe the manner specified for replacement, addition, or deletion of "Manual Change" to prevent missing of necessary information and keeping of erroneous information. |

## 1-3 Construction of This Service Manual

The structure of Service Manual is as follows:

1) Service instructions ---------- SECTION 1~12
2) Parts list ---------- SECTION 13
3) Principle of operation ---------- SECTION 14~16

## 1-4 Contents of Each Section

SECTION 1 How to Use this Service Manual

Describes the purpose of the Service Manual.

SECTION 2 Precautions

Describes general precautions and preparations for maintenance service. Be sure to follow working procedures if mentioned.

SECTION 3 Before repairing

Gives information peculiar to the equipment and care to be taken before starting repair work.

SECTION 4 Disassembling Procedure

Disassembly Procedure Illustrates the disassembly and assembly of main components. Be sure to follow working procedures if specified.

SECTION 5 System Block Diagram

Gives the convenience of grasping flow of major signals and mutual communication between units in the whole system.

SECTION 6 PCB Block Diagrams

Gives outline of individual PCBs, and block diagrams showing test points (TP).

SECTION 7 Schematics

Gives the cable connection diagram including all cables used, the circuit diagram of PCB equipped with switches, and the circuit diagram of TV monitor and Power Supply unit.

SECTION 8 Trouble Shooting

Describes precautions on actual repair work and shows the necessary tools and measuring instruments. Also, includes many hints on primary diagnosis and measures to be taken in the field.

SECTION 9 Alignment Procedure

Gives guides of adjustments of PCBs and units which some PCBs need when they are replaced.

SECTION 10 Performance Check

Describes the procedure of checking for proper operation after repair and provides the forms of check sheet.

SECTION 11 Maintenance Information

Provides technical information about maintenance service. Manual change information, the revision list of this manual, is filed in this section.

SECTION 12 History of Improvement

Describes in tabular form the history of modifications.

SECTION 13 Parts List

Lists the mechanical parts and electrical part which replacement possibility are considered .

SECTION 14 Outline of System

Describes the structure of the equipment seen in broad perspective.

SECTION 15 Principle of Operation (SYSTEM)

Describes the principle of system operation.

SECTION 16 Principle of Operation (Hardware)

Describes the microscopical views of structure and operation of the equipment.

## 1-5 Difference between SSD-680EX and SSD-680STD

### 1-5-1 Introduction

This SSD-680EX / SSD-680STD SERVICE MANUAL is mainly described about SSD-680EX. For the maintenance of SSD-680STD, refer to 1-5-2 and 1-5-3 to understand the difference.

### 1-5-2 Difference in specification

| | SSD-680EX | SSD-680STD |
|---|---|---|
| Doppler function (PW Dop、CW Dop) | Standard | Option UGR-680STD |
| Color function | Standard | Option CFM-680STD |
| Viewing TV monitor | Color monitor | B/W monitor (When optional color function is added, color monitor is used.) |

SSD-680STD becomes the same specification after adding optional Doppler function (UGR-680STD) and optional Color function.

### 1-5-3 Difference in model name (Difference only)

| | SSD-680EX | SSD-680STD |
|---|---|---|
| MAIN UNIT | USI-131 | USI-132 |
| Viewing TV monitor | NTSC : IPC-1010<br>PAL : IPC-1010V | NTSC : IP-1230C-TH<br>PAL : IP-1230CV-TH |
| Main body | PSC-118 | PSC-120 |
| Tx/Rx unit | GEU-64 | GEU-65 |
| MAIN AMP & COLOR ITF board | EP-3461* -1 | EP-3461* -2 (Unnecessary parts are not mounted.) |
| DSC unit | UIM-325 | UIM-326 |
| COLOR D/A board | EP-2651* -4 | EP-2651* -3 (Unnecessary parts are not mounted.) |
| | | The below Color boards are not used.<br>COLOR FLOW PROCESSOR EP-5100<br>COLOR LINE BUFFER EP-3115<br>COLOR POST PROCESS EP-3114<br>COLOR MEMORY VEL EP-2213<br>COLOR MEMORY VAR EP-2213-1<br>COLOR CINE MEMORY EP-3238<br>VIDEO ITF EP-3443 |
| Doppler unit | UGR-680EX | Option<br>Model: UGR-680STD<br>(Components are same as UGR-680EX.) |

Note 1 : The difference between GEU-64 and GEU-65 is MAIN AMP & COLOR ITF board only.

Note 2 : CFM-680STD includes Color TV monitor, EP-3461* -1, EP-2651* -4, and Color boards for DSC unit.

## 2-1 Precautions Against Electrical Hazards to Serviceman

When disassembling the equipment after checking it for trouble symptom, give care to the following:

1) Be sure to unplug the equipment before disassembly.
2) Be sure to turn off the main switch on the equipment when removing electrical parts such as PCBs, probe, and cable.

## 2-2 Precautions Against Mechanical Hazards to Serviceman

When disassembling the equipment, give care to the following to protect serviceman from hazards:

1) Keep the working environment neat.
2) Wear working grooves to protect your hands from getting injured by burrs on the unit and casing.
3) Use only proper tools suited to work being made.
4) Be sure to observe the specified disassembly procedure.
5) Take sufficient care not to damage component with undue load.

## 2-3 Precautions Against Germ Hazards to Serviceman

1) When it is necessary to touch the equipment, options and/or other peripheral devices at a customer who uses intracorporeal (transesophageal, transvaginal, transrectal) probes that need sterilization, take special care to protect your hands against germs, irrespective of the usage of the equipment: whether it is used in the operation room or not.
2) Service tools are subject to germ pollution in hospitals and, therefore, need periodical sterilization.
3) Be careful not to directly touch anything assumable to have germ pollution. If necessary, ask the customer for effective protection against germs.

## 2-4 Precautions for Keeping Electrical Safety

1) Be sure to ground the equipment securely.

2) Perfectness in grounding, screw tightening, and cover installation is essential. Negligence of it could cause a possibility of leak current from outer fitting which may lead to serious damage to a patient being diagnosed.

## 2-5 Precautions for Keeping Mechanical Safety

Take care to the following to prevent the equipment from being damaged or broken during disassembly and reassembly work.

1) Be sure to observe the specified disassembly procedure.

2) Take care not to damage component parts by undue load.

3) When reassembling the equipment, carefully check every part for loosening, distortion and creak.

4) Use only the specified screws and nuts. Using any other screws and/or nuts would affect not only mechanical performance, but also electrical performance of the equipment.

## 2-6 Precautions for Keeping Chemicals Safety

Whenever grease, oil or other chemicals is used for maintenance service, options and/or peripheral devices, be sure to clean the equipment and/or devices after service work.

## 2-7 Preparation to be Made at Service Center

1) When called by a customer on the telephone, note the following:

- Model name of equipment
- Serial number of equipment
- Name of hospital
- Telephone number
- Name of person in charge
- Detail of trouble symptom as far as possible
- State of connection to optional devices

2) Go over the "Technical Bulletin" to see whether the complained trouble can be mended by means of regular repairing method.

## 2-8 Care to be Taken in the Field

1) Check for trouble symptoms.

2) Check for connection to optional devices and other peripheral devices.

3) Record the contents of the battery backup memory.

4) After working, reset the equipment according to the above mentioned contents of memory.

5) After completion of work, put back the peripheral devices to the original condition.

## 3-1 Resetting the Backup Memory (RAM)

A backup feature is available to normally store the user's settings. In normal use, it will not be necessary to erase all the information so stored. It is necessary, however, to reset the backup memory with reference to the figure given below in any of the following events. This method cannot be taken when the system cannot be started up or locking up, because this resetting procedure is based on the software.

CAUTION This resetting the backup memory will erase the following information,

- All of the presettings, except INITIALIZE data

To set them all over again after resetting the memory, it is necessary to record the set information by the use of a printer, such as "Video Printer".
Do not use the customer's printer, meanwhile, before obtaining consent to do so.

1) When the software has been altered for an upgrade or for any other reasons,
2) When unnecessary (abnormal) character or codes is displayed in the data which have been set by user.

Press [PRE SET] and [6] at the same time.

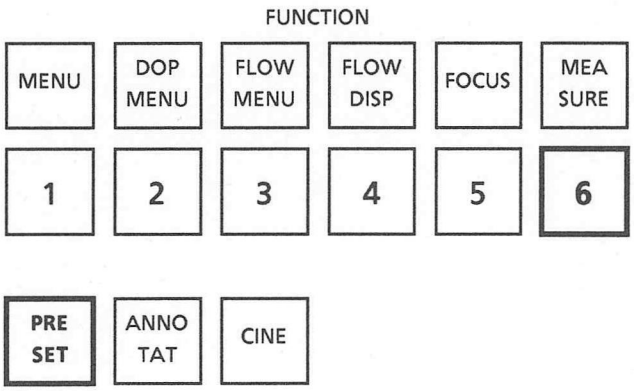

## 3-2 Display method for the Color Test Pattern

The color test pattern display feature is available on this system, and can be used for the diagnosis to find the defectiveness on the color display system.

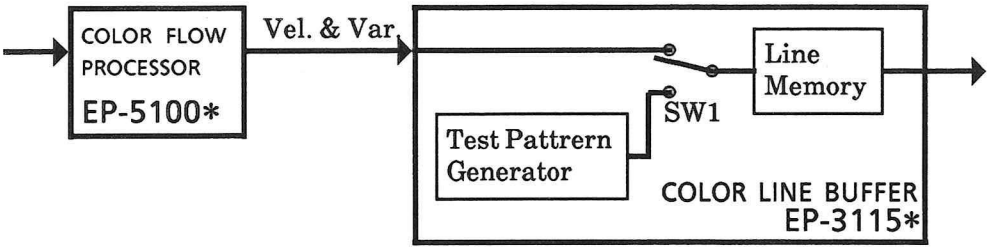


Process 1 Set the SW1 which is equipped on EP-3115* COLOR LINE BUFFER board in DSC unit named UIM-325, to right side as the following figure.

Process 2 Turn on the FLOW mode by the operation panel.

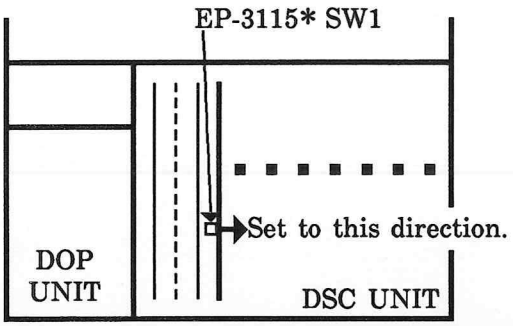


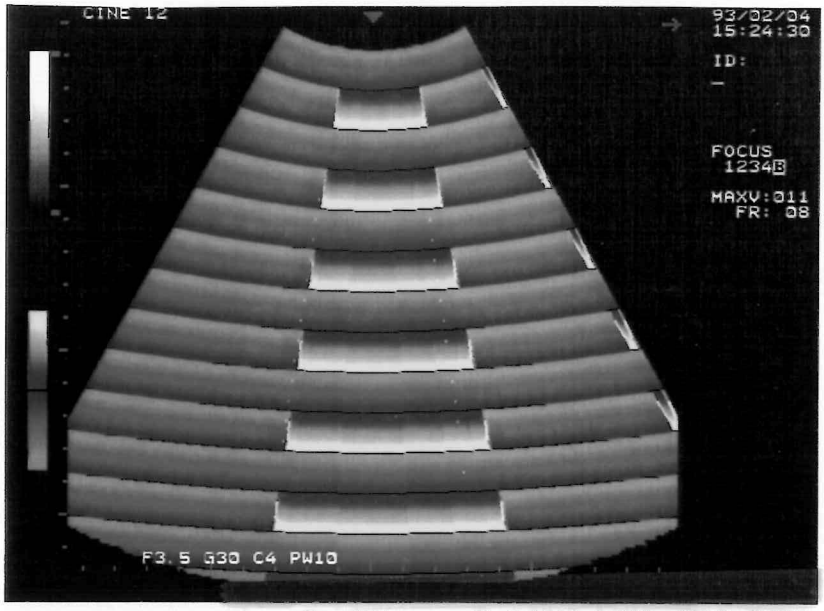


Condition B GAIN : MIN, STC : MIN

CAUTION After checking the operation with the color test pattern, reset the switch setting to the original position without fail.

## 3-3 Care on Handling of Surface Mount Device (SMD), and Surface Mount Technology (SMT) PCBs

It is an Aloka's policy that neither repair nor modification of PCBs used for S.M.D. is made in the field as a rule because of the following reasons:

### The gaps between IC pins are very narrow

Fine solder chips would cause a short circuit and dirt from the hand would cause corrosion.

### PCBs are fragile on impact

If the ROM is forced into the S.M.D. on a hard base when replacing the ROM, an undue force will apply to PCBs, causing various troubles, such as:

- Damage to PCB intermediate-layer patterns,
- Peeling of chip devices (resistor, capacitor, diode, etc.)
- Damage to a junction between electrode and internal element of chip devices,
- Peeling of patterns (especially those for mounting the parts) together with chip devices since those patterns are rather fragile compared with PCBs used before now, and
- Damage to parts on the reverse side in the case of PCBs of both-side mounting type.

In addition to the above, the S.M.D. chip would become impossible of reuse once it is removed from a PCB (because of damage due to thermal stress). So, do not try to replace the chip temporally in the field even if a defective part can be located.

If it is necessary to touch those PCBs because of software version up or another reason, however, the matters mentioned above should be taken into careful consideration.

### The artwork of PCB is also narrow

To prevent the secondary damage, the matters above should be taken into careful consideration.

## 3-1 Repair work on the description of Service Manual

The typical processes for the repair work are shown as the Flow Chart on the next page. Do the repair work according to this procedure. In the case of modification of the Technical Bulletin or Upgrade Kit, see the next item 3-2.

Each procedures of flow chart are numbered to refer its detail shown from page 3-3. Furthermore, the Flow Chart and its explanation show the time when each section of service manual are required on repair work. This is a guide for the usage of service manual.

The service manual is very important for the repair work, especially readjustment and performance check after completion of repair work. This is to keep the safety and quality of equipment. If you make them, you have to describe that the treatment has been done according to the applied section of service manual, on the repair report or the like.

The circled numbers shown in the Flow Chart on next page, are corresponded to the procedure number shown from page 3-3.

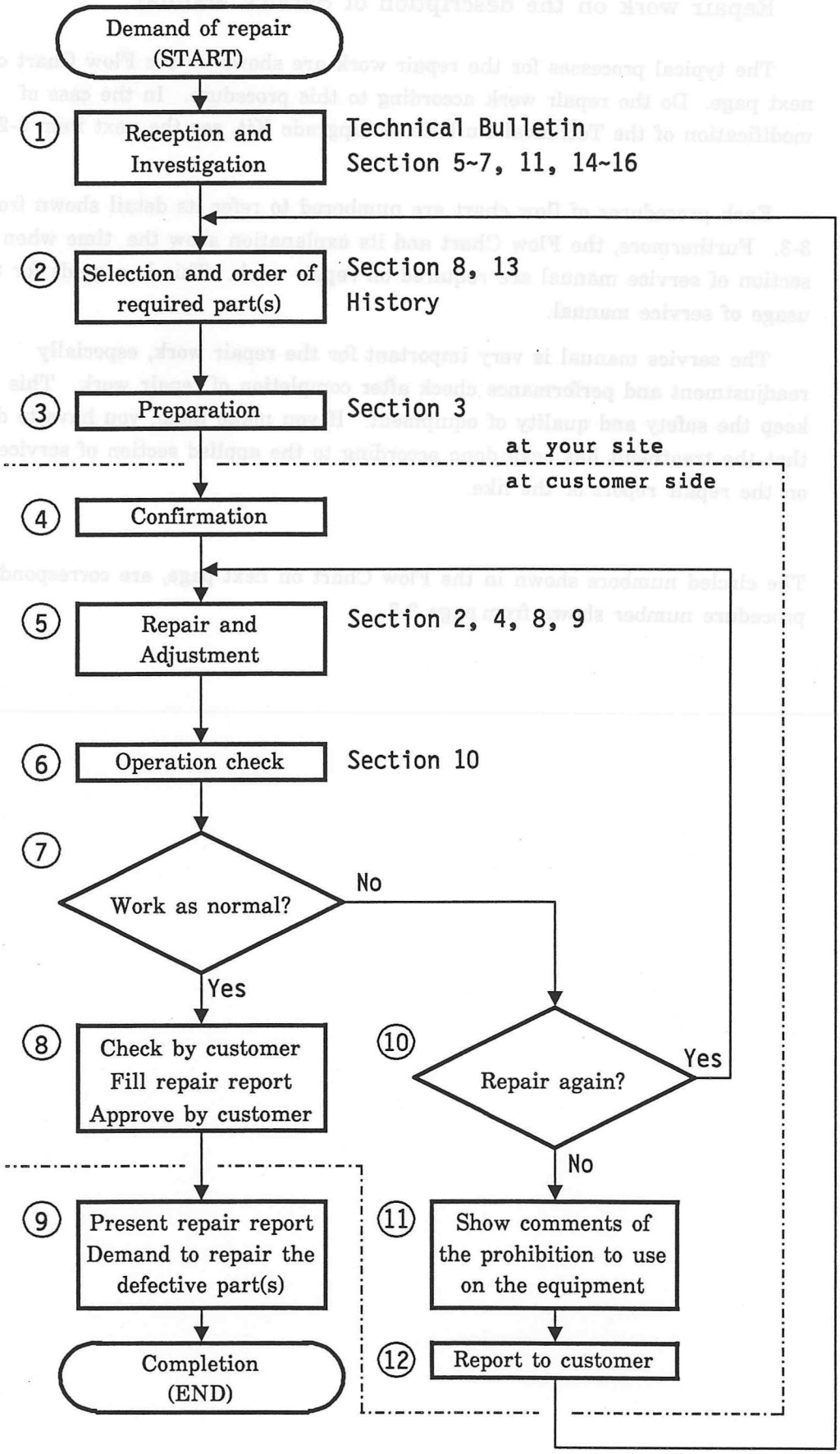
Demand of repair
(START)
1
Reception and Investigation
Technical Bulletin
Section 5~7, 11, 14~16
2
Selection and order of required part(s)
Section 8, 13
History
3
Preparation
Section 3
at your site
at customer side
4
Confirmation
5
Repair and Adjustment
Section 2, 4, 8, 9
6
Operation check
Section 10
7
Work as normal?
No
Yes
8
Check by customer
Fill repair report
Approve by customer
10
Repair again?
Yes
No
9
Present repair report
Demand to repair the defective part(s)
11
Show comments of the prohibition to use on the equipment
Completion
(END)
12
Report to customer

## Procedure 1 Reception of repair and investigation

Accept the repair request from the customer or distributor. At this time, the following points have to be confirmed and checked,

- Model name/number, and serial number
- Name of customer, address, phone number, and name of person in charge
- Configuration of the connection of peripheral devices
- Software version or the like shown on the boot up display (if possible)
- Detail of phenomenon appeared on the function of equipment

Make an examination what circuit may be defective as the function of equipment based on the above information. If you need to know about the basic operation and special information for the maintenance, refer to the following sections, or ask to the *Technical Support*,

- Section 5 System Block Diagram
- Section 6 PCB Block Diagram
- Section 7 Schematics
- Section 11 Maintenance Information
- Section 14 System Outline
- Section 15 Principle of System Operation
- Section 16 Principle of Hardware Operation

The reported phenomenon may be the original problem on the equipment. Because, refer to the *Technical Bulletin* separately issued to check it whether defectiveness or not. If it has been reported as the original problem, make a work according to the Technical Bulletin.

## Procedure 2 Selection of required parts and order

If you find the doubtful circuit, order the necessary parts. Then check the delivery date and decide the date to visit on the consultation with the customer. For the selection and order of parts, refer to the following sections,

- Section 8 TROUBLESHOOTING
- Section 13 PARTS LIST

For the electrical parts such as PCB, check the history information on the *HISTORY* of this equipment separately issued.

## Procedure 3 Preparation of visiting the customer

Check the required tools, measuring devices and parts to be replaced before the visiting the customer. Then check the special information for the equipment reference with the following section,

- Section 3 BEFORE REPAIR

## Procedure 4 Confirmation of phenomenon

Confirm the appeared phenomenon and condition to happen it with the customer. If you don't know about the operation of equipment, refer to the *Operation Manual* attached to the equipment.

## Procedure 5 Repair and readjustment

Repair the defective circuit with the brought parts. For the repair work, read the following section carefully,

- Section 2 PRECAUTIONS

And, examine the trouble reason depending on the situation with following section,

- Section 8 TROUBLESHOOTING

The electrical or mechanical readjustment may be requested depending on the replaced parts. Because, refer to the following section after completion of repair,

- Section 9 ADJUSTMENT

## Procedure 6 Operation check

Check the system behavior to keep its condition as same as before in trouble, reference with the following section. Be sure to do according to the description because check items are depending on the portion to be treated.

- Section 10 PERFORMANCE CHECK

## Procedure 7 Judgment of the operation quality

If the result of "Procedure 6" is passed to the all standards, do the next "Procedure 8". On the other side, if not, make a judgment of "Procedure 10".

## Procedure 8 Confirm by customer, make repair repot and approve

Reconfirm the solution of trouble phenomenon with the customer. Then make a repair report and obtain approval of customer.
The repair report shows not only the treatment but also the method of readjustment and operation check. If they have been done according to the service manual, the followings have to be shown,

*"Readjusted according to the Section 9 of service manual."*
*"Checked according to the Section 10 of service manual, and passed."*

## Procedure 9 Presentation of report and order to repair parts

Fill the repair report with necessary item, and present it according to the certain procedure.
If the defective parts that trouble cause included is available to use again by repair, make an order to do. If you cannot judge whether the part can be used again or not, ask to the *Technical Support.*

## Procedure 10 Judgment of possibility to repair again

As the result of judgment on "Procedure 7", if the trouble is not solved, judge the possibility to make the repair work again.
If available, return to "Procedure 5" and continue to work.
If unavailable, go to "Procedure 11".

## Procedure 11 Indication of the prohibition to use

As the result of judgment on "Procedure 10", if you judge that it is impossible to continue the repair work at this time, indicate that the equipment is still out of order, and also show the prohibition to use, on the equipment.

## Procedure 12 Report to the customer

Report the reason why the trouble cannot be solved to the customer. Then consult about the plan of next repair work.
And do the same way from "Procedure 2".

## 3-2 Modification work on the description of Service Manual

The typical processes for the modification work are shown as the Flow Chart on the next page. Do the modification work according to this procedure. In the case of repair work, see the previous item 3-1.

Each procedures of flow chart are numbered to refer its detail shown from page 3-9. Furthermore, the Flow Chart and its explanation show the time when each section of service manual are required on modification work. This is a guide for the usage of service manual.

The service manual is very important for the modification work, especially readjustment and performance check after completion of modification work. This is to keep the safety and quality of equipment.

The circled numbers shown in the Flow Chart on next page, are corresponded to the procedure number shown from page 3-9.

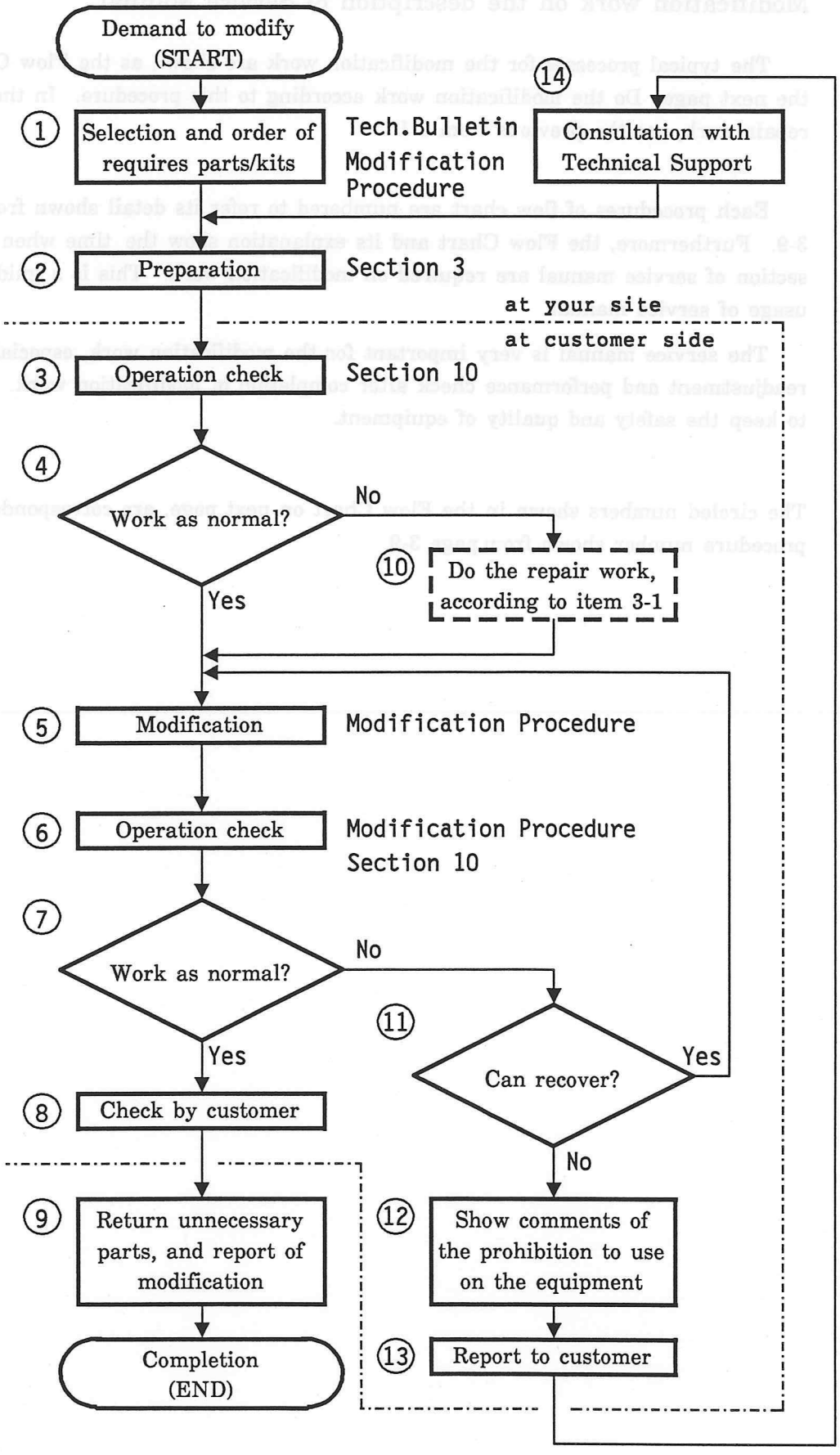
Demand to modify (START)
14
1
Selection and order of requires parts/kits
Tech.Bulletin
Modification Procedure
Consultation with Technical Support
2
Preparation
Section 3
at your site
at customer side
3
Operation check
Section 10
4
Work as normal?
No
10
Do the repair work, according to item 3-1
Yes
5
Modification
Modification Procedure
6
Operation check
Modification Procedure
Section 10
7
Work as normal?
No
11
Can recover?
Yes
Yes
8
Check by customer
No
9
Return unnecessary parts, and report of modification
12
Show comments of the prohibition to use on the equipment
Completion (END)
13
Report to customer

## Procedure 1 Selection of required parts / kits and order

Accept the modification request from the customer, distributor or person in charge of sales. At this time, the following points have to be confirmed and checked to decide the parts and kits,

- Document name that announced the modification or kit requested
- Model name/number, and serial number
- Name of customer, address, phone number, and name of person in charge
- Configuration of the connection of peripheral devices
- Software version or the like shown on the boot up display

Make an examination what parts or kits are required based on the above information. For the selection, refer to the following document separately issued, or ask to the *Technical Support*,

- *Technical Bulletin*

To confirm the detail of modification, see the *Modification Procedure* attached with applied *Technical Bulletin.*

Depending on the modification, hardware, or software, the other modification may be required. Check it with the *Technical Bulletin.*

Then, confirm the delivery date of required parts or kits, and decide the date to visit on the consultation with the customer.

## Procedure 2 Preparation of visiting the customer

Check the required tools, measuring devices and parts or kits to be used before the visiting the customer. Then check the special information for the equipment reference with the following section and document,

- Section 3 BEFORE REPAIR
- *Technical Bulletin* and/or *Modification Procedure*

## Procedure 3 Operation check before modification

On the basis of work, the modification to the defective equipment is prohibited. Because, before modification work, check the behavior of equipment whether normal or not according to following section and document,

- Section 10 PERFORMANCE CHECK
- *Operation Manual*

## Procedure 4 Judgment of the operation quality

If the result of "Procedure 3" is passed to the all standards, do the next "Procedure 5". On the other side, if not, go to "Procedure 10".

## Procedure 5 Modification work

Do the modification work according to the following document,

- *Modification Procedure* attached with kit or *Technical Bulletin*

## Procedure 6 Operation check after modification

Check the system behavior to keep its condition as same as before the modification, reference with the following section. Be sure to do according to the description because check items are depending on the portion to be treated.

- Section 10 PERFORMANCE CHECK
- *Modification Procedure*

## Procedure 7 Judgment of the operation quality

If the result of "Procedure 6" is passed to the all standards, do the next "Procedure 8". On the other side, if not, make a judgment of "Procedure 11".

## Procedure 8 Confirmation by customer

Reconfirm any functions of equipment with the customer. Then, if need, introduce and explain about the new functions and specification added by this modification.
Furthermore, if need, make a report to be approved by the customer. The report shows not only the treatment but also the method of operation check. If it has been done according to the service manual, the following has to be shown,

*"Checked according to the Section 10 of service manual, and passed."*

## Procedure 9 Return of unnecessary parts and report of completion

According to the *Technical Bulletin*, return the unnecessary replaced or unused parts as soon as possible if suggested.

And, if the report of modification is suggested on the same document, report it with the information required.

## Procedure 10 Work for the abnormal behavior of equipment

On the result of judgment in "Procedure 4", if the equipment does not work normal, solve the problem according to item 3-1 "Repair work on the description of service manual" shown in this section.

When the problem is solved, return to "Procedure 5" of this item and continue to do the modification work.

## Procedure 11 Judgment of possibility to recover

As the result of judgment on "Procedure 7", if the problem has been made by this modification, judge the possibility to recover it.
If available, return to "Procedure 5" and continue to work.
If unavailable, go to "Procedure 12".

## Procedure 12 Indication of the prohibition to use

As the result of judgment on "Procedure 11", if you judge that it is impossible to recover at this time, indicate that the equipment is the out of order, and also show the prohibition to use, on the equipment.

## Procedure 13 Report to the customer

Report to the customer that the modification has not been completed because of the problem on the modification work. Then make a schedule to fix and complete it.

## Procedure 14 Asking to the Technical Support

Report to the *Technical Support* about the happening of problem on the modification work, make an examination to solve and order the additional parts. Before the asking, check the following points,

- Name of kit, or the issue number of *Technical Bulletin* showing the modification
- Model name/number, and serial number
- Configuration of the connection of peripheral devices
- Software version or the like shown on the boot up display
- Indication of equipment such as Modification or History Label
- Detail of phenomenon appeared on the function of equipment

## 3-3 Resetting the Backup Memory (RAM)

A backup feature is available to normally store the user's settings. In normal use, it will not be necessary to erase all the information so stored. It is necessary, however, to reset the backup memory with reference to the figure given below in any of the following events. This method cannot be taken when the system cannot be started up or locking up, because this resetting procedure is based on the software.

CAUTION This resetting the backup memory will erase the following information,

- All of the presettings, except INITIALIZE data

To set them all over again after resetting the memory, it is necessary to record the set information by the use of a printer, such as "Video Printer".
Do not use the customer's printer, meanwhile, before obtaining consent to do so.

1) When the software has been altered for an upgrade or for any other reasons,
2) When unnecessary (abnormal) character or codes is displayed in the data which have been set by user.

Press [PRE SET] and [6] at the same time.

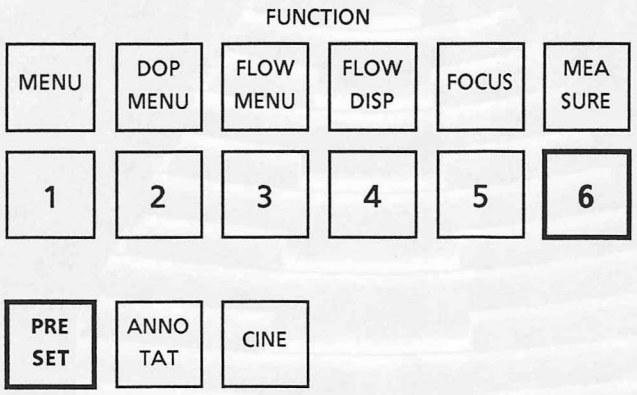

## 3-4 Display method for the Color Test Pattern

The color test pattern display feature is available on this system, and can be used for the diagnosis to find the defectiveness on the color display system.

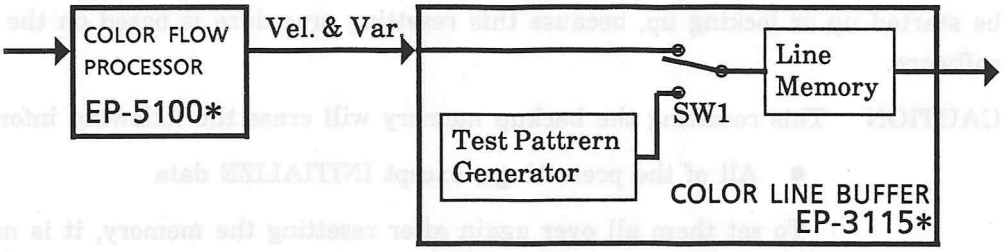


Process 1 Set the SW1 which is equipped on EP-3115* COLOR LINE BUFFER board in DSC unit named UIM-325, to right side as the following figure.

Process 2 Turn on the FLOW mode by the operation panel.

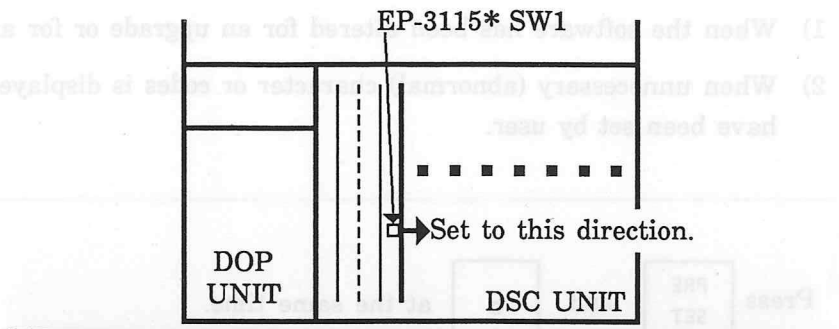


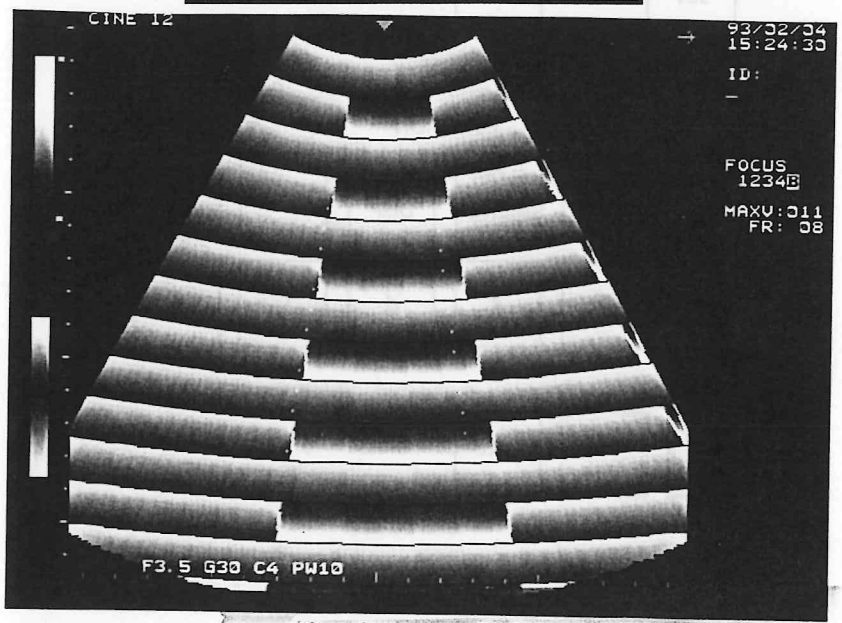


Condition B GAIN : MIN, STC : MIN

CAUTION After checking the operation with the color test pattern, reset the switch setting to the original position without fail.

## 3-5 Care on Handling of Surface Mount Device (SMD), and Surface Mount Technology (SMT) PCBs

It is an Aloka's policy that neither repair nor modification of PCBs used for S.M.D. is made in the field as a rule because of the following reasons:

The gaps between IC pins are very narrow.

Fine solder chips would cause a short circuit and dirt from the hand would cause corrosion.

PCBs are fragile on impact.

If the ROM is forced into the S.M.D. on a hard base when replacing the ROM, an undue force will apply to PCBs, causing various troubles, such as:

- Damage to PCB intermediate-layer patterns,
- Peeling of chip devices (resistor, capacitor, diode, etc.)
- Damage to a junction between electrode and internal element of chip devices,
- Peeling of patterns (especially those for mounting the parts) together with chip devices since those patterns are rather fragile compared with PCBs used before now, and
- Damage to parts on the reverse side in the case of PCBs of both-side mounting type.

In addition to the above, the S.M.D. chip would become impossible of reuse once it is removed from a PCB (because of damage due to thermal stress). So, do not try to replace the chip temporally in the field even if a defective part can be located.

If it is necessary to touch those PCBs because of software version up or another reason, however, the matters mentioned above should be taken into careful consideration.

The artwork of PCB is also narrow

To prevent the secondary damage, the matters above should be taken into careful consideration.

# SSD-680EX Disassembling Instructions


1. Parts Identification

2. Individual Units Layout

3. Dismounting Flowchart

4. How to Remove Covers

5. How to Open Panel Escutcheon

6. How to Pull out PC Board of TX / RX Unit (GEU-64) and How to Remove Unit

7. How to Pull out PC Board of DSC Unit (UIM-325) and How to Remove Unit

8. How to Pull out PC Board of Doppler Unit (UGR-680) and How to Remove Unit

9. How to Remove Power supply Unit (PSU-S680C)

10. How to Remove PC Board

11. How to Remove Panel Frame and PC Board of Operation Panel

12. How to Remove Observation Monitor Unit (IPC-1010 /-1230)

13. How to Remove Monitor Arm (L-Ki-490 /-501)

14. How to Remove Top Cover

15. How to Remove VTR Remote Controller Rack

16. How to Remove Panel Lower Cover and Speaker Unit

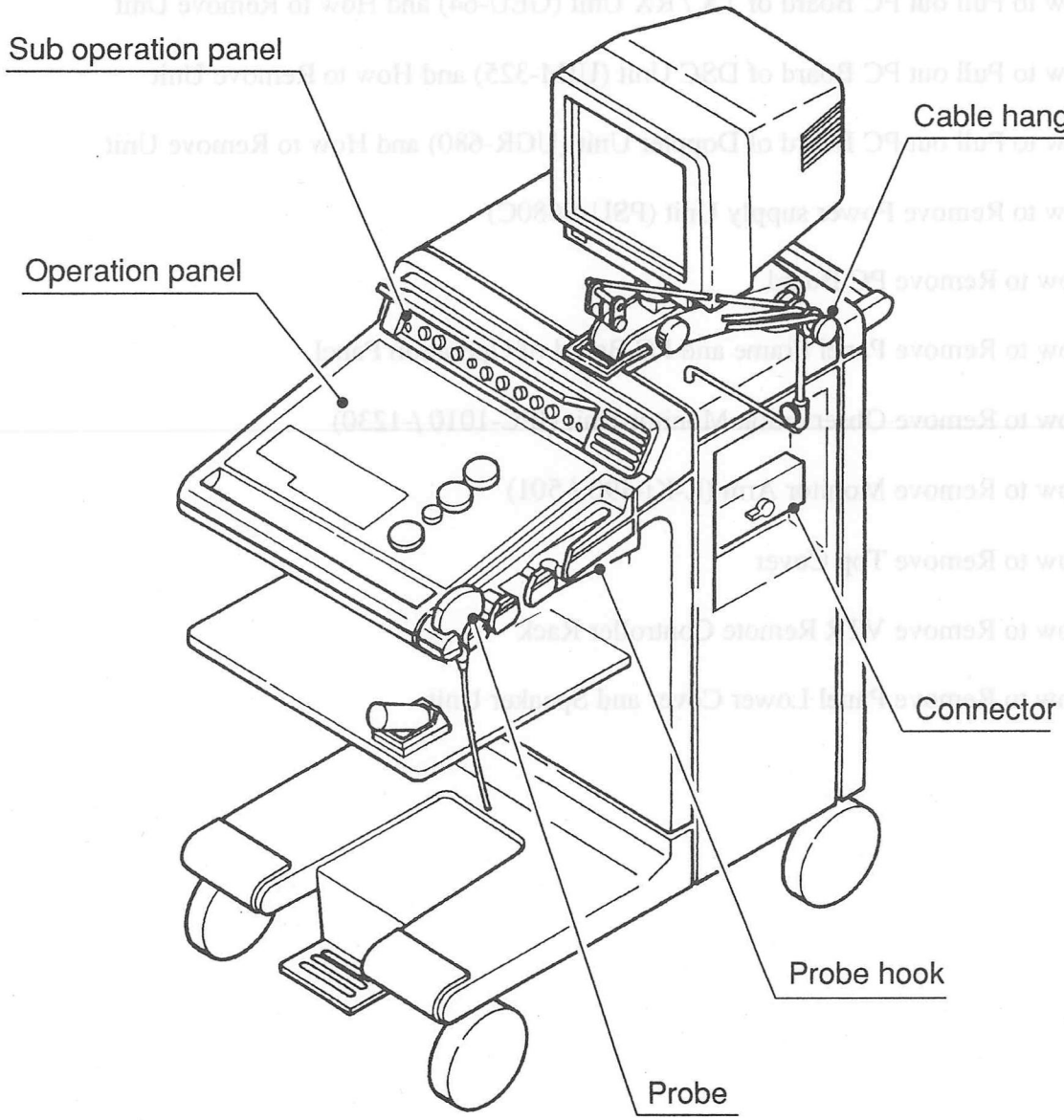
Sub operation panel
Operation panel
Cable hanger
Connector
Probe hook
Probe

Fig. 1

## 2. Individual Units Layout

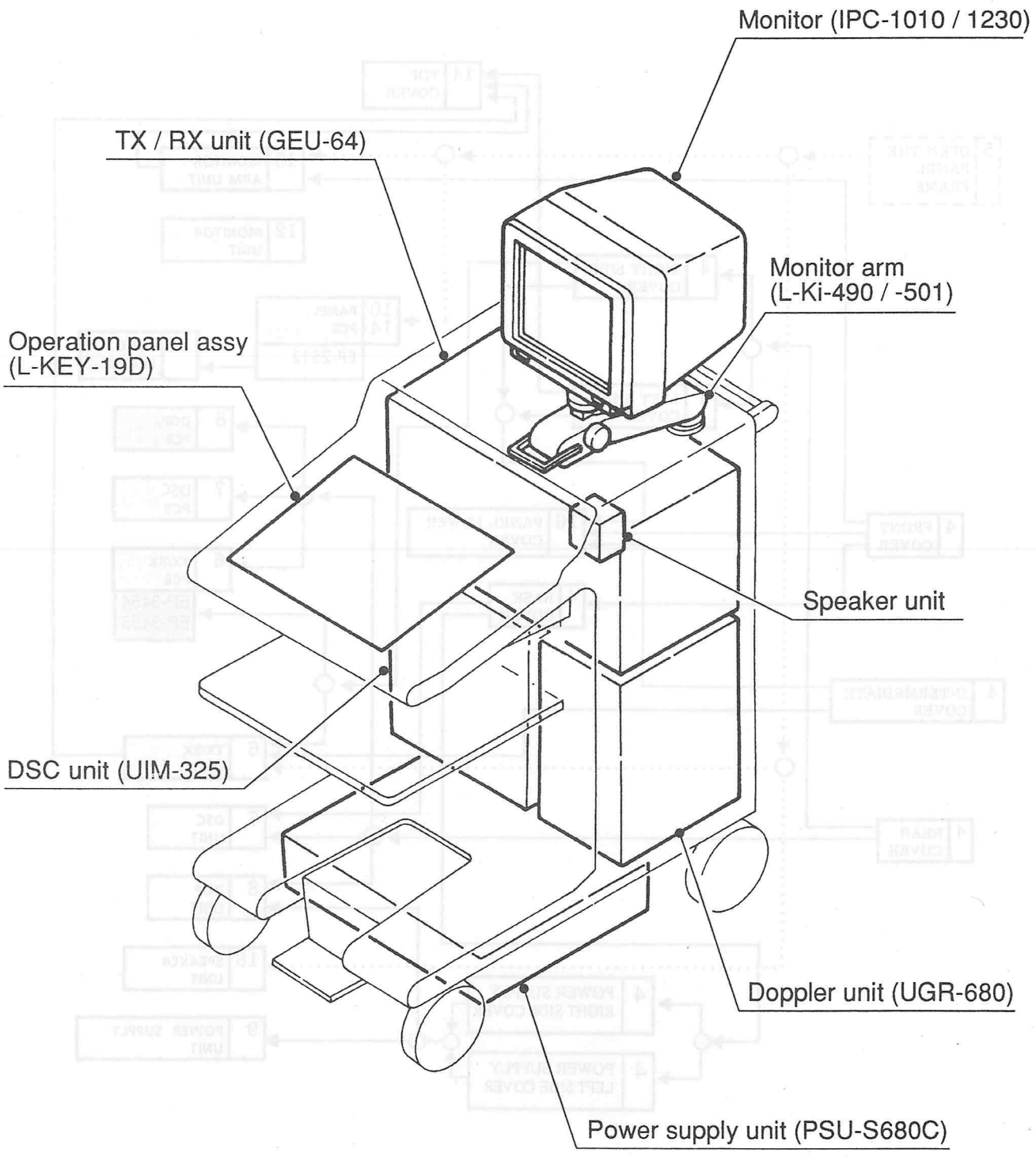


Fig. 2

## 3. Dismounting Flowchart

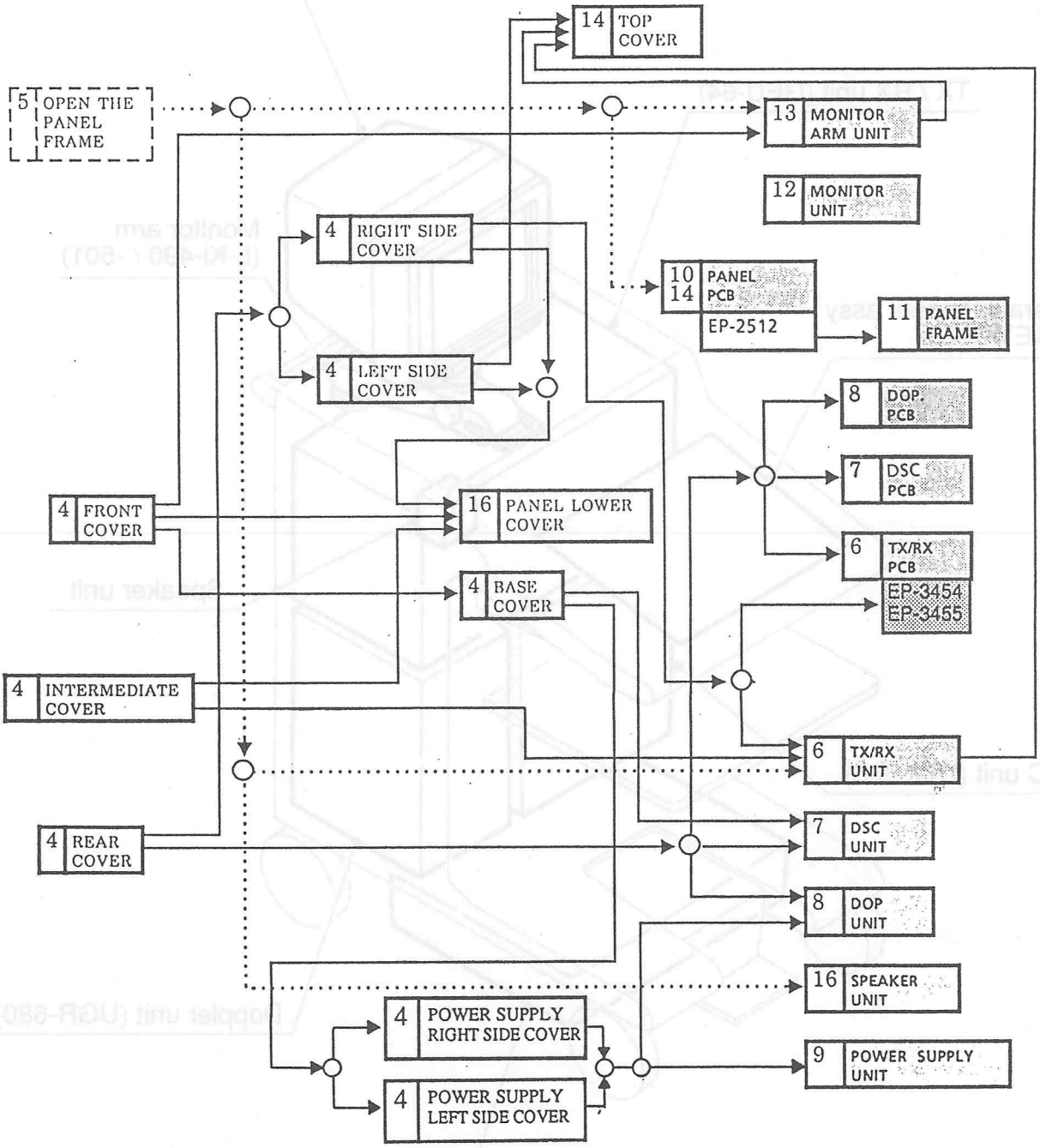

## 4. How to Remove Covers

Note: See Dismounting flowchart.

Operation (6) is not required for S/N 21M10986 and up.

(1) Remove 4 screws and remove front cover. (Applicable to the units S/N 21M08243～21M12683) ( Ⓐ in Fig.)

(1)' Remove 6 screws and remove front cover. (Applicable to the units S/N 31M00876～) ( Ⓐ in Fig.)

(2) Remove 2 screws to remove base cover by pulling it toward you. ( Ⓑ in Fig.)

(3) Remove 2 screws and remove intermediate cover.( Ⓒ in Fig.)

(4) Remove 3 screws and remove foot rest. ( Ⓓ in Fig.)

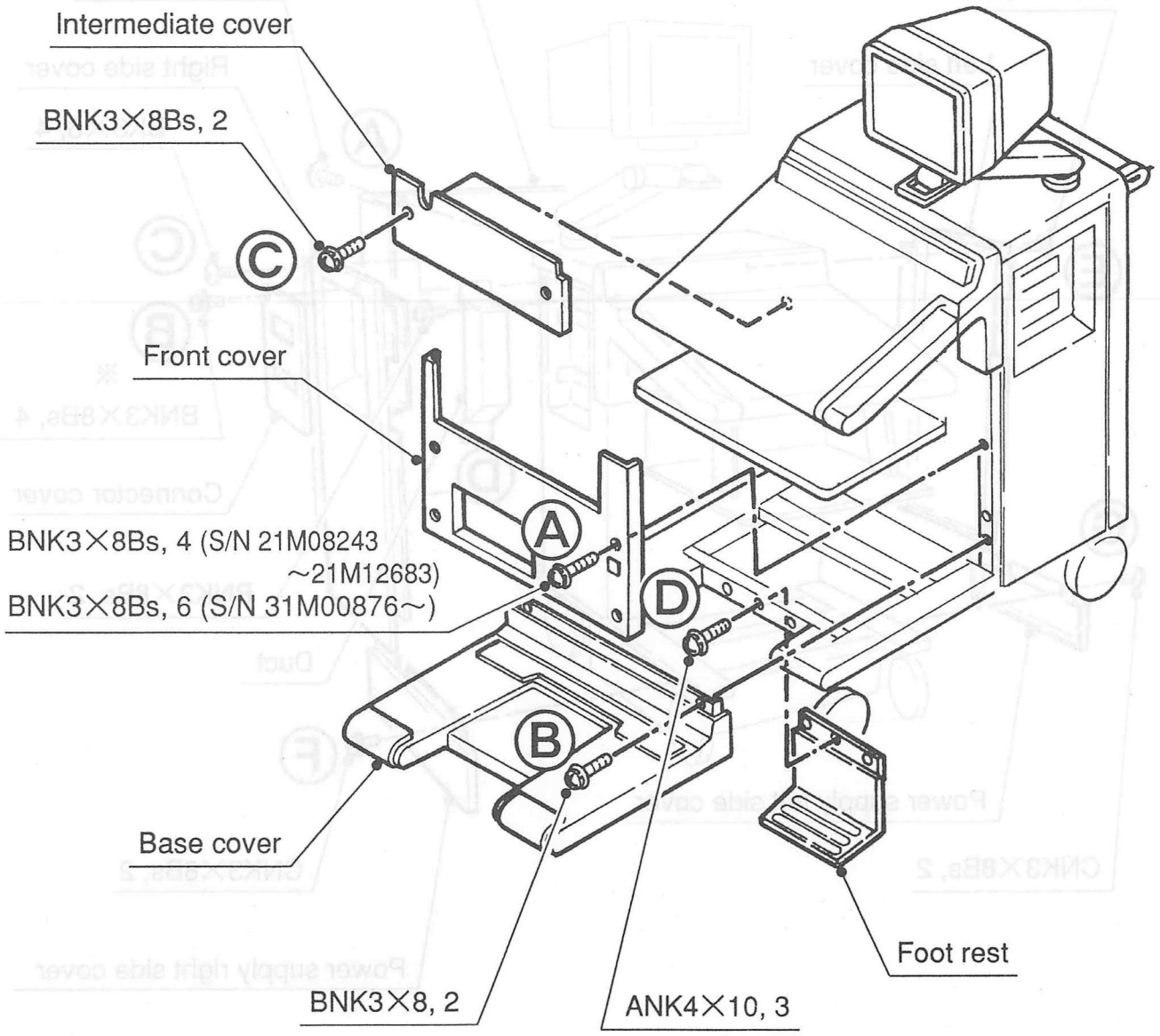


Fig. 3

(5) Remove 6 screws and remove rear cover. ( Ⓐ in Fig.)
(6) Remove 4 screws and remove connector cover. ( Ⓑ in Fig.)
(7) Remove 4 screws and shift the right side cover rearward and remove it. ( Ⓒ in Fig.)
(8) Remove 2 screws and remove duct. ( Ⓓ in Fig.)
(9) Remove 4 screws and remove left side cover similarly as in (7). ( Ⓔ in Fig.)
(10) Remove 2 screws and remove power supply right side cover. ( Ⓕ in Fig.)
(11) Remove 2 screws and remove power supply left side cover. ( Ⓖ in Fig.)

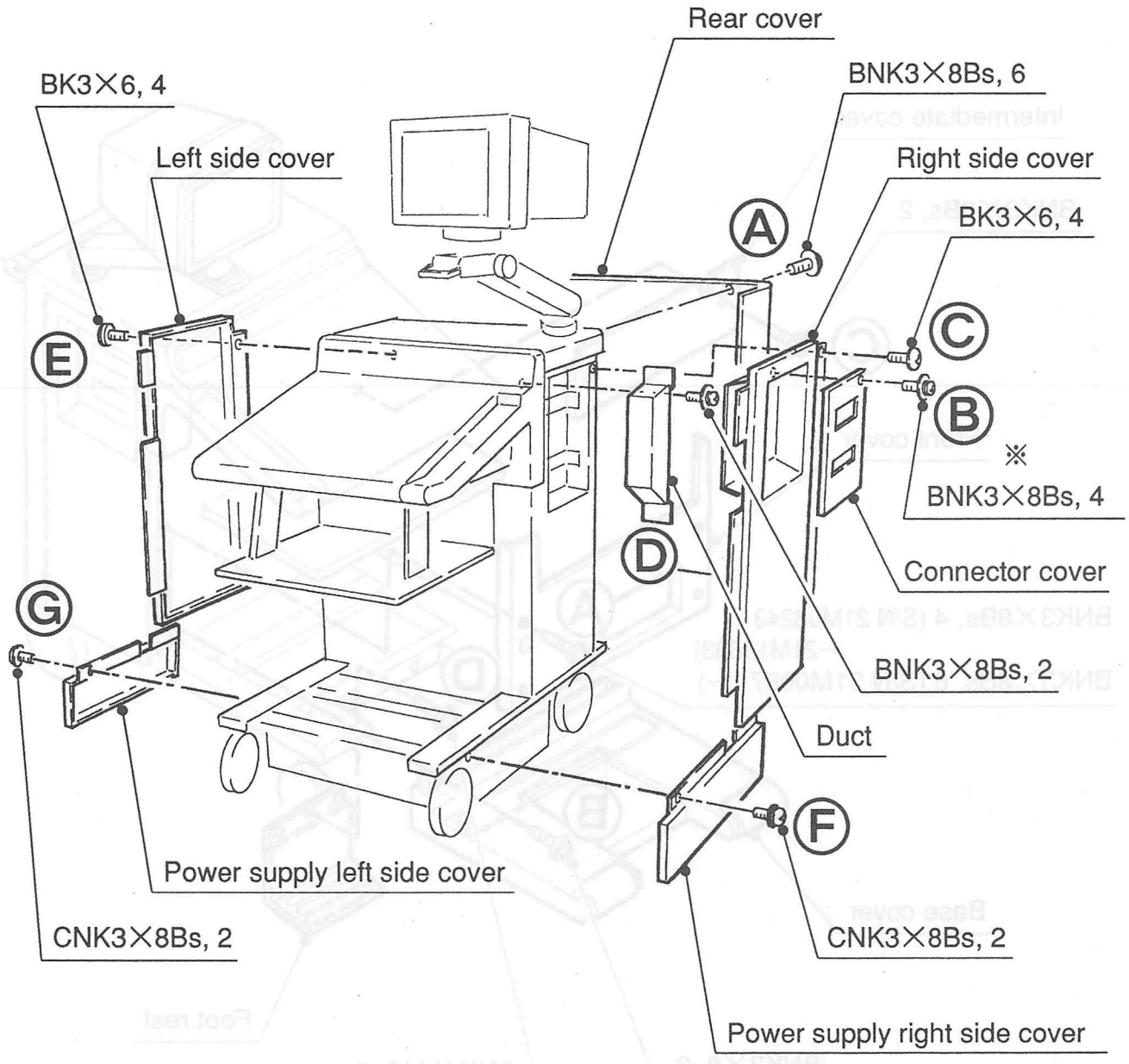


※ Do not remove the connector cover the units subsequent to S/N 21M10986.

Fig. 4

## 5. Panel frame opening procedure

(1) Loosen to remove three (3) screws and open the panel frame, and put the stay in the notch of the upper cover stationary plate and fix. (Ⓐin Fig. )

(2) Loosen to remove two (2) E-ring and two (2) shaft of the brind cover, and take the cover away. (Ⓑin Fig. )

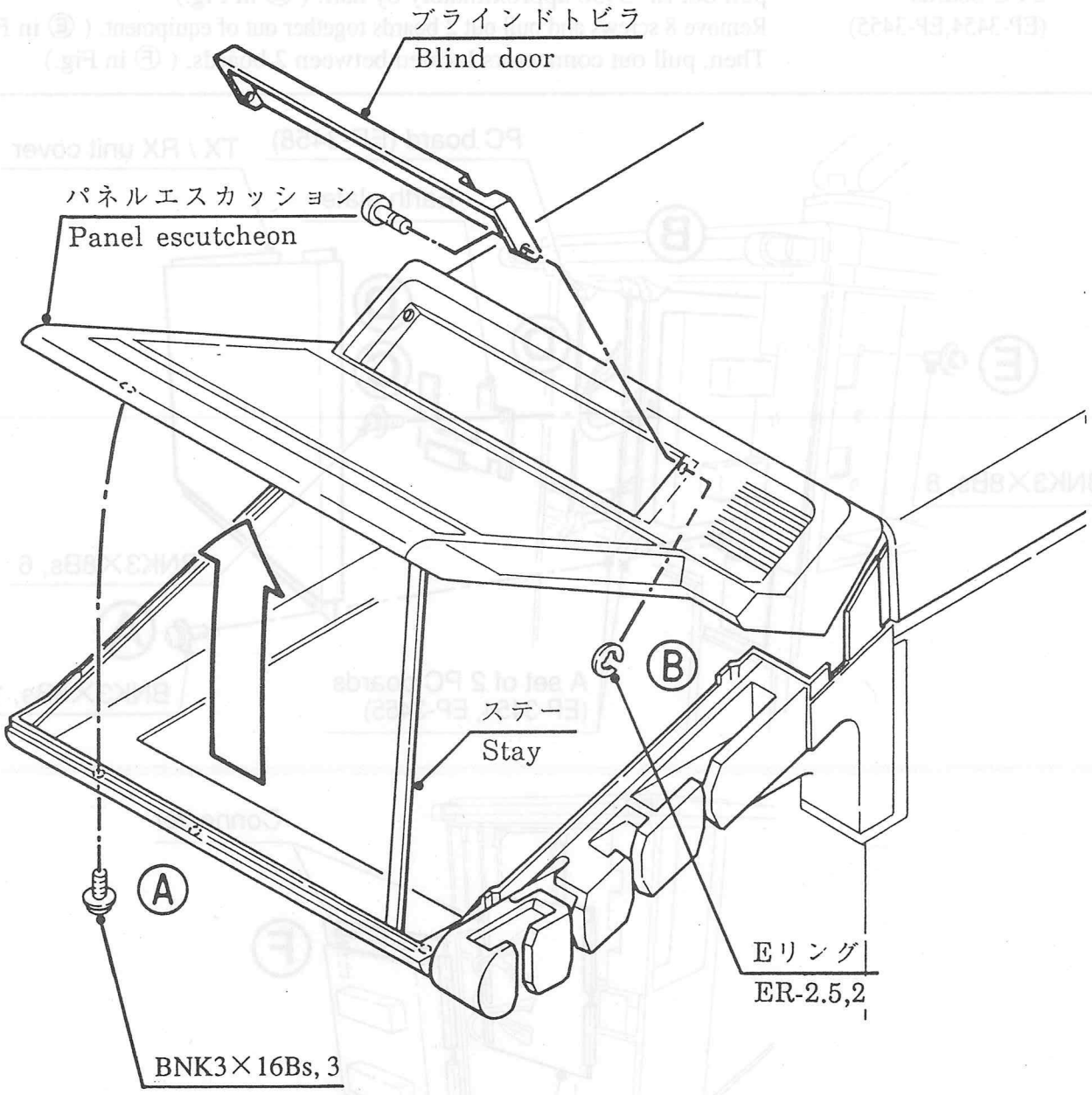


Fig.5

## 6. How to Pull out PC Board of TX / RX Unit (GEU-64) and How to Remove Unit

Note: See Dismounting flowchart.

● How to Pull out PC Board

(1) Remove 16 screws and remove TX / RX unit cover. ( Ⓐ in Fig.)
Then PC board can be taken out. ( Ⓑ in Fig.)

※ PC board specified below, however, shall be pulled out after completion of operations referred to below.

○ 3rd PC board thru 5th counted from the left ・・・ Remove 6 screws and remove earth plate. ( Ⓒ in Fig.)

○ A set of 2 PC boards (EP-3454,EP-3455) ・・・・・・ Remove 6 screws to remove earth plate.After that, pull out EP-3458 approximately by half. ( Ⓓ in Fig.)
Remove 8 screws and pull out 2 boards together out of equipment. ( Ⓔ in Fig.)
Then, pull out connectors located between 2 boards. ( Ⓕ in Fig.)

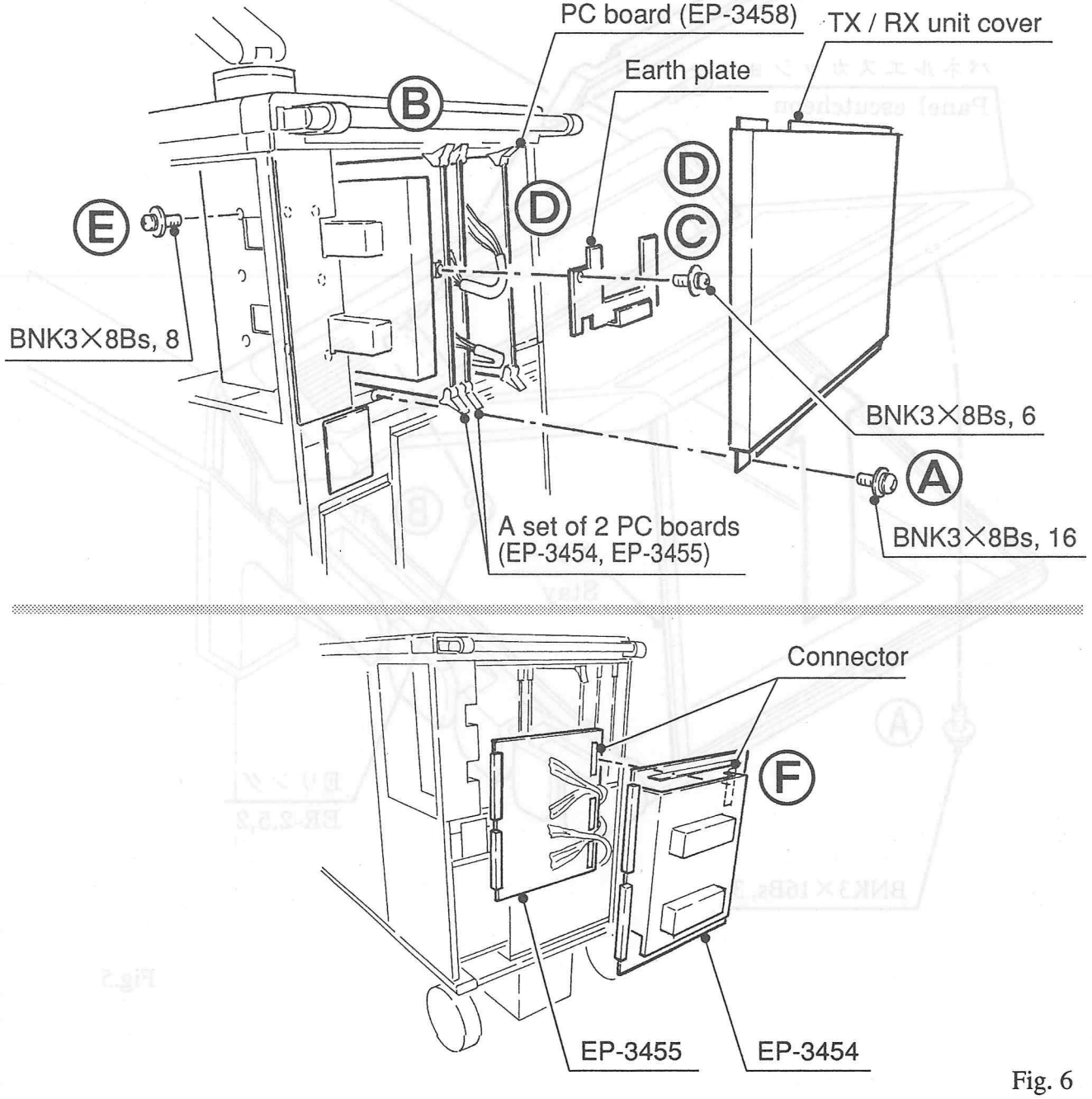


Fig. 6

● How to Remove Unit

(2) Remove 2 screws of earth plate on left side. ( Ⓐ in Fig.)

(3) Remove 4 screws and remove TX /RX unit. ( Ⓑ in Fig.)
(Remove all the cables connected)

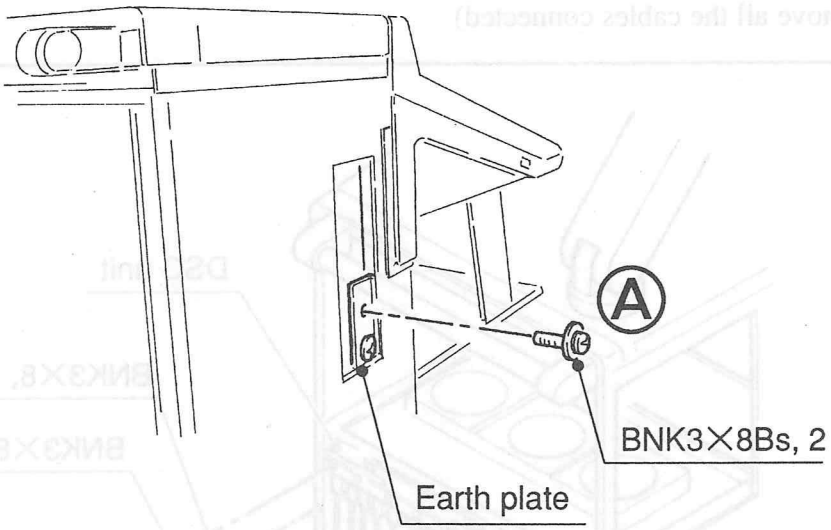


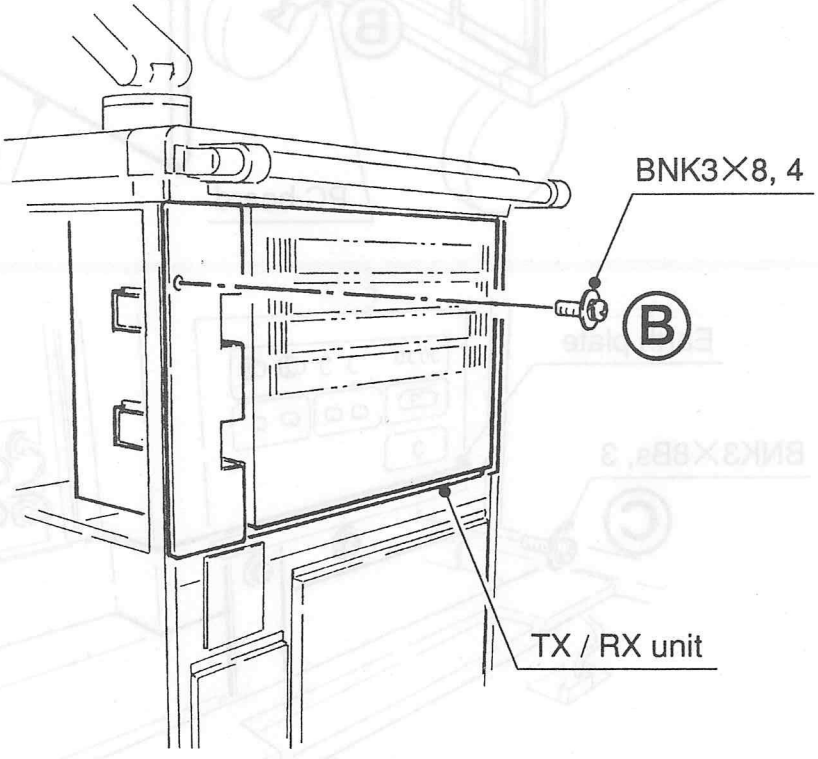


Fig. 7

## 7. How to Pull out PC Board of DSC Unit (UIM-325) and How to Remove Unit

Note: See Dismounting flowchart.

- How to Pull out PC Board

  (1) Remove 14 screws and remove DSC unit. ( Ⓐ in Fig.)
  Then PC board can be taken out. ( Ⓑ in Fig.)

- How to Remove Unit

  (2) Remove 3 screws of earth board on front side of equipment. ( Ⓒ in Fig.)

  (3) Remove 6 screws and remove DSC unit. ( Ⓓ in Fig.)
  (Remove all the cables connected)

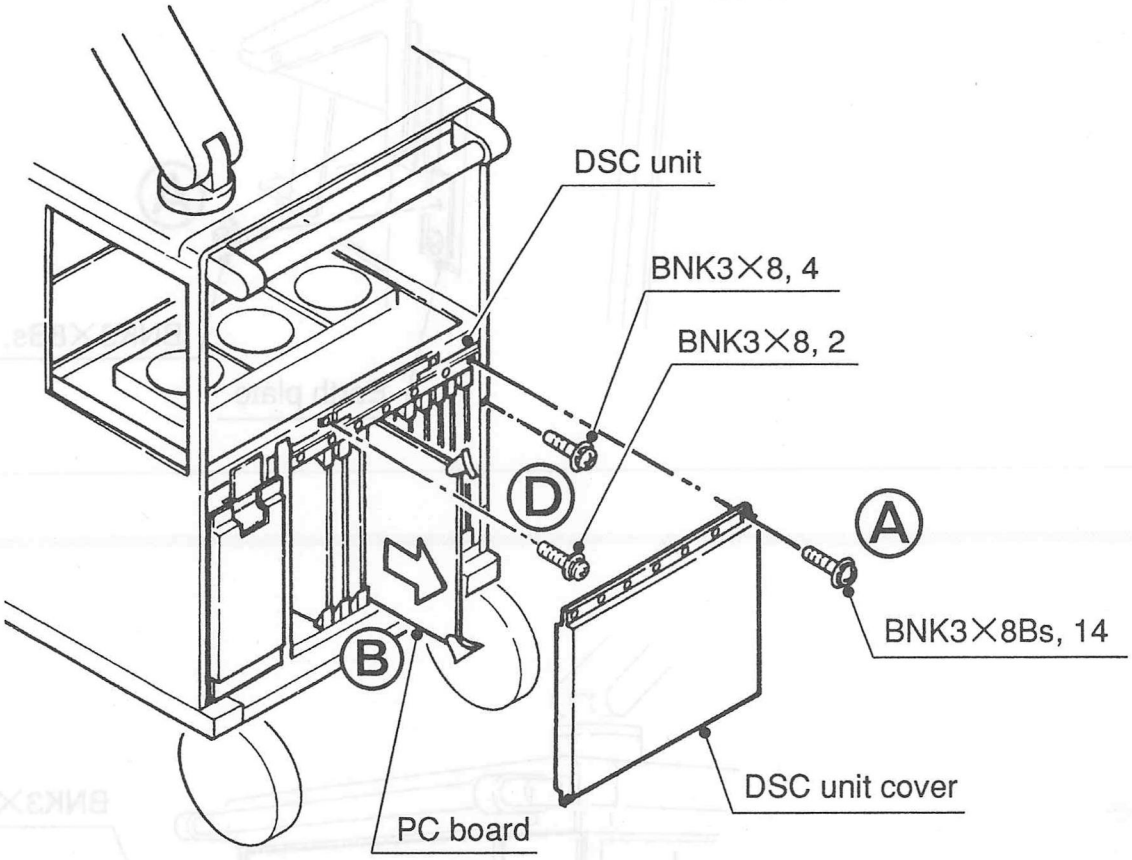


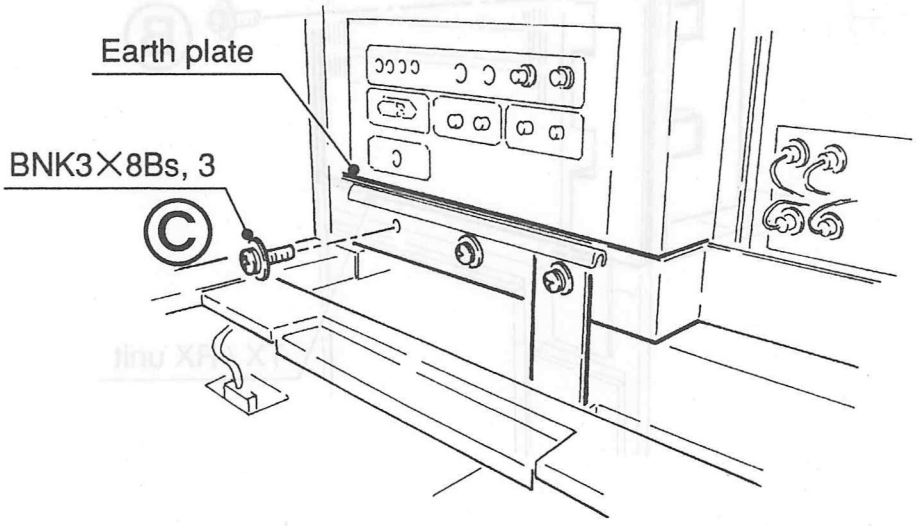


Fig. 8

## 8. How to Pull out PC Board of Doppler Unit (UGR-680) and How to Remove Unit

Note: See Dismounting flowchart.

- How to Pull out PC Board
  - (1) Remove 4 screws and remove Doppler unit. ( Ⓐ in Fig.)
    Then PC board can be taken out. ( Ⓑ in Fig.)
- How to Remove Unit
  - (2) Disconnect connector J512 from connector panel of power supply unit on right side. ( Ⓒ in Fig.)
  - (3) Remove 3 screws of earth board on front side of equipment. ( Ⓓ in Fig.)
  - (4) Remove 6 screws and remove Doppler unit with rear earth plate. ( Ⓔ in Fig.)
    (Remove all the cables connected)

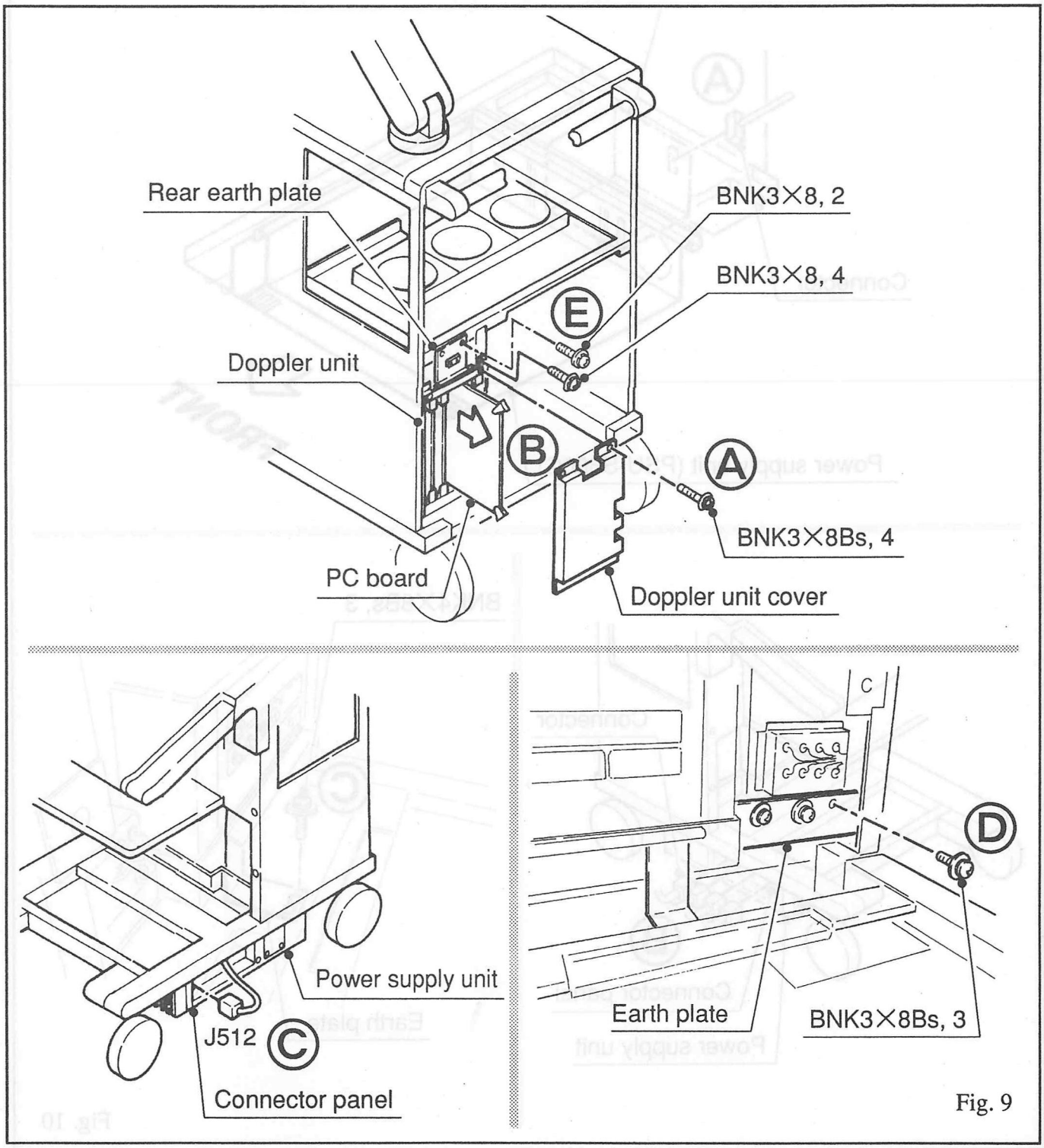


Fig. 9

## 9. How to Remove Power supply Unit (PSU-S680C)

Note : Make sure to turn off power supply of the device and lock the caster. And power supply unit weighs very heavily. Use utmost care to carry out operation, accordingly

(1) When the isolation transformer is provided, remove the connector. ( Ⓐ in Fig.)

(2) Remove all the cables connected to connector panel on the right side of the power supply unit (PSU-S680C). ( Ⓑ in Fig.)

(3) Remove 3 screws of earth board on front side of equipment. ( Ⓒ in Fig.)

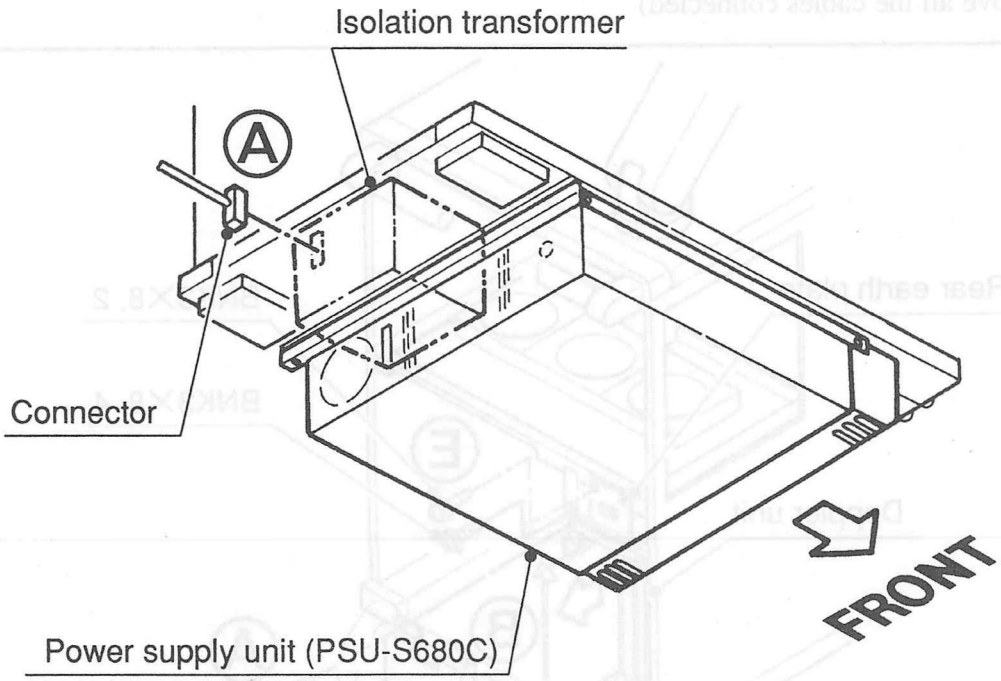


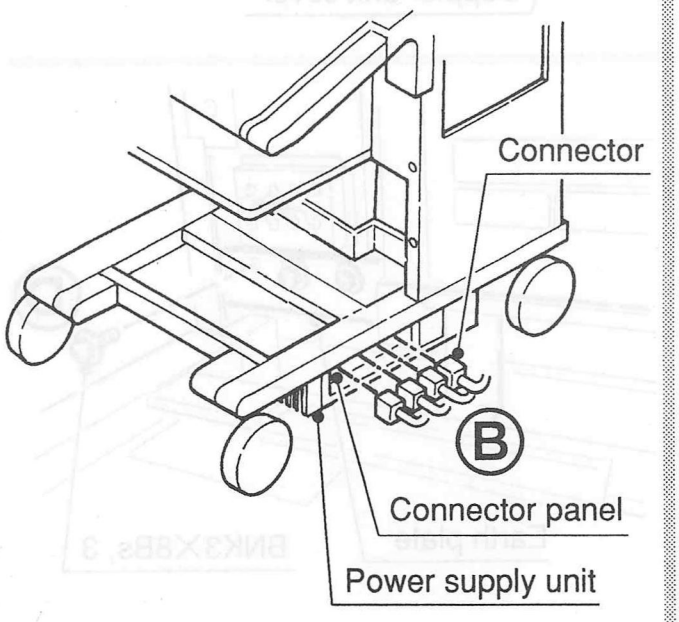


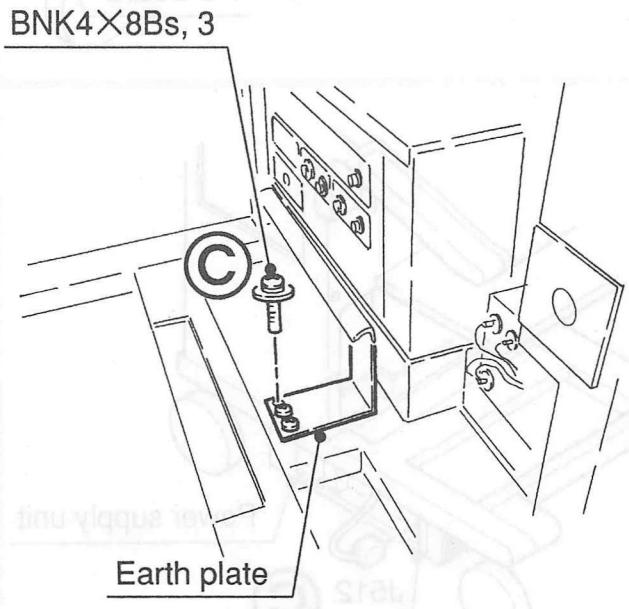


Fig. 10

(4) Place the spacers under the power supply unit. ( Ⓐ in Fig.)
(As for details of the spacer, following drawing)

(5) Loosen to remove 2 screws under the right side face and 2 screws of the left side face respectively. ( Ⓑ in Fig.)

(6) Take out the power supply unit from the left side. ( Ⓒ in Fig.)

(7) As the power supply unit is struck to the hexagonal socket headed bolt as in Fig. 11 and stopped, put the hand from the upper part of the box and lift the power supply unit, and remove the unit over the hexagonal socket headed bolt. ( Ⓓ in Fig.)

※ Precautions about spacer

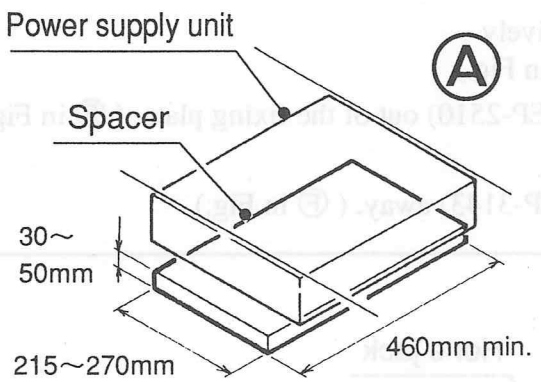


○ Do not use magazines or others, which may easily slip or collapse, as spacer.

○ Place the spacer at the center of the power supply unit.

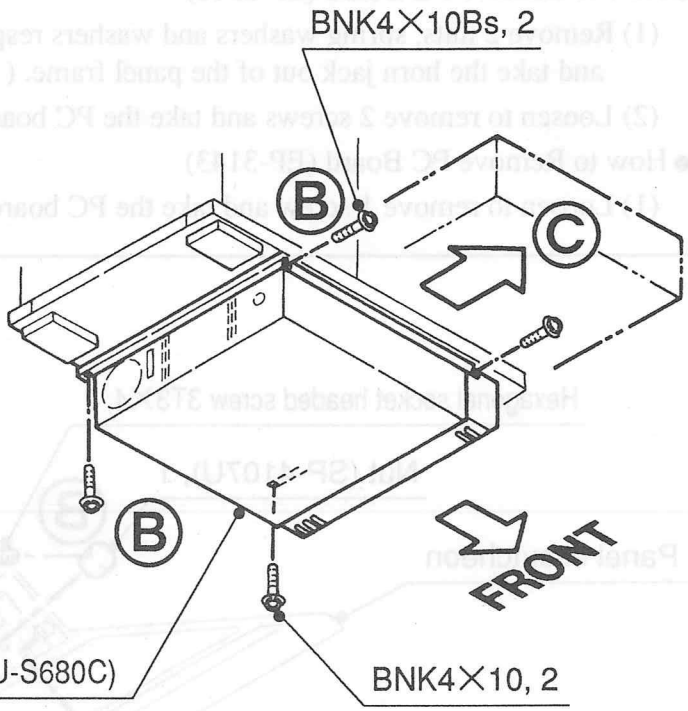


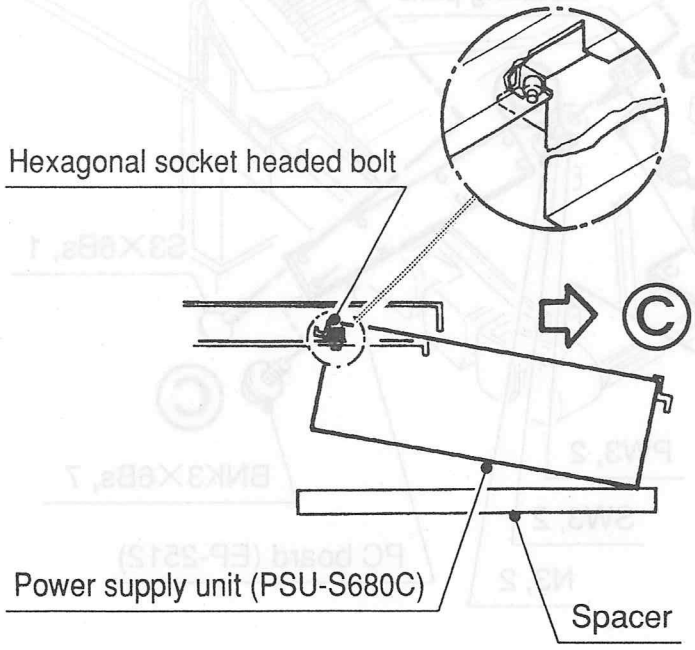


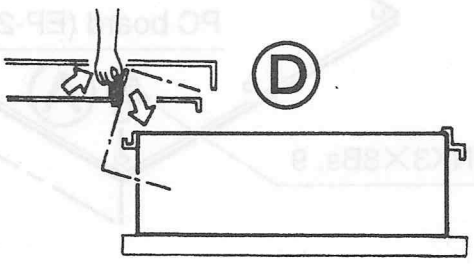


Fig. 11

## 10. How to Remove PC Board

Note: See Dismounting flowchart.

※ Remove all the cables connected to the PC board.

- How to Remove PC Board (EP-3265)
  (1) Loosen to remove 9 screws and take the PC board (EP-3265) away. ( Ⓐ in Fig.)
- How to Remove PC Board (EP-2512)
  (1) Loosen to remove respective hexagonal socket headed screws, and remove 8 nuts. ( Ⓑ in Fig.)
  (2) Loosen to remove 8 screws and take the PC board (EP-2512) away. ( Ⓒ in Fig.)
- How to Remove PC Board (EP-2510)
  (1) Remove 2 nuts, spring washers and washers respectively and take the horn jack out of the panel frame. ( Ⓓ in Fig.)
  (2) Loosen to remove 2 screws and take the PC board (EP-2510) out of the fixing plate. ( Ⓔ in Fig.)
- How to Remove PC Board (EP-3143)
  (1) Loosen to remove 1 screw and take the PC board (EP-3143) away. ( Ⓕ in Fig.)

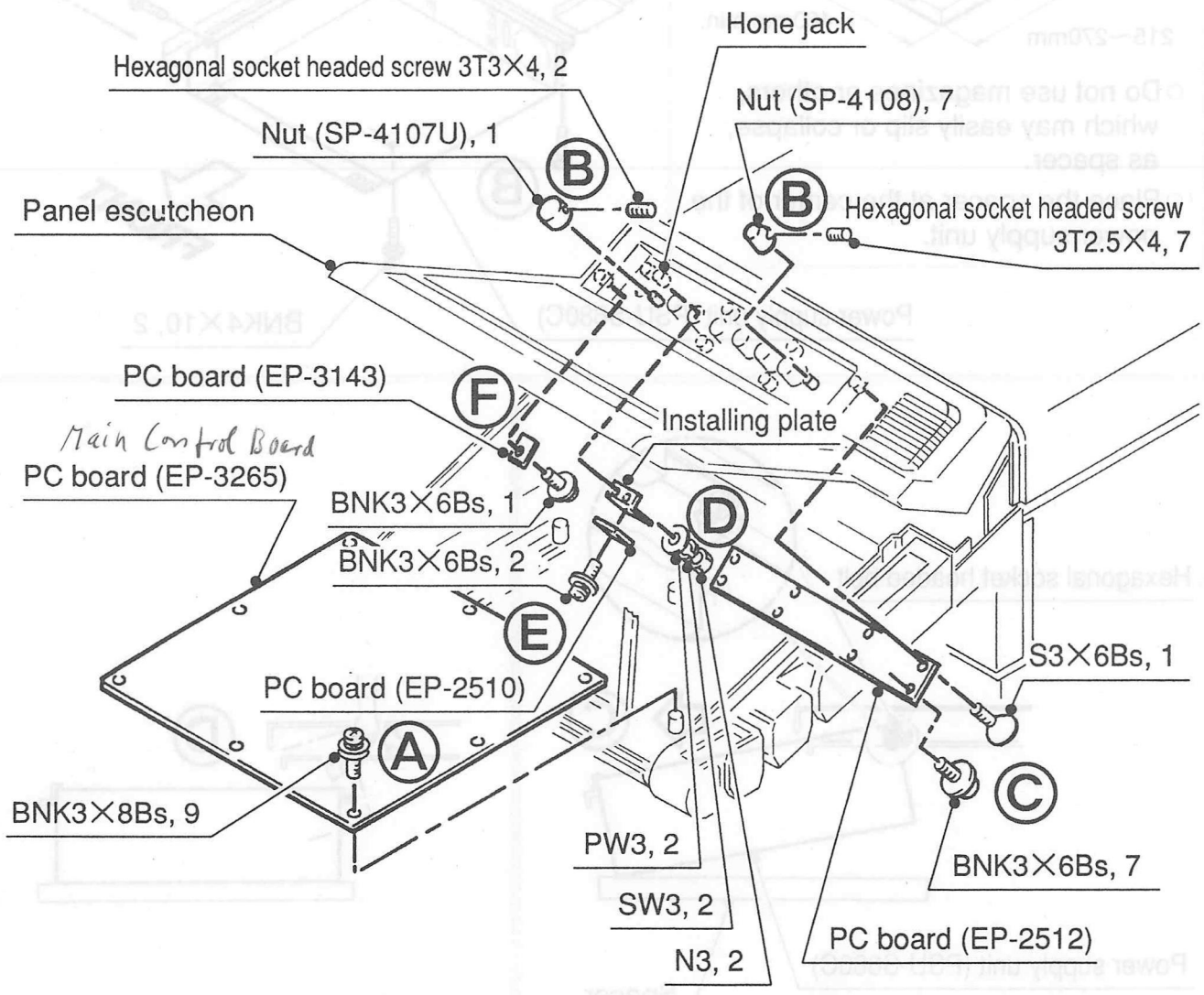


Fig. 12

## 11. How to Remove Panel frame and PC Board of Operation Panel

Note : See Dismounting flowchart.

- How to Remove Panel frame

(1) Loosen to remove five (5) screws of the panel frame and take it away.(Ⓐin Fig. )

- How to Remove PC Board (EP-2960 , EP-3182)

※ EP-2960 and EP-3182 are connected by the flexible cable , then take them out together.

(1) Remove fifteen (15) nuts , and loosen to remove seventeen (17) screws of the PC boards (EP-2960 , EP-3182) and take them away. (Ⓑin Fig. )
(Remove all the cables connected)

- How to Remove Track Ball

(1) Remove four (4) nuts , spring washers and washers respectively , and take the track ball out of the operation panel. (Ⓒin Fig. )
(Remove all the cables connected)

(2) Loosen to remove four (4) screws and take the track ball out of the installing plate. (Ⓓin Fig. )

- How to Remove Operation Panel (L-KEY-19D)

(1) Remove nine (9) nuts, spring washers and washers respectively, and take the operation panel (L-KEY-19D) away. (Ⓔ in Fig.)

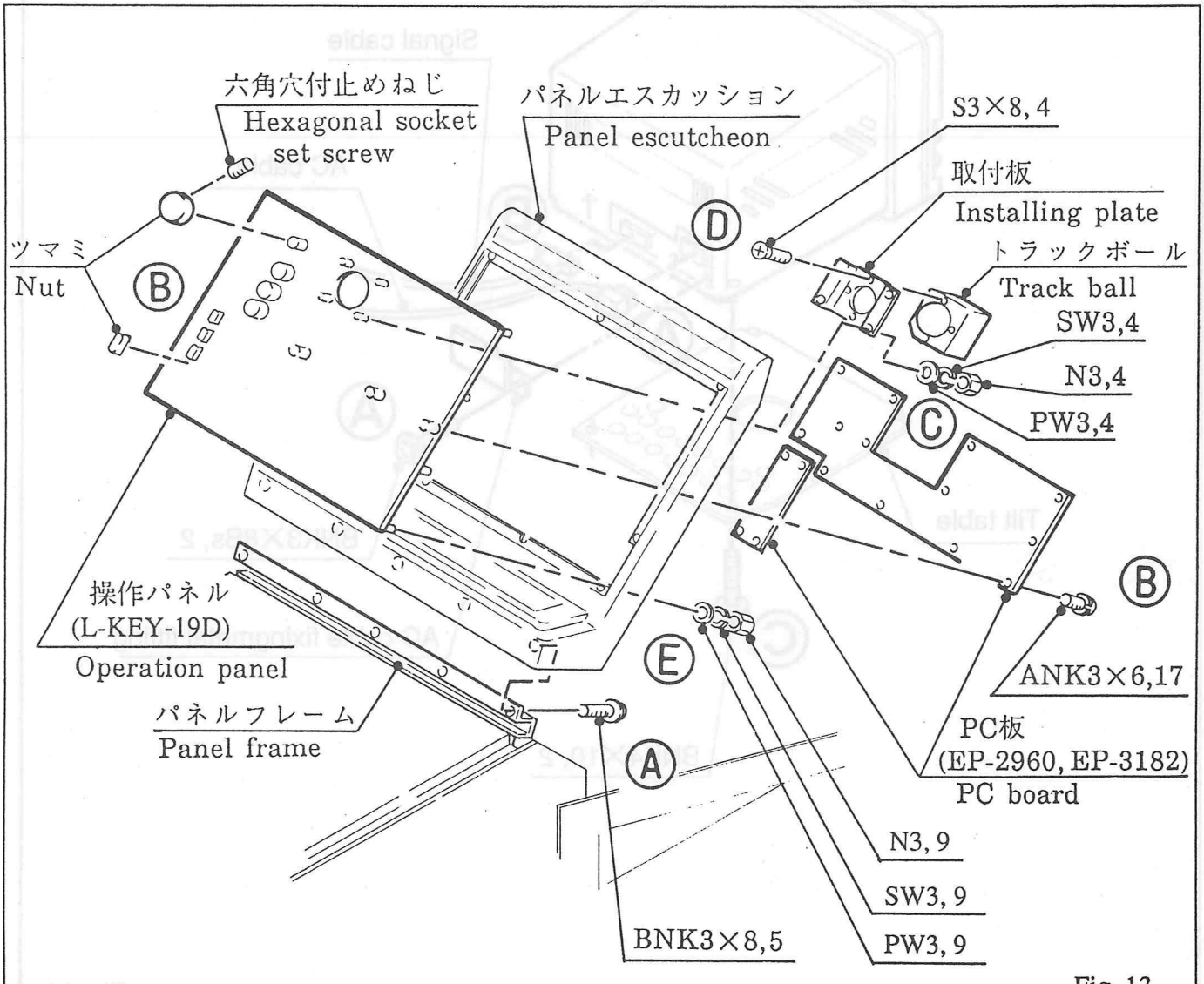


Fig. 13

## 12. How to Remove Observation Monitor Unit (IPC-1010 /-1230)

NOTE : Do not remove monitor before tightening monitor arm knob.

- IPC-1010

(1) Remove 2 screws and remove AC cable fixingmetal fitting.
Then disconnect AC cable. ( Ⓐ in Fig.)

(2) Disconnect signal cable. ( Ⓑ in Fig.)

(3) Remove 2 screws and remove monitor unit from the tilt table. ( Ⓒ in Fig.)

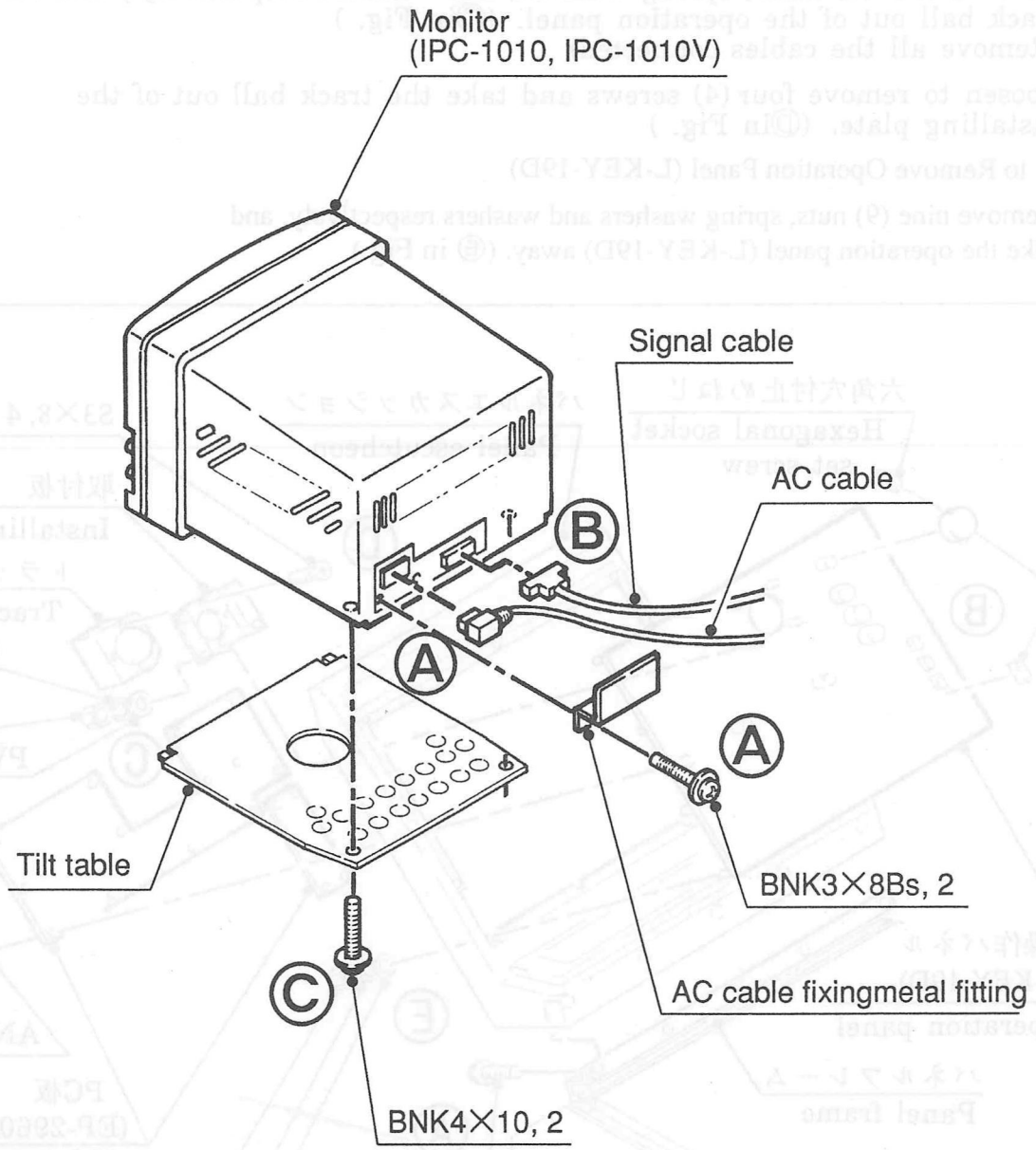


Fig. 14

● IPC-1230

(1) Remove 2 screws and remove AC cable fixingmetal fitting.
Then disconnect AC cable. ( Ⓐ in Fig.)

(2) Disconnect signal cable. ( Ⓑ in Fig.)

(3) Remove 4 screws and remove monitor unit from the tilt table. ( Ⓒ in Fig.)

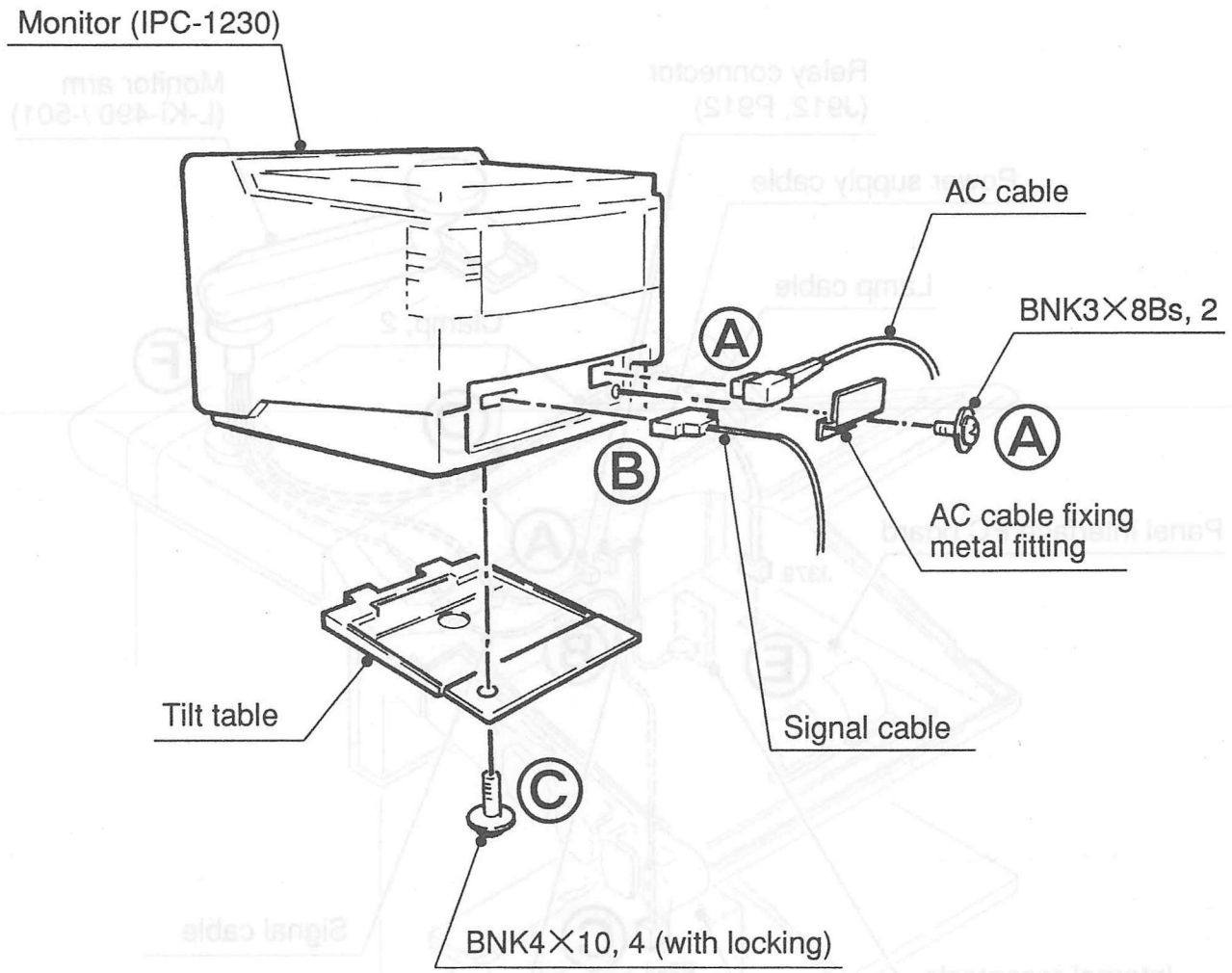


Fig. 15

## 13. How to Remove Monitor Arm (L-Ki-490 /-501)

(1) Disconnect the relay connectors (J912, P912) of the power supply cable connected to the internal receptacle. ( Ⓐ in Fig.)
(2) Remove the signal cable from clamp. ( Ⓑ in Fig.)
(3) Disconnect the connector (P244) of the signak cable from the DSC unit connector panel. ( Ⓒ in Fig.)
(4) Remove the lamp cable from 2 clamps on the panel escutcheon. ( Ⓓ in Fig.)
(5) Disconnect the connector (J379) of the lamp cable from panel interface PC board. ( Ⓔ in Fig.)
(6) Pull up the monitor arm and remove it from the body. ( Ⓕ in Fig.)

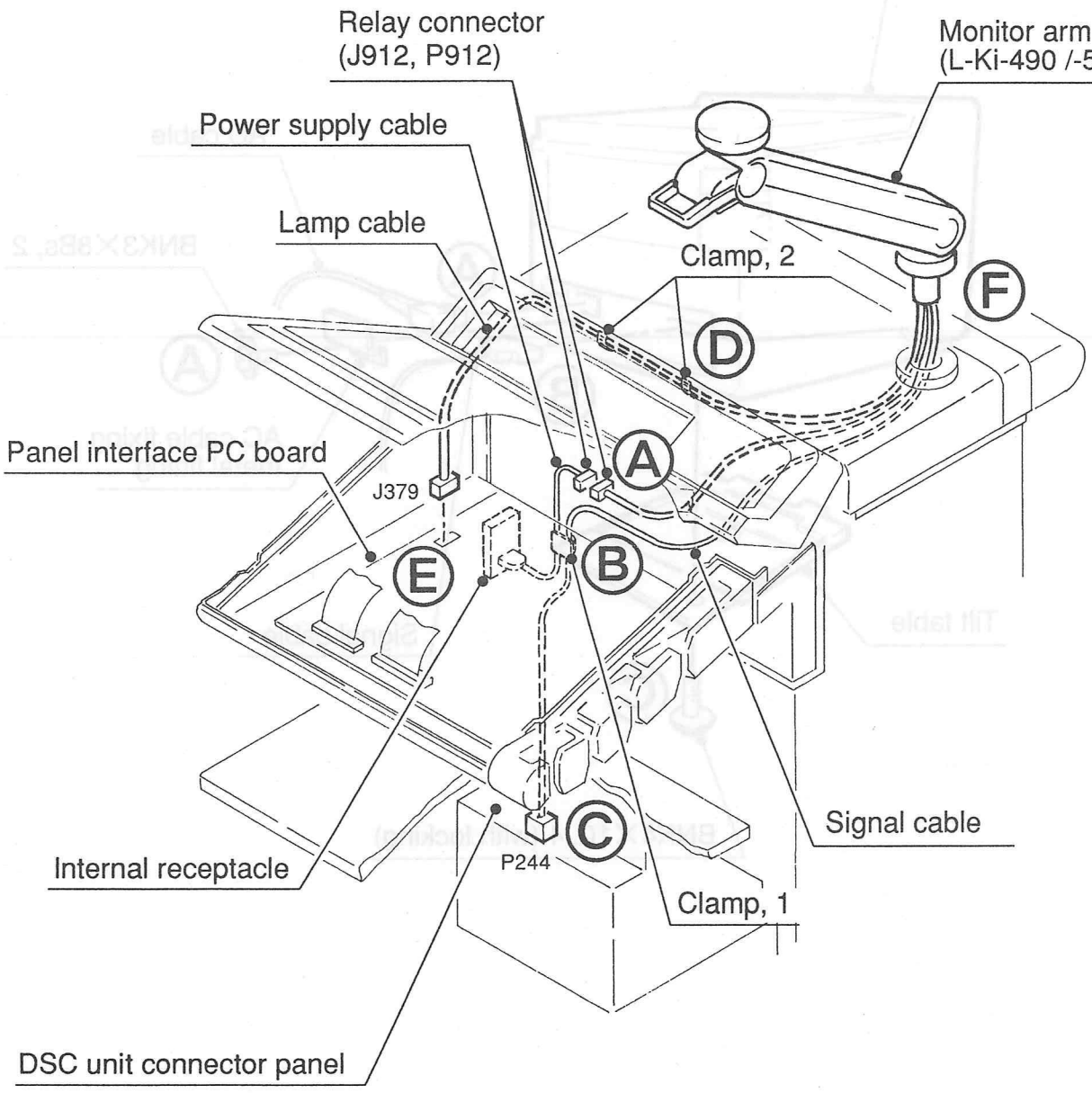


Fig. 16

## 14. How to Remove Top Cover

(1) Remove 2 hexagonal socket headed bolts and remove the bush. ( Ⓐ in Fig. )
(2) Remove 4 upper hexagonal socket headed bolts and 2 lower screws, and remove the monitor pedestal. ( Ⓑ in Fig.)
(3) Remove 4 screws and shift the rear cover rearward and remove it. ( Ⓒ in Fig.)

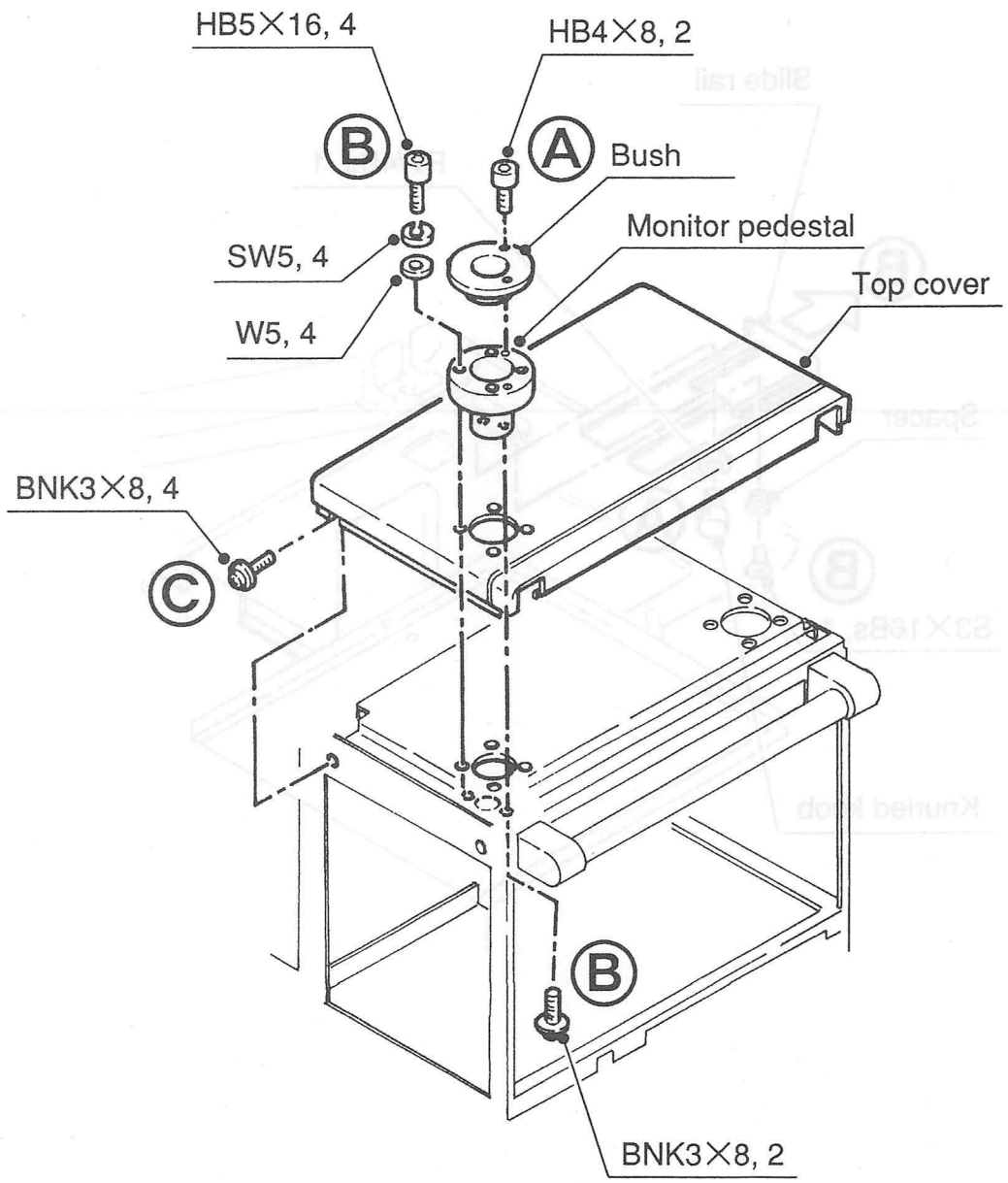


Fig. 17

## 15. How to Remove VTR Remote Controller Rack

(1) Remove the knurled knob and 1 washer. (Ⓐ in Fig.)

(2) Remove 1 screw and remove spacer and pull the slide rail and remove it. ( Ⓑ in Fig.)

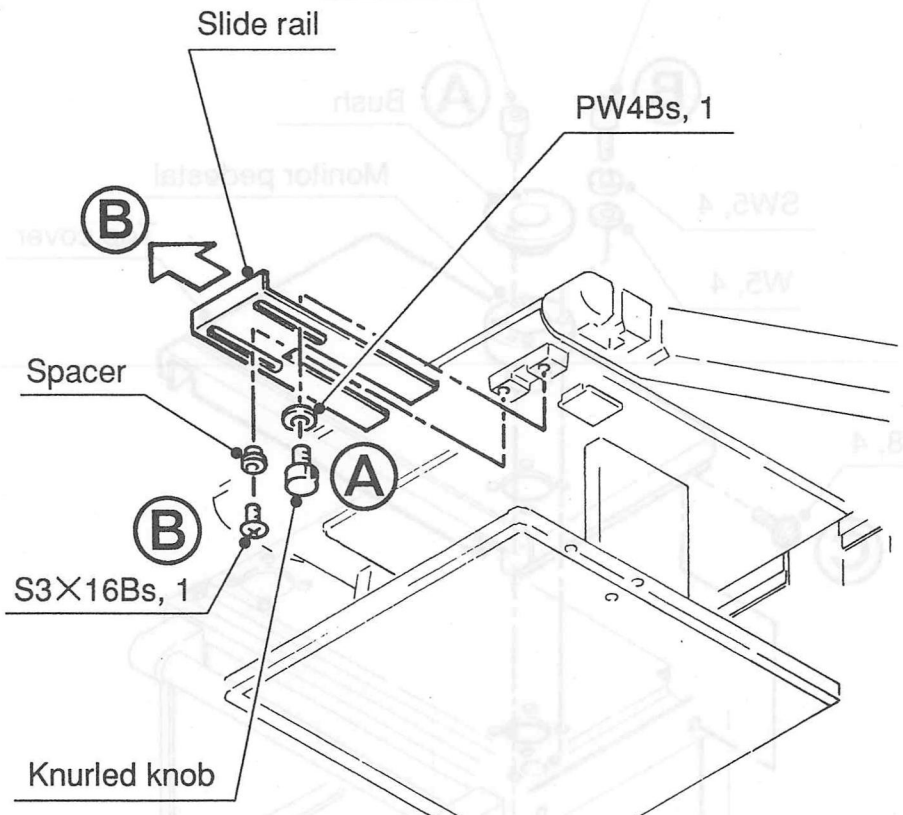


Fig. 18

## 16. How to Remove Panel Lower Cover and Speaker Unit

(1) Remove 3 screws and remove mounting block. ( Ⓐ in Fig.)
(2) Remove 2 screws and remove remote control rail. ( Ⓑ in Fig.)
(3) Remove 2 screws and remove hinge. ( Ⓒ in Fig.)
(4) Remove 2 screws respectively and remove 2 arms. ( Ⓓ in Fig.)

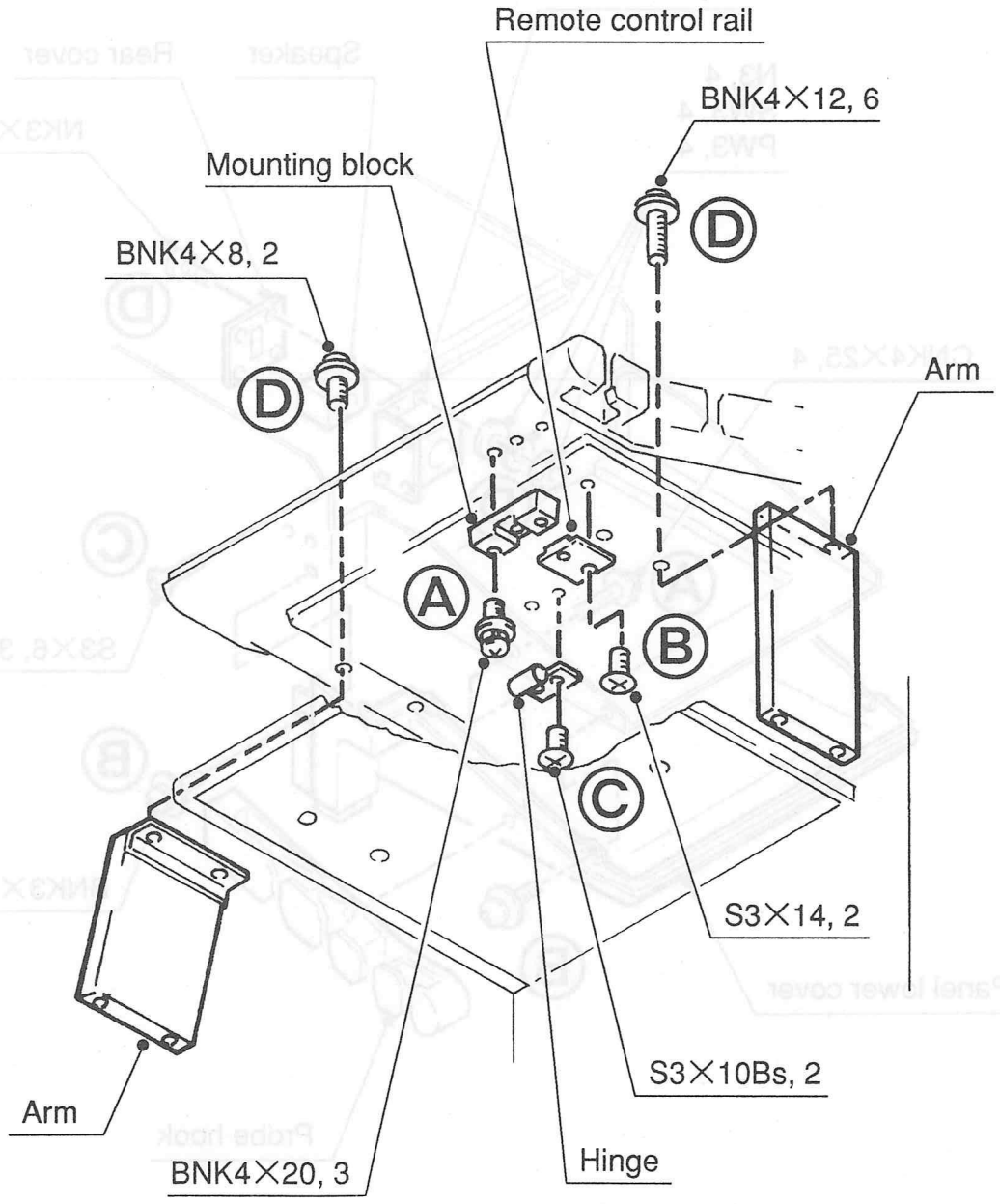


Fig. 19

(5) Remove 4 screws and remove the probe hook. ( Ⓐ in Fig.)

(6) Remove 8 screws and remove the panel lower cover. ( Ⓑ in Fig.)

● How to Remove Speaker Unit

(1) Remove 3 screws and remove speaker box from equipment. ( Ⓒ in Fig.)

(2) Remove 4 screws , nuts, washers, spring washer and remove rear cover of the speaker box. Then Remove speaker from speaker box. ( Ⓓ in Fig.)

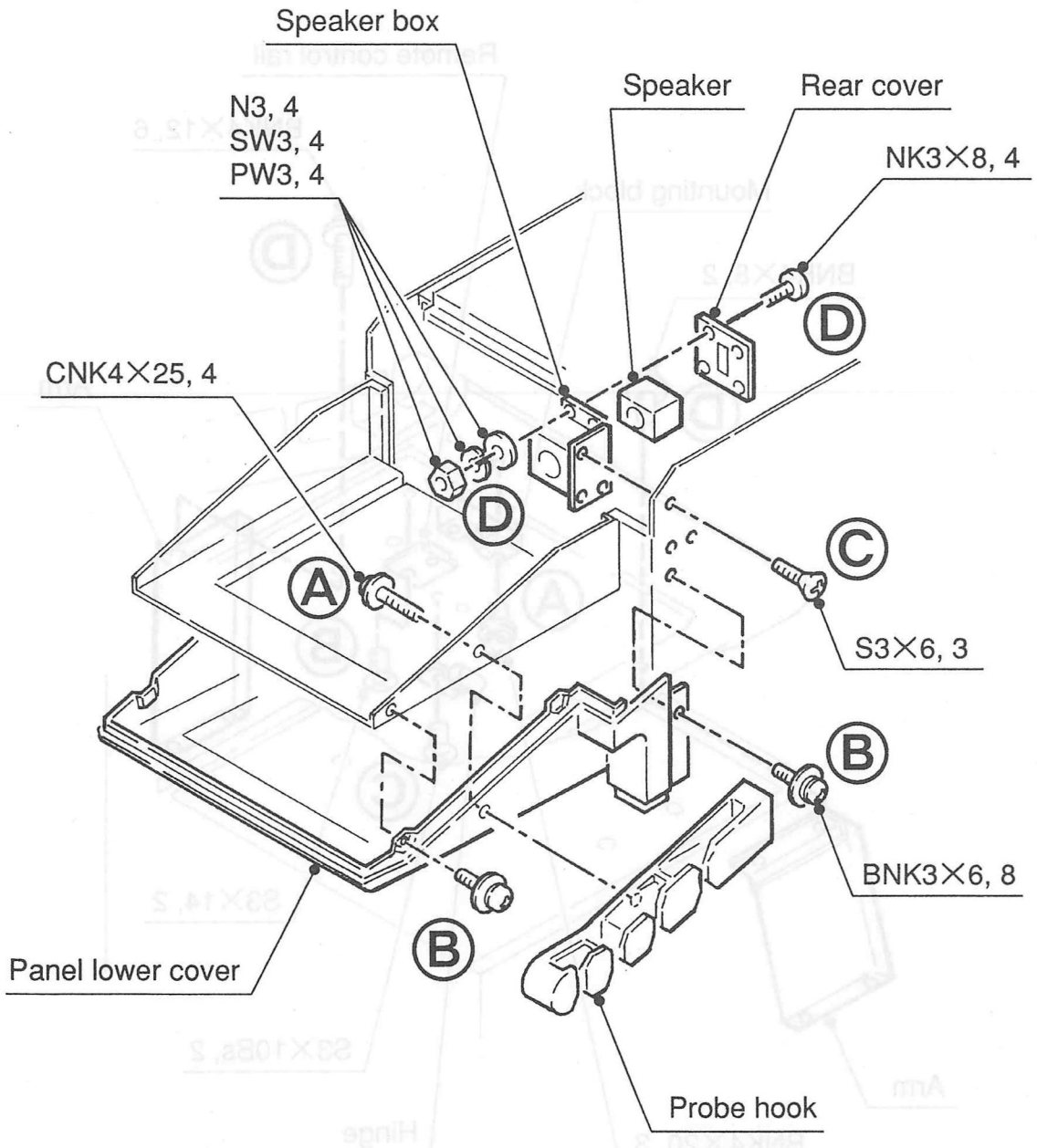


Fig. 20

# SSD-680STD Disassembling Instructions

1. Parts Identification
2. Individual Units Layout
3. Dismounting Flowchart
4. How to Remove Covers
5. How to Open Panel Escutcheon
6. How to Pull out PC Board of TX / RX Unit (GEU-65) and How to Remove Unit
7. How to Pull out PC Board of DSC Unit (UIM-326) and How to Remove Unit
8. How to Remove Power supply Unit (PSU-S680C)
9. How to Remove PC Board
10. How to Remove Panel Frame and PC Board of Operation Panel
11. How to Remove Observation Monitor Unit (IP-1230C)
12. How to Remove Monitor Arm (L-Ki-263B)
13. How to Remove Top Cover
14. How to Remove VTR Remote Controller Rack
15. How to Remove Panel Lower Cover

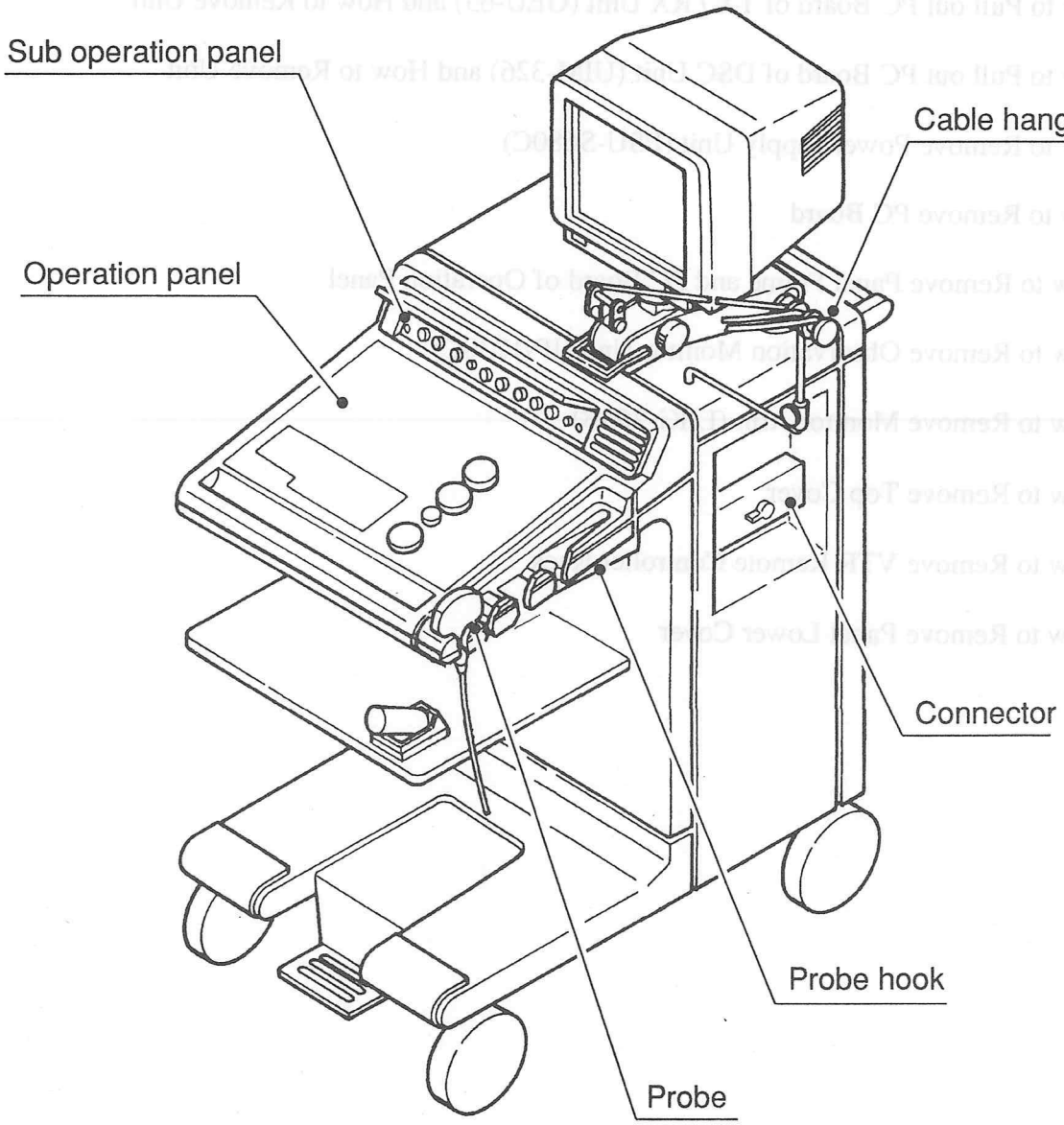
Sub operation panel
Cable hanger
Operation panel
Connector
Probe hook
Probe

Fig. 1

## 2. Individual Units Layout

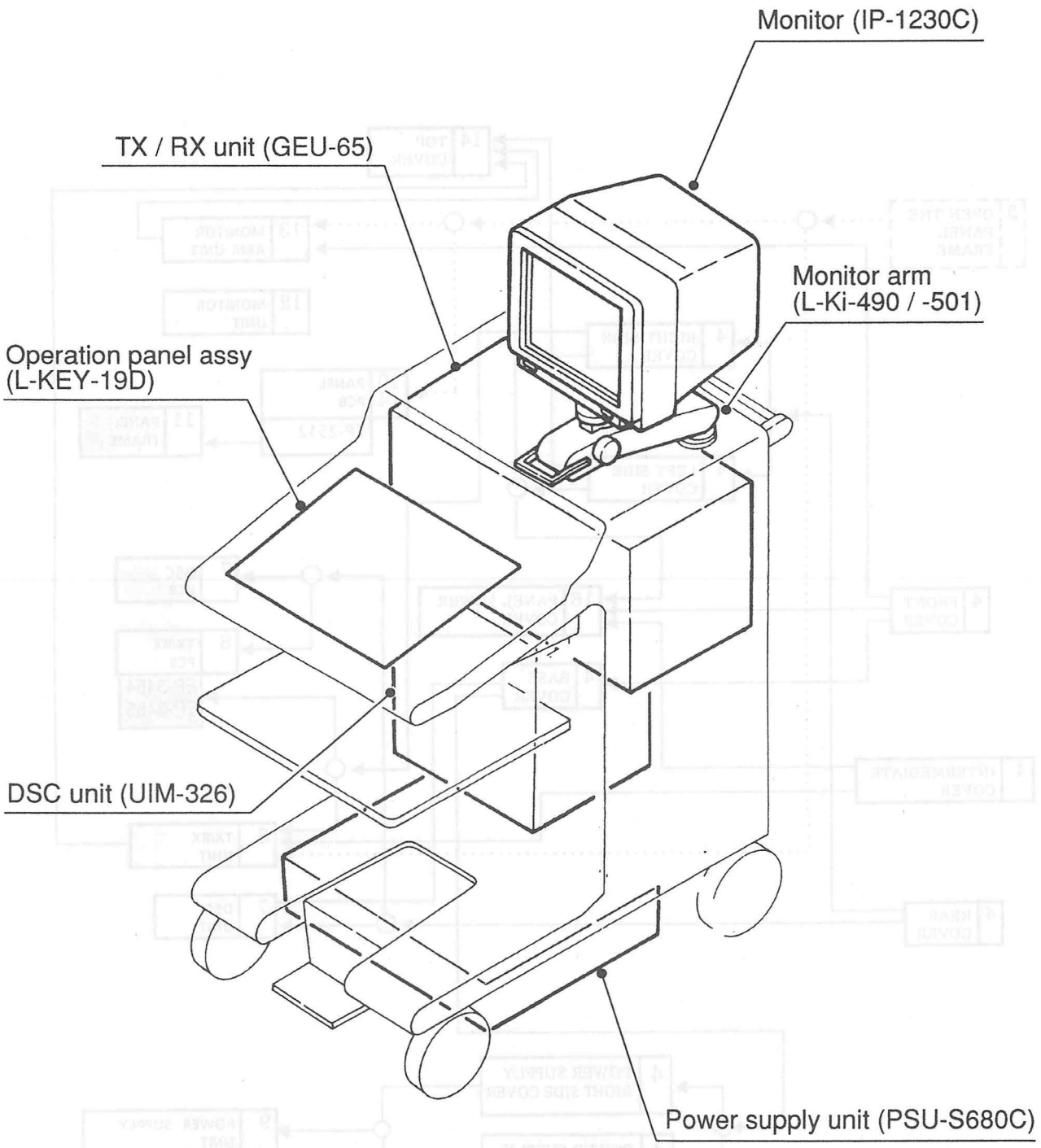


Fig. 2

## 3. Dismounting Flowchart

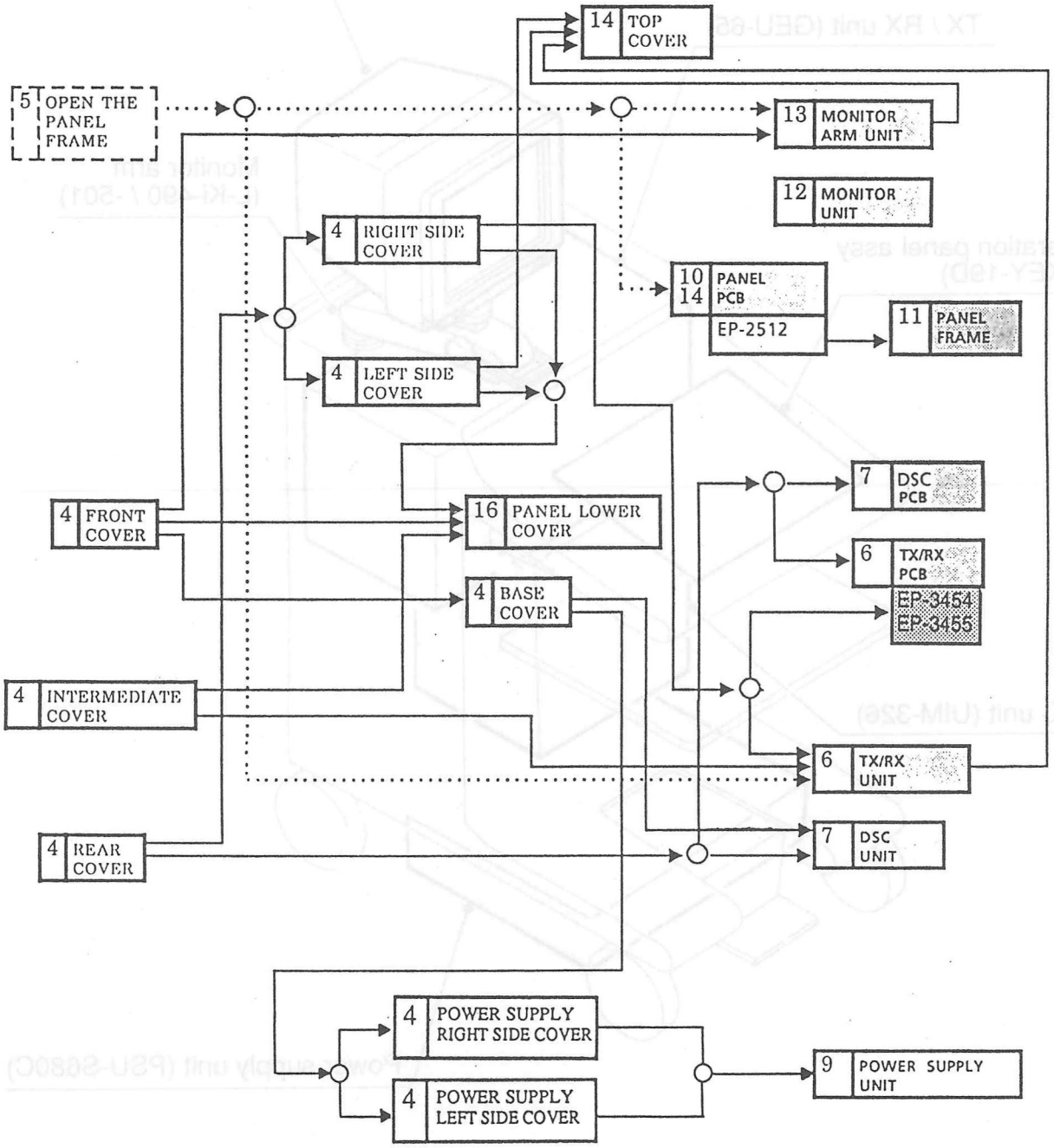

## 4. How to Remove Covers

Note: See Dismounting flowchart.

Operation (6) is not required for S/N 21M08252 and up.

(1) Remove 4 screws and remove front cover. (Applicable to the units S/N 21M08243～21M08262) ( Ⓐ in Fig.)

(1)' Remove 6 screws and remove front cover. (Applicable to the units S/N 31M01326～) ( Ⓐ in Fig.)

(2) Remove 2 screws to remove base cover by pulling it toward you. ( Ⓑ in Fig.)

(3) Remove 2 screws and remove intermediate cover.( Ⓒ in Fig.)

(4) Remove 3 screws and remove foot rest. ( Ⓓ in Fig.)

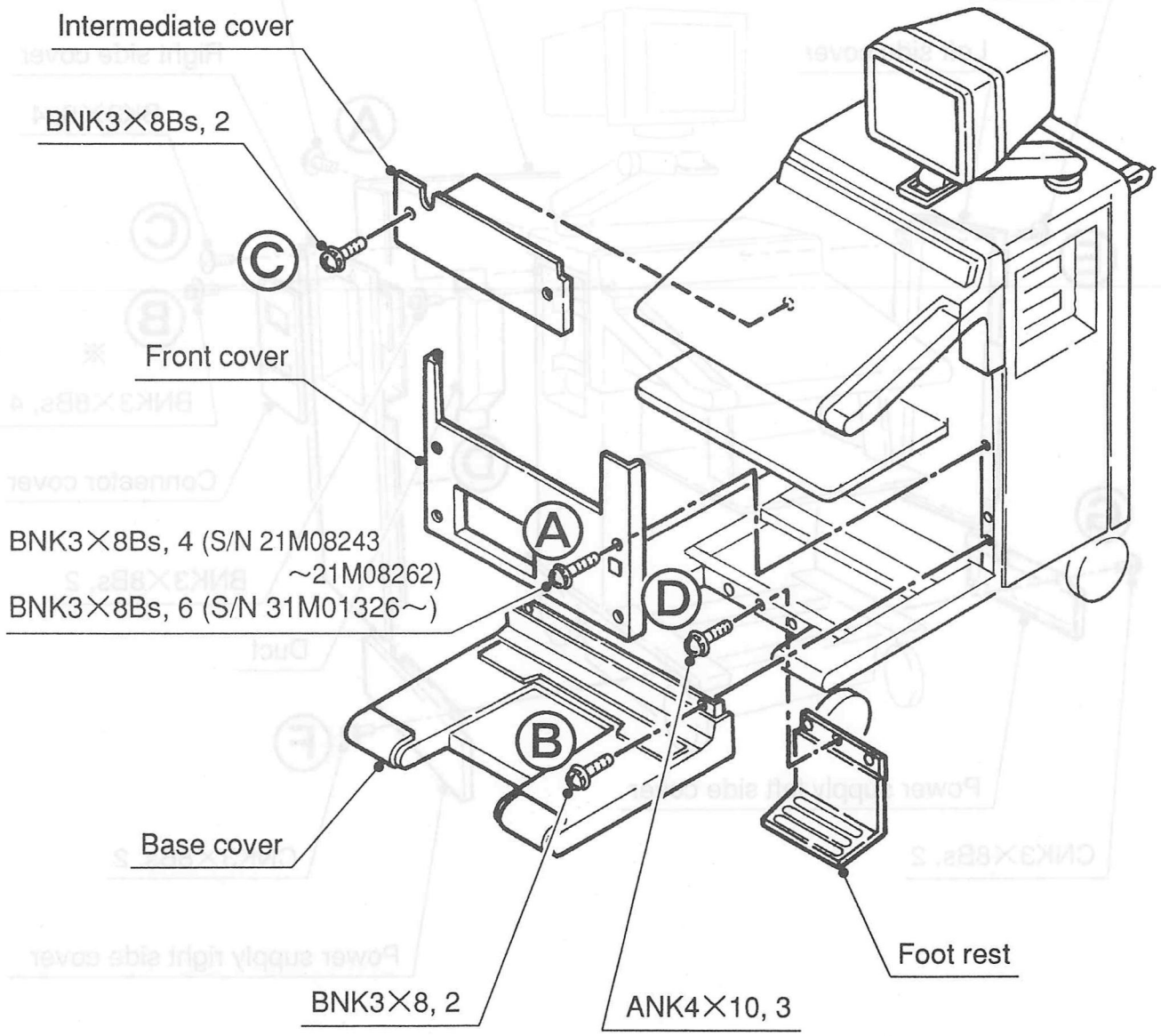


Fig. 3

(5) Remove 6 screws and remove rear cover. ( Ⓐ in Fig.)
(6) Remove 4 screws and remove connector cover. ( Ⓑ in Fig.)
(7) Remove 4 screws and shift the right side cover rearward and remove it. ( Ⓒ in Fig.)
(8) Remove 2 screws and remove duct. ( Ⓓ in Fig.)
(9) Remove 4 screws and remove left side cover similarly as in (7). ( Ⓔ in Fig.)
(10) Remove 2 screws and remove power supply right side cover. ( Ⓕ in Fig.)
(11) Remove 2 screws and remove power supply left side cover. ( Ⓖ in Fig.)

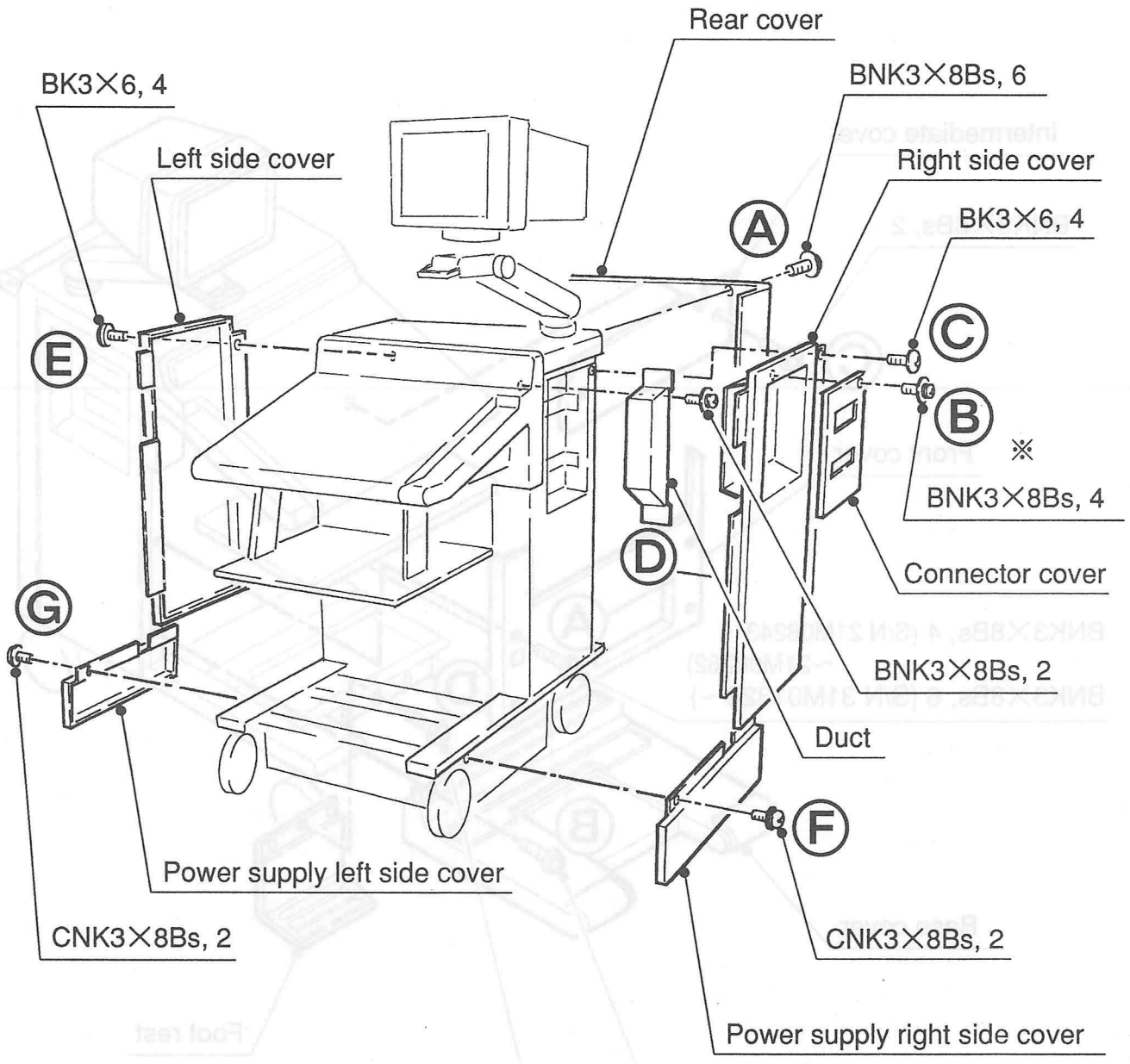


※ Do not remove the connector cover the units subsequent to S/N 21M08252.

Fig. 4

## 5. Panel frame opening procedure

(1) Loosen to remove three (3) screws and open the panel frame, and put the stay in the notch of the upper cover stationary plate and fix. (Ⓐin Fig. )

(2) Loosen to remove two (2) E-ring and two (2) shaft of the brind cover, and take the cover away. (Ⓑin Fig. )

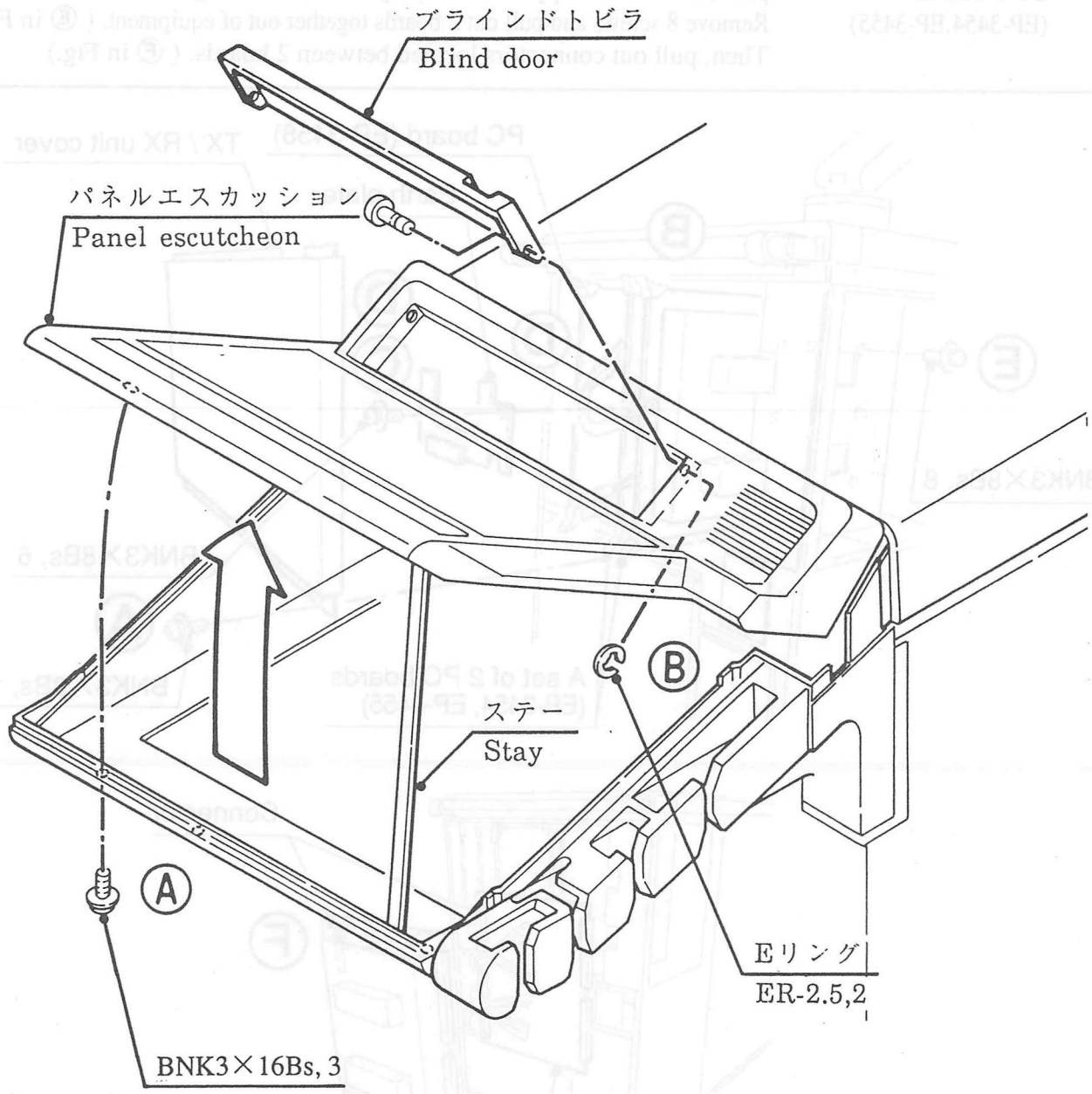


Fig.5

## 6. How to Pull out PC Board of TX / RX Unit (GEU-65) and How to Remove Unit

Note: See Dismounting flowchart.

● How to Pull out PC Board

(1) Remove 16 screws and remove TX / RX unit cover. ( Ⓐ in Fig.)
Then PC board can be taken out. ( Ⓑ in Fig.)

※ PC board specified below, however, shall be pulled out after completion of operations referred to below.

○ 3rd PC board thru 5th counted from the left ・・・ Remove 6 screws and remove earth plate. ( Ⓒ in Fig.)

○ A set of 2 PC boards (EP-3454,EP-3455) ・・・・・・ Remove 6 screws to remove earth plate.After that, pull out EP-3458 approximately by half. ( Ⓓ in Fig.)
Remove 8 screws and pull out 2 boards together out of equipment. ( Ⓔ in Fig.)
Then, pull out connectors located between 2 boards. ( Ⓕ in Fig.)

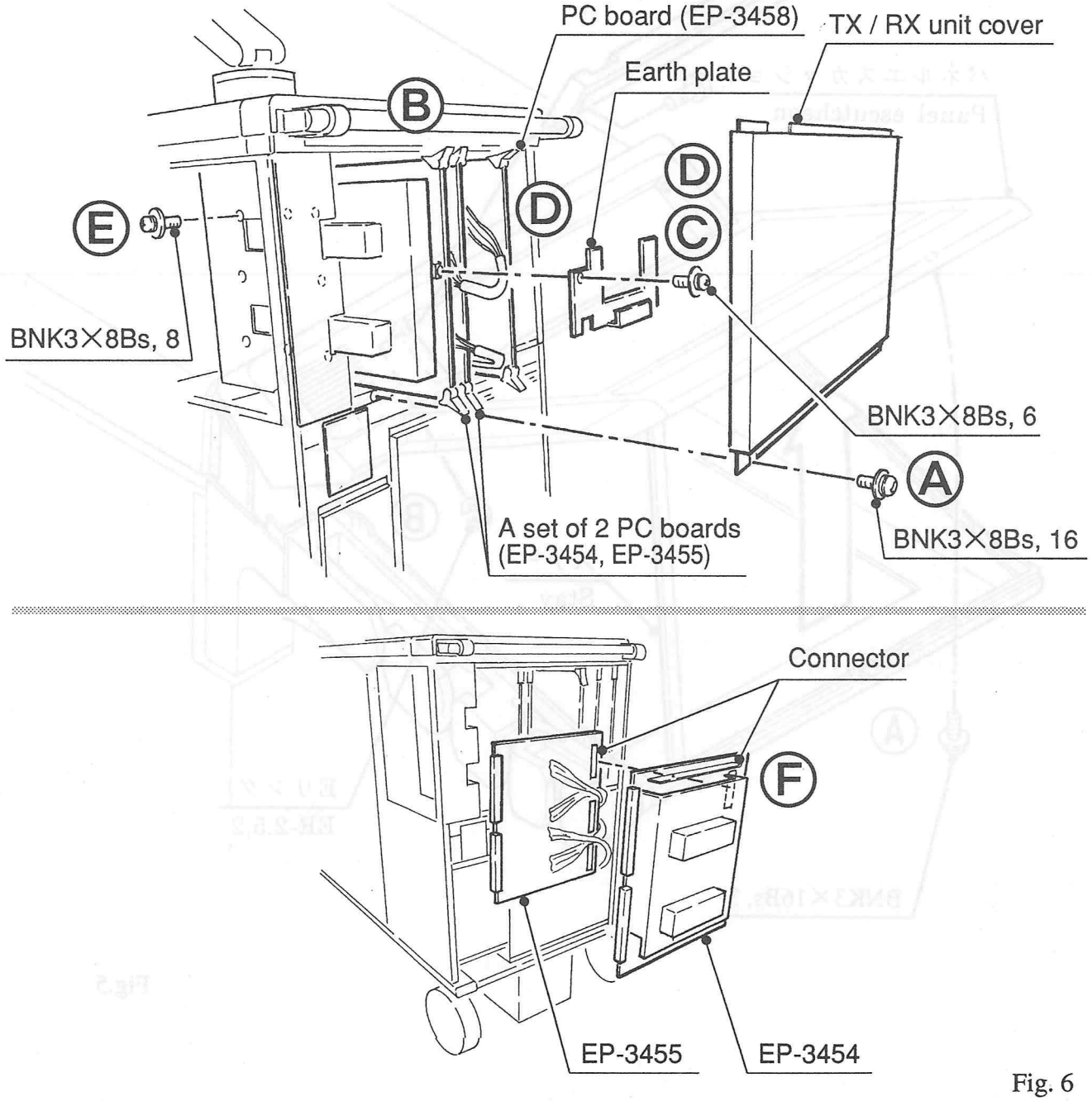


Fig. 6

● How to Remove Unit

(2) Remove 2 screws of earth plate on left side. ( Ⓐ in Fig.)

(3) Remove 4 screws and remove TX /RX unit. ( Ⓑ in Fig.)
(Remove all the cables connected)

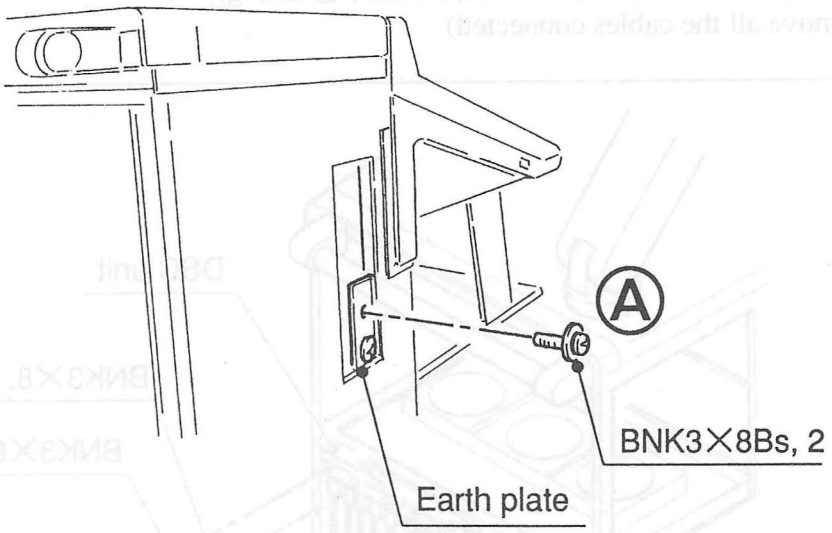


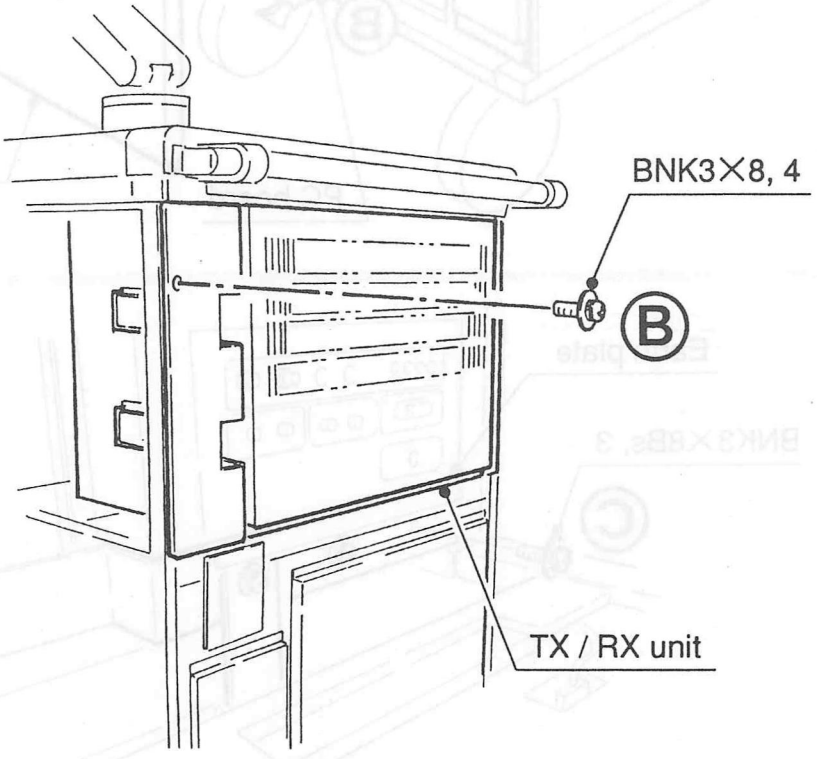


Fig. 7

## 7. How to Pull out PC Board of DSC Unit (UIM-326) and How to Remove Unit

Note: See Dismounting flowchart.

- How to Pull out PC Board
  - (1) Remove 14 screws and remove DSC unit. ( Ⓐ in Fig.)
    Then PC board can be taken out.( Ⓑ in Fig.)
- How to Remove Unit
  - (2) Remove 3 screws of earth board on front side of equipment. ( Ⓒ in Fig.)
  - (3) Remove 6 screws and remove DSC unit. ( Ⓓ in Fig.)
    (Remove all the cables connected)

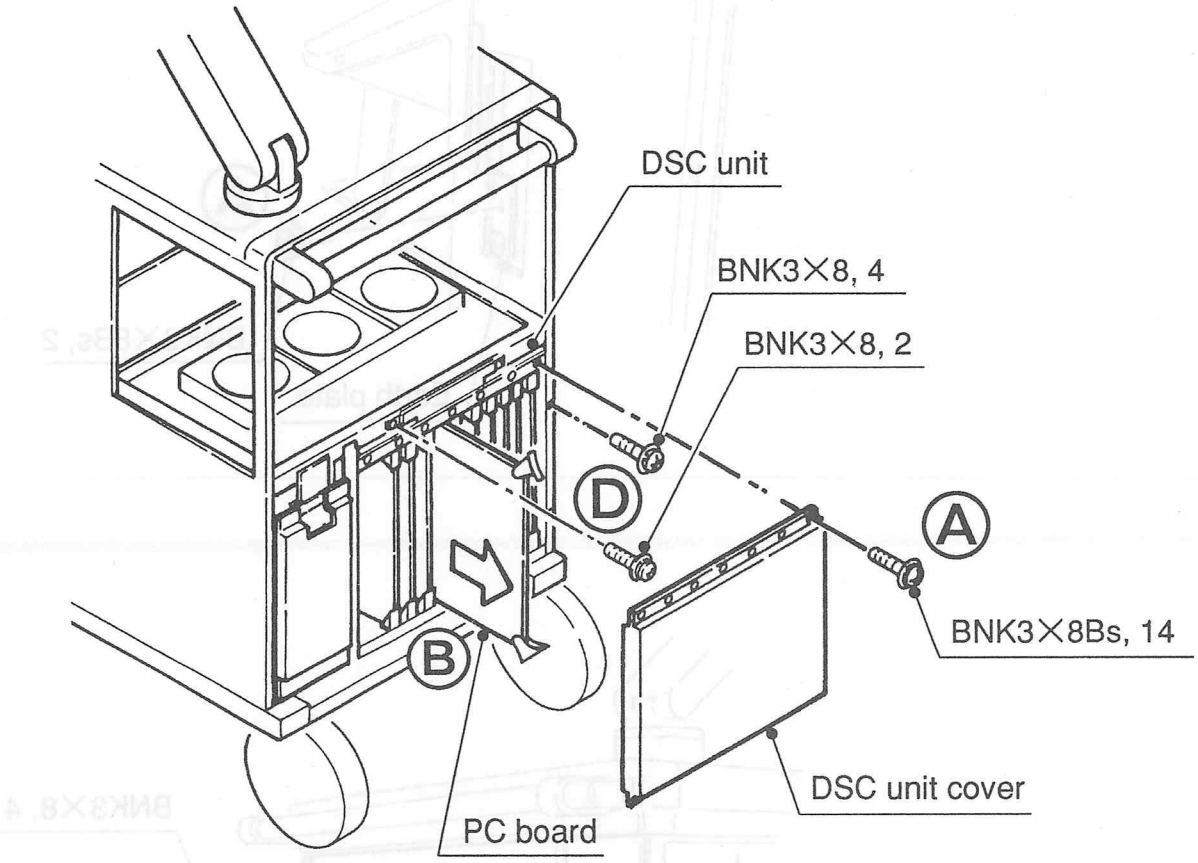


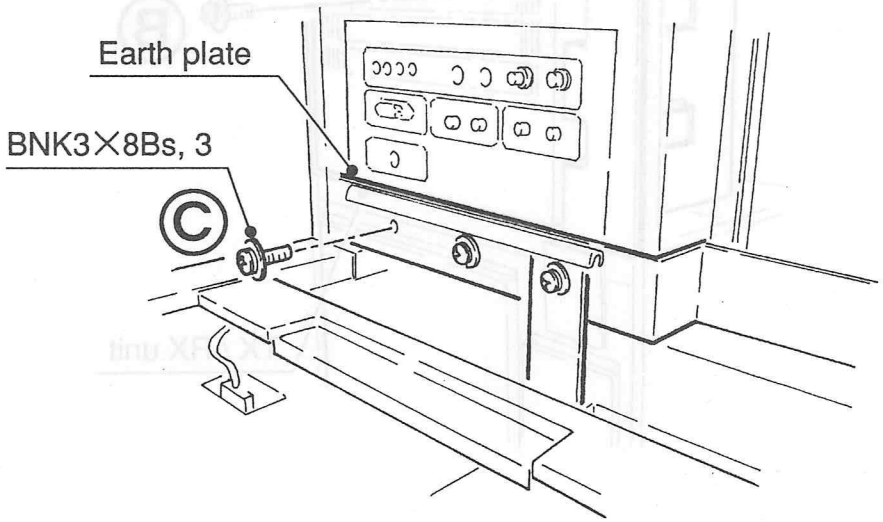


Fig. 8

## 8. How to Remove Power supply Unit (PSU-S680C)

Note : Make sure to turn off power supply of the device and lock the caster. And power supply unit weighs very heavily. Use utmost care to carry out operation, accordingly

(1) When the isolation transformer is provided, remove the connector. ( Ⓐ in Fig.)

(2) Remove all the cables connected to connector panel on the right side of the power supply unit (PSU-S680C). ( Ⓑ in Fig.)

(3) Remove 3 screws of earth board on front side of equipment. ( Ⓒ in Fig.)

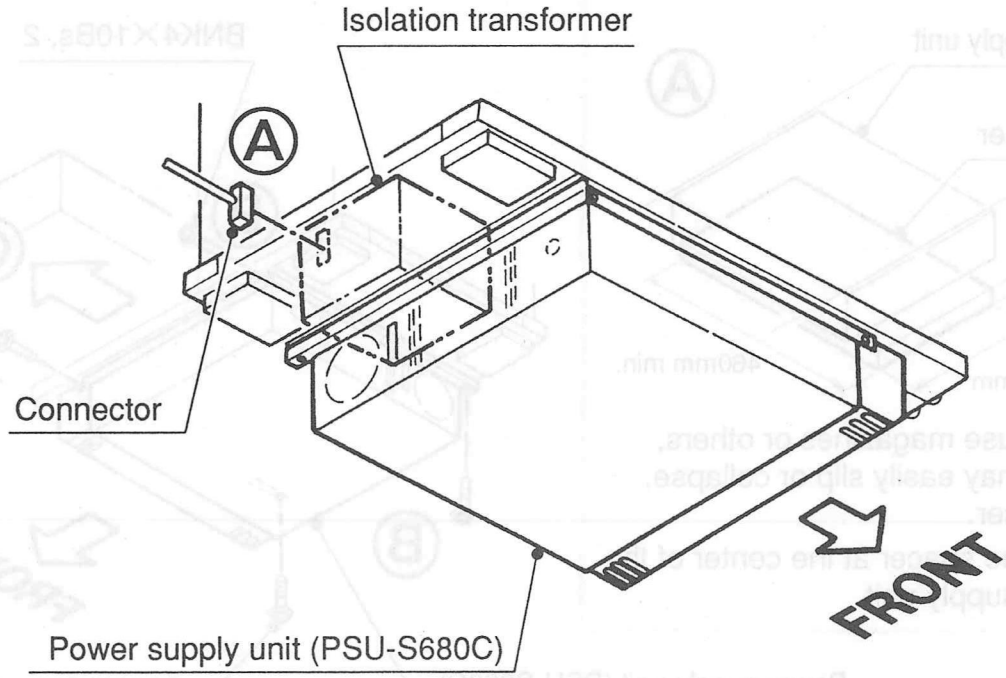


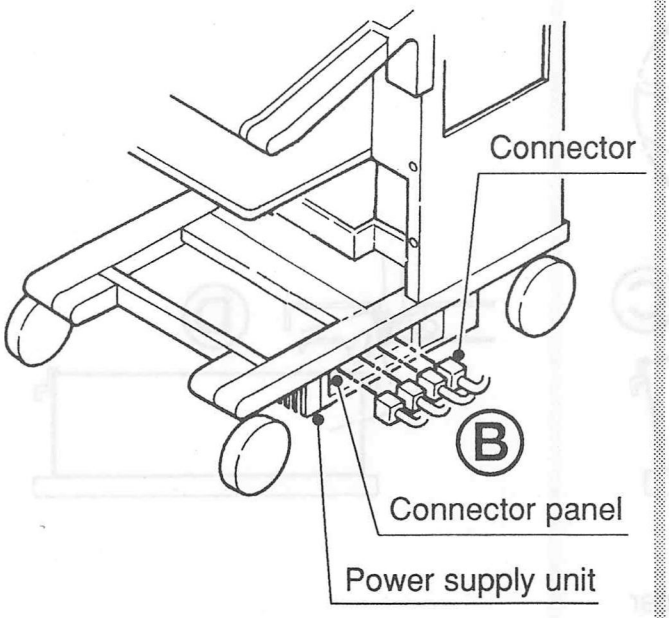


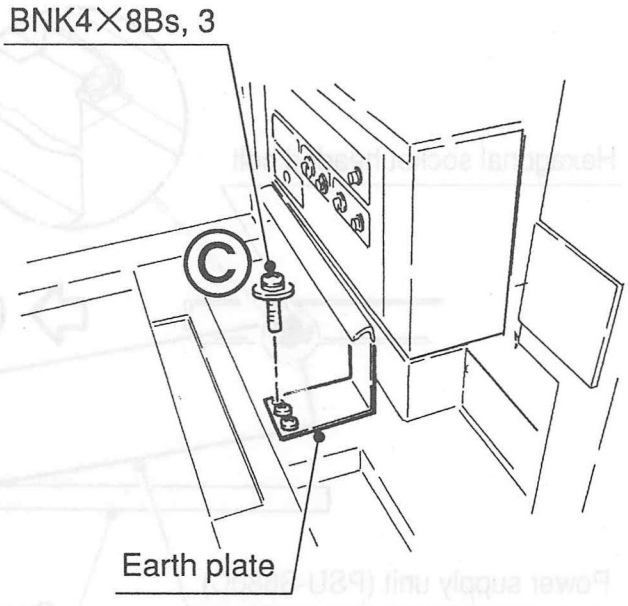


Fig. 9

(4) Place the spacers under the power supply unit. ( Ⓐ in Fig.)
(As for details of the spacer, following drawing)

(5) Loosen to remove 2 screws under the right side face and 2 screws of the left side face respectively. ( Ⓑ in Fig.)

(6) Take out the power supply unit from the left side. ( Ⓒ in Fig.)

(7) As the power supply unit is struck to the hexagonal socket headed bolt as in Fig. 11 and stopped, put the hand from the upper part of the box and lift the power supply unit, and remove the unit over the hexagonal socket headed bolt. ( Ⓓ in Fig.)

※ Precautions about spacer

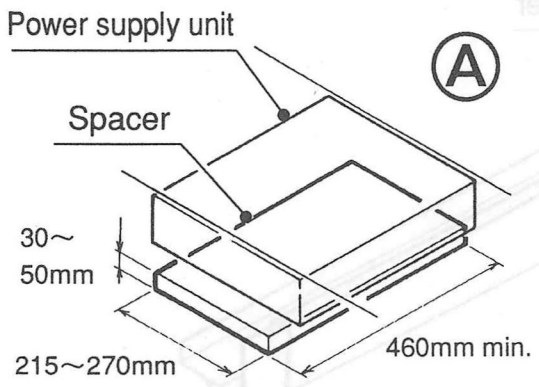


○ Do not use magazines or others, which may easily slip or collapse, as spacer.

○ Place the spacer at the center of the power supply unit.

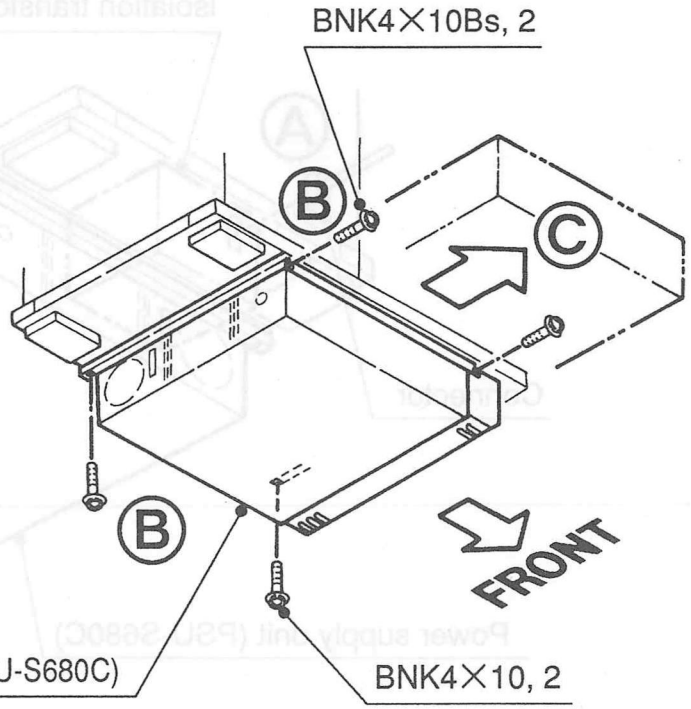


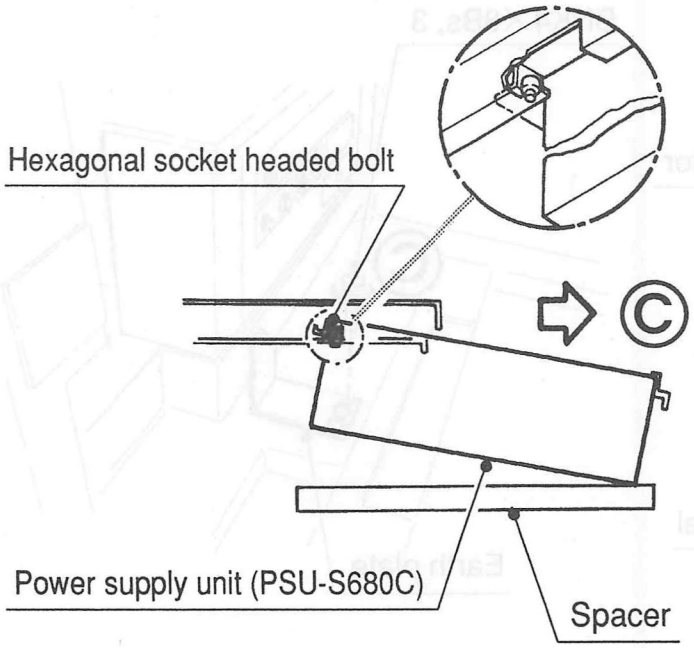


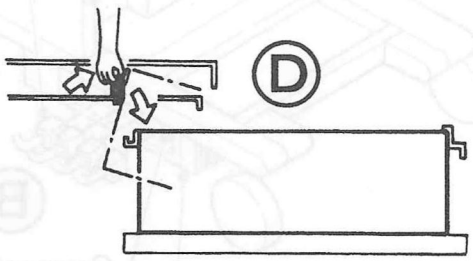


Fig. 10

## 9. How to Remove PC Board

Note: See Dismounting flowchart.

※ Remove all the cables connected to the PC board.

- How to Remove PC Board (EP-3265)
  (1) Loosen to remove 9 screws and take the PC board (EP-3265) away. ( Ⓐ in Fig.)
- How to Remove PC Board (EP-2512)
  (1) Loosen to remove respective hexagonal socket headed screws, and remove 8 nuts. ( Ⓑ in Fig.)
  (2) Loosen to remove 8 screws and take the PC board (EP-2512) away. ( Ⓒ in Fig.)
- How to Remove PC Board (EP-2510)
  (1) Remove 2 nuts, spring washers and washers respectively and take the horn jack out of the panel frame. ( Ⓓ in Fig.)
  (2) Loosen to remove 2 screws and take the PC board (EP-2510) out of the fixing plate. ( Ⓔ in Fig.)
- How to Remove PC Board (EP-3143)
  (1) Loosen to remove 1 screw and take the PC board (EP-3143) away. ( Ⓕ in Fig.)

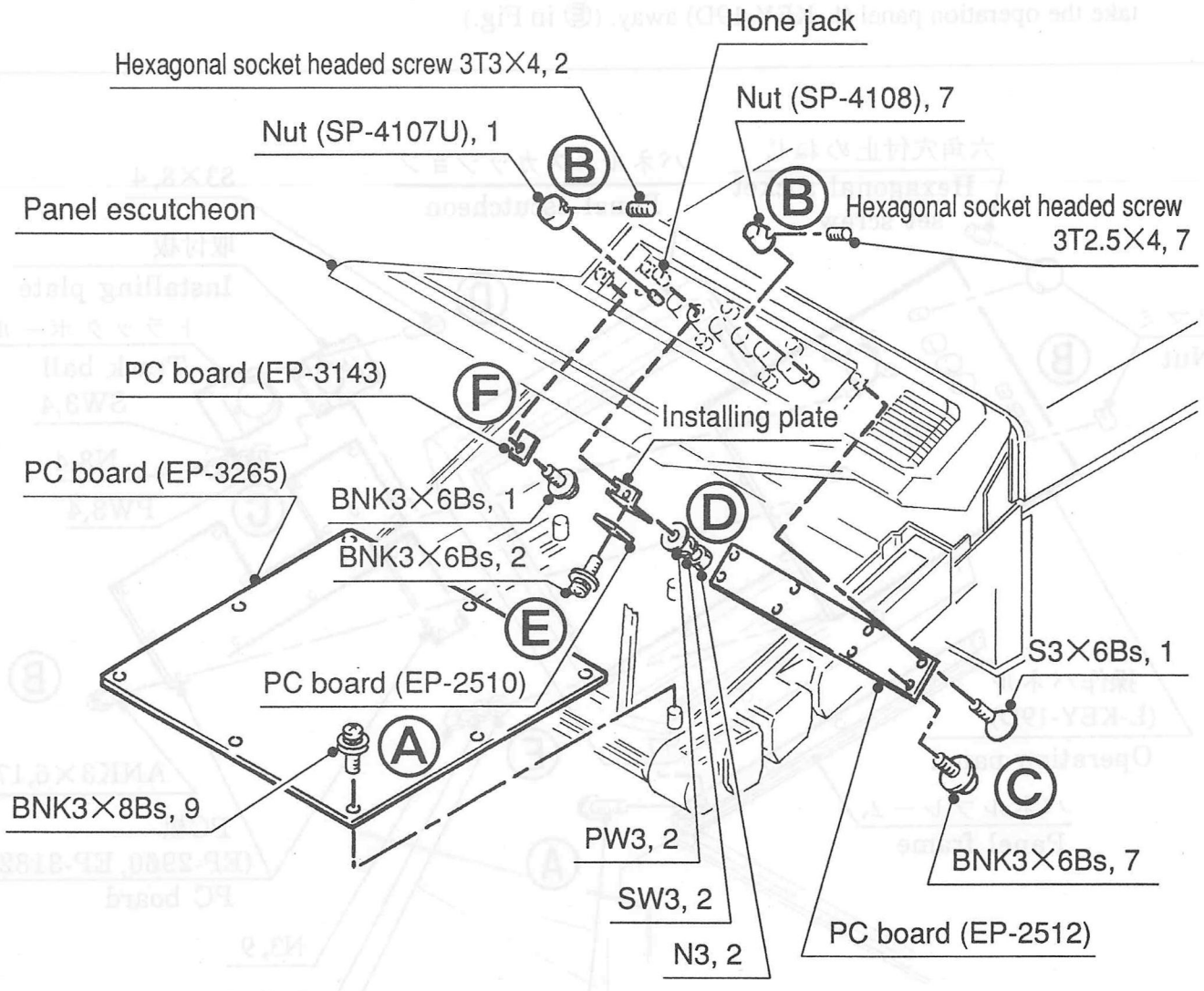


Fig. 11

## 10. How to Remove Panel frame and PC Board of Operation Panel

Note : See Dismounting flowchart.

- How to Remove Panel frame

(1) Loosen to remove five (5) screws of the panel frame and take it away.(Ⓐin Fig. )

- How to Remove PC Board (EP-2960 , EP-3182)

※ EP-2960 and EP-3182 are connected by the flexible cable , then take them out together.

(1) Remove fifteen (15) nuts , and loosen to remove seventeen (17) screws of the PC boards (EP-2960 , EP-3182) and take them away. (Ⓑin Fig. ) (Remove all the cables connected)

- How to Remove Track Ball

(1) Remove four (4) nuts , spring washers and washers respectively , and take the track ball out of the operation panel. (Ⓒin Fig. ) (Remove all the cables connected)

(2) Loosen to remove four (4) screws and take the track ball out of the installing plate. (Ⓓin Fig. )

- How to Remove Operation Panel (L-KEY-19D)

(1) Remove nine (9) nuts, spring washers and washers respectively, and take the operation panel (L-KEY-19D) away. (Ⓔ in Fig.)

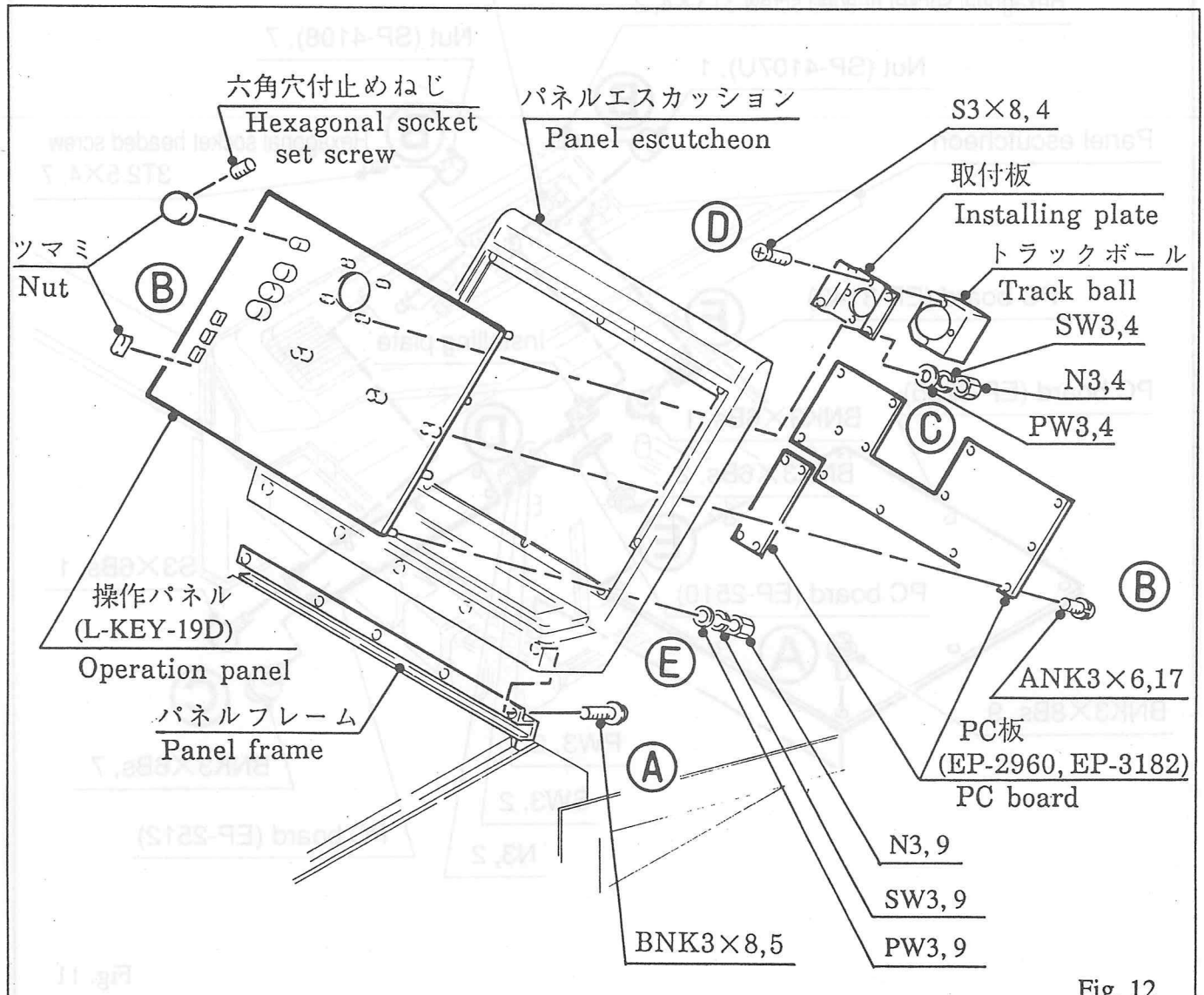


Fig. 12

## 11. How to Remove Observation Monitor Unit (IP-1230C)

NOTE : Do not remove monitor before tightening monitor arm knob.

(1) Remove 4 screws and remove monitor rear cover. ( Ⓐ in Fig.)

(2) Disconnect connector in monitor. ( Ⓑ in Fig.)

(3) Remove 4 screws and remove lamp unit from monitor arm. ( Ⓒ in Fig.)

(4) Remove 2 screws and remove monitor from monitor arm. ( Ⓓ in Fig.)

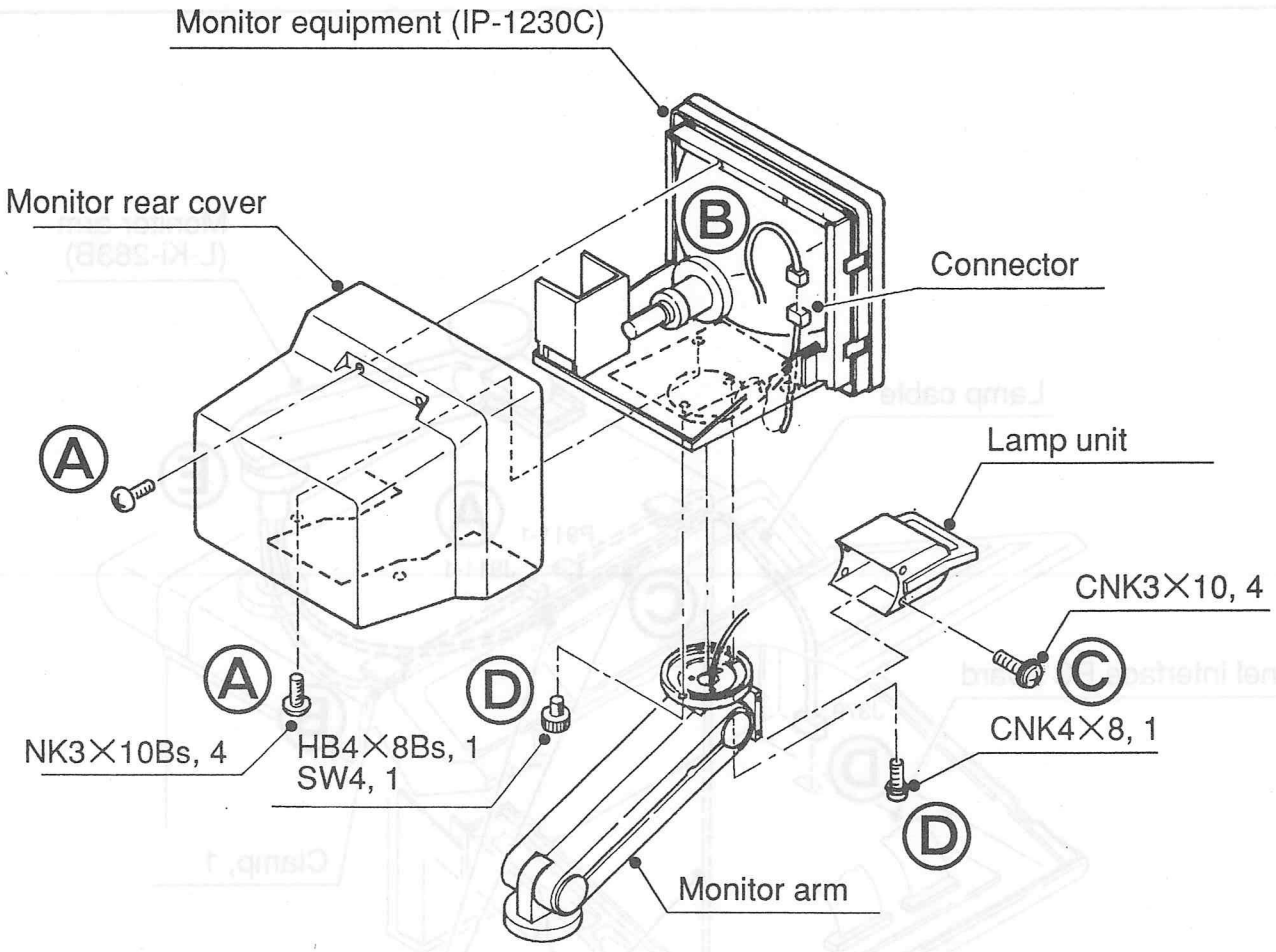


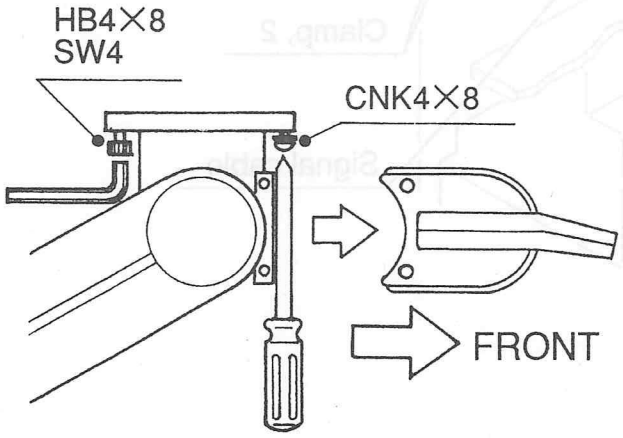


● FRONT SIDE: Remove CNK4×8 with a screw driver.

● REAR SIDE: Remove HB4×8 SW4 with a hexagonal wrench.

Fig. 13

## 12. How to remove Monitor Arm (L-Ki-263B)

(1) Disconnect the relay connectors (J911-1, P911-1) of the signal cable connected to the DSC unit connector panel. ( Ⓐ in Fig.)
(2) Remove signal cable from a clamp. ( Ⓑ in Fig.)
(3) Remove lamp cable from 2 clamps on the panel escutcheon. ( Ⓒ in Fig.)
(4) Disconnect the connector (J379) of the lamp cable from panel interface PC board. ( Ⓓ in Fig.)
(5) Pull up the monitor arm and remove it from the body. ( Ⓔ in Fig.)

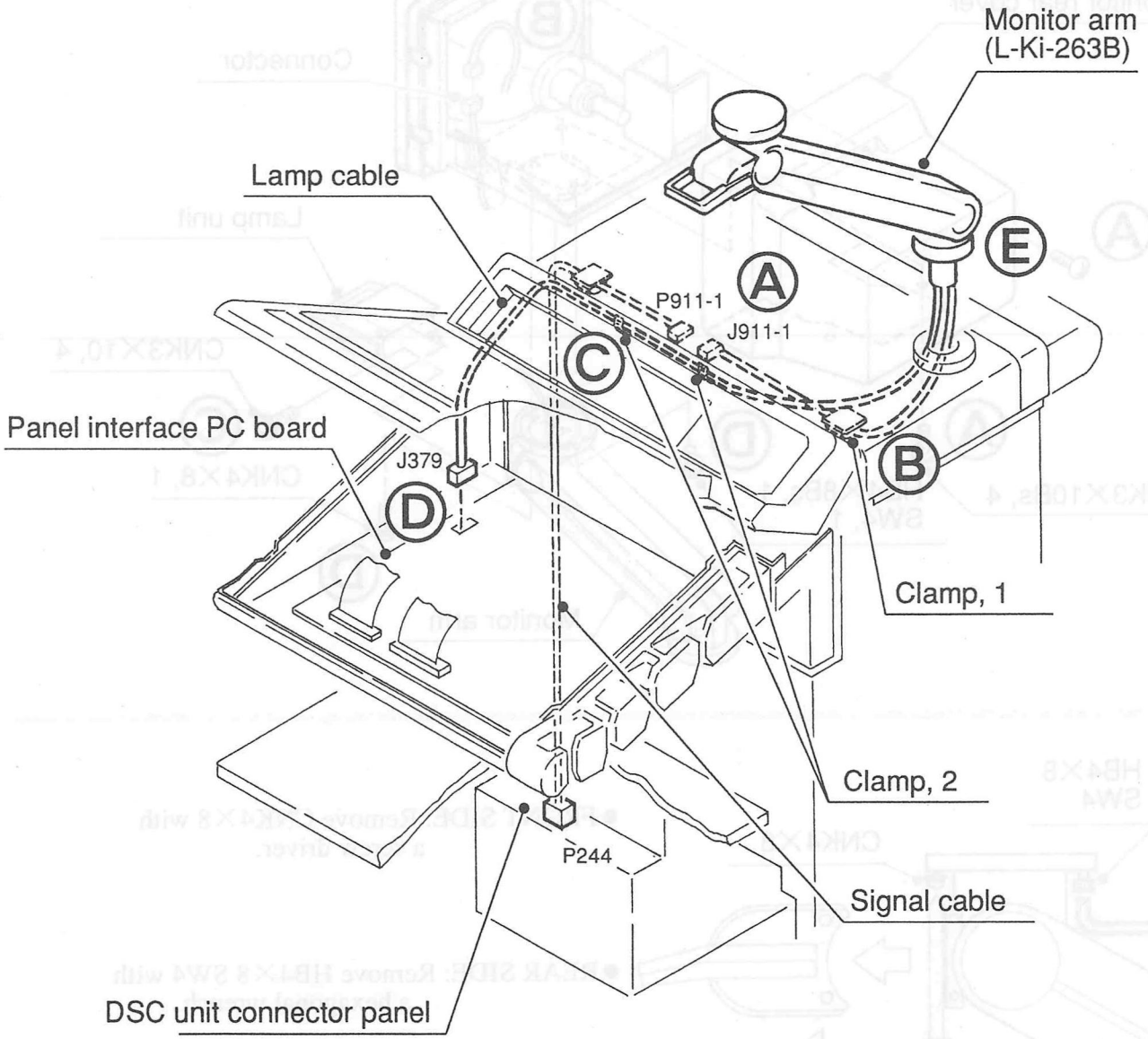


Fig. 14

## 13. How to Remove Top Cover

(1) Remove 2 hexagonal socket headed bolts and remove the bush. ( Ⓐ in Fig. )

(2) Remove 4 hexagonal socket headed bolts and 4 spring washers, and remove the spacer. ( Ⓑ in Fig.)

(3) Remove 4 upper hexagonal socket headed bolts and 4 spring washers, and remove the monitor pedestal. ( Ⓒ in Fig.)

(4) Remove 4screws and remove top cover. ( Ⓓ in Fig.)

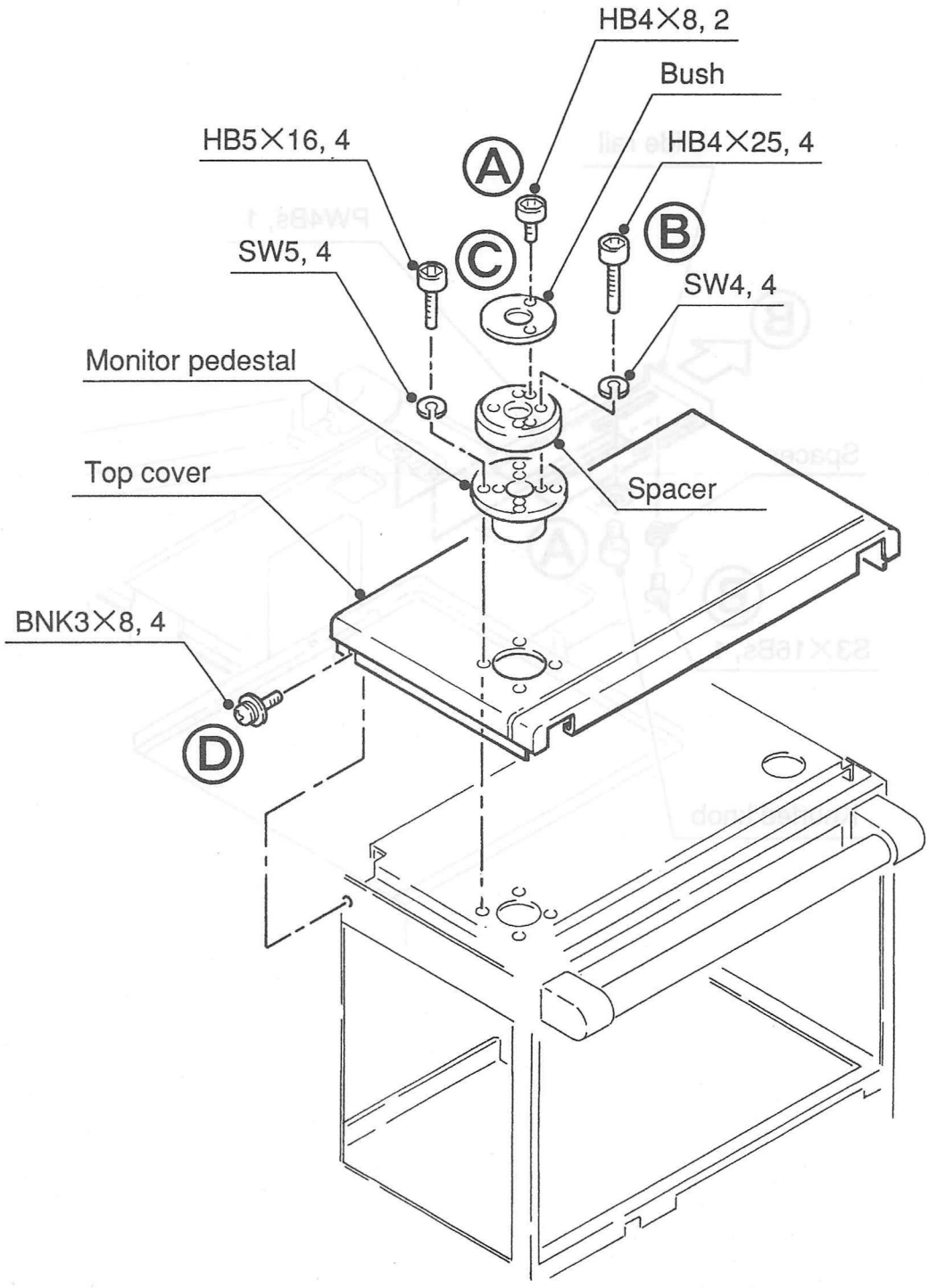


Fig. 15

## 14. How to Remove VTR Remote Controller Rack

(1) Remove the knurled knob and 1 washer. (Ⓐ in Fig.)
(2) Remove a screw and remove spacer and pull the slide rail and remove it. ( Ⓑ in Fig.)

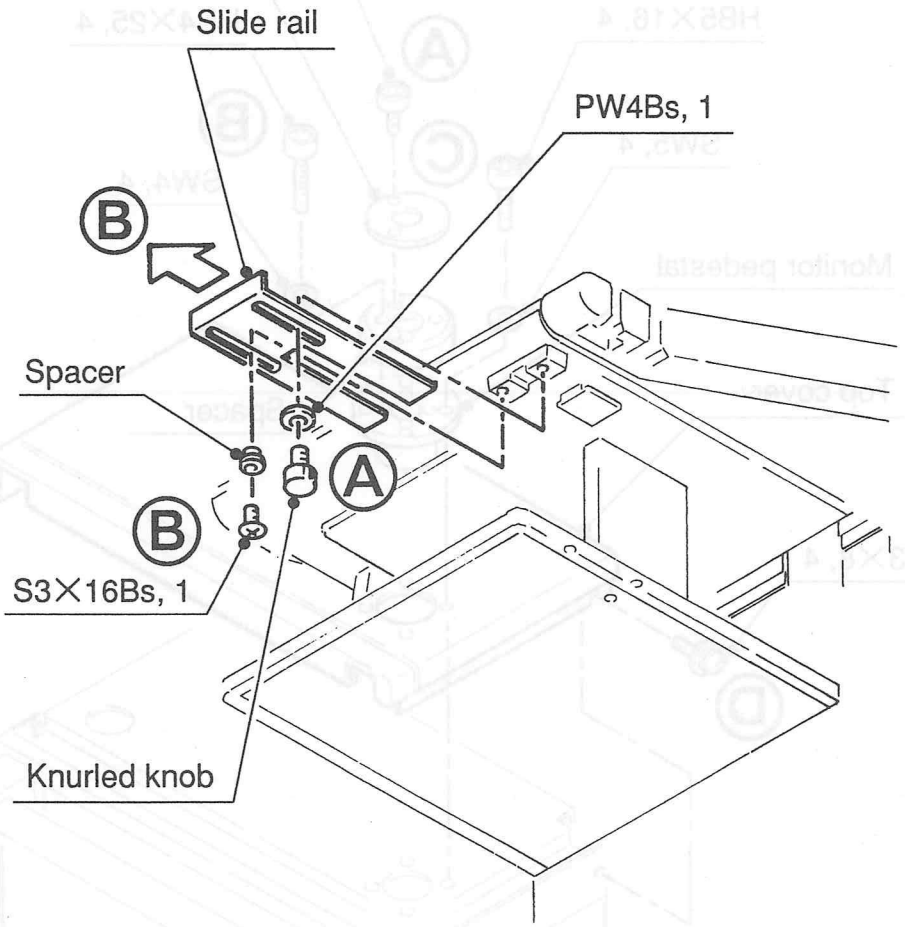


Fig. 16

## 15. How to Remove Panel Lower Cover

(1) Remove 3 screws and remove mounting block. ( Ⓐ in Fig.)
(2) Remove 2 screws and remove remote control rail. ( Ⓑ in Fig.)
(3) Remove 2 screws and remove hinge. ( Ⓒ in Fig.)
(4) Remove 2 screws respectively and remove 2 arms. ( Ⓓ in Fig.)

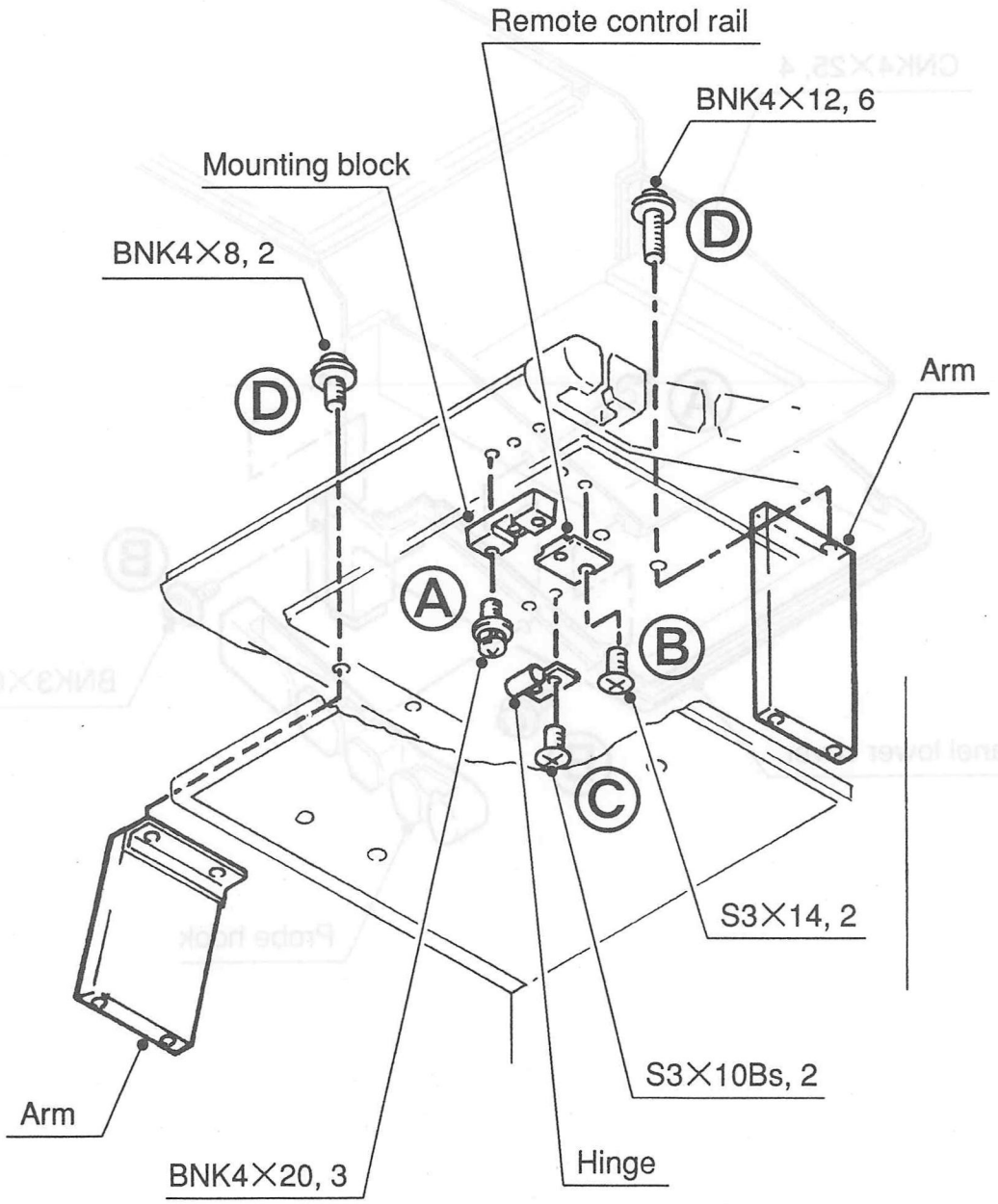


Fig. 17

(5) Remove 4 screws and remove Probe hook. ( Ⓐ in Fig.)
(6) Remove 8 screws and remove panel lower cover. ( Ⓑ in Fig.)

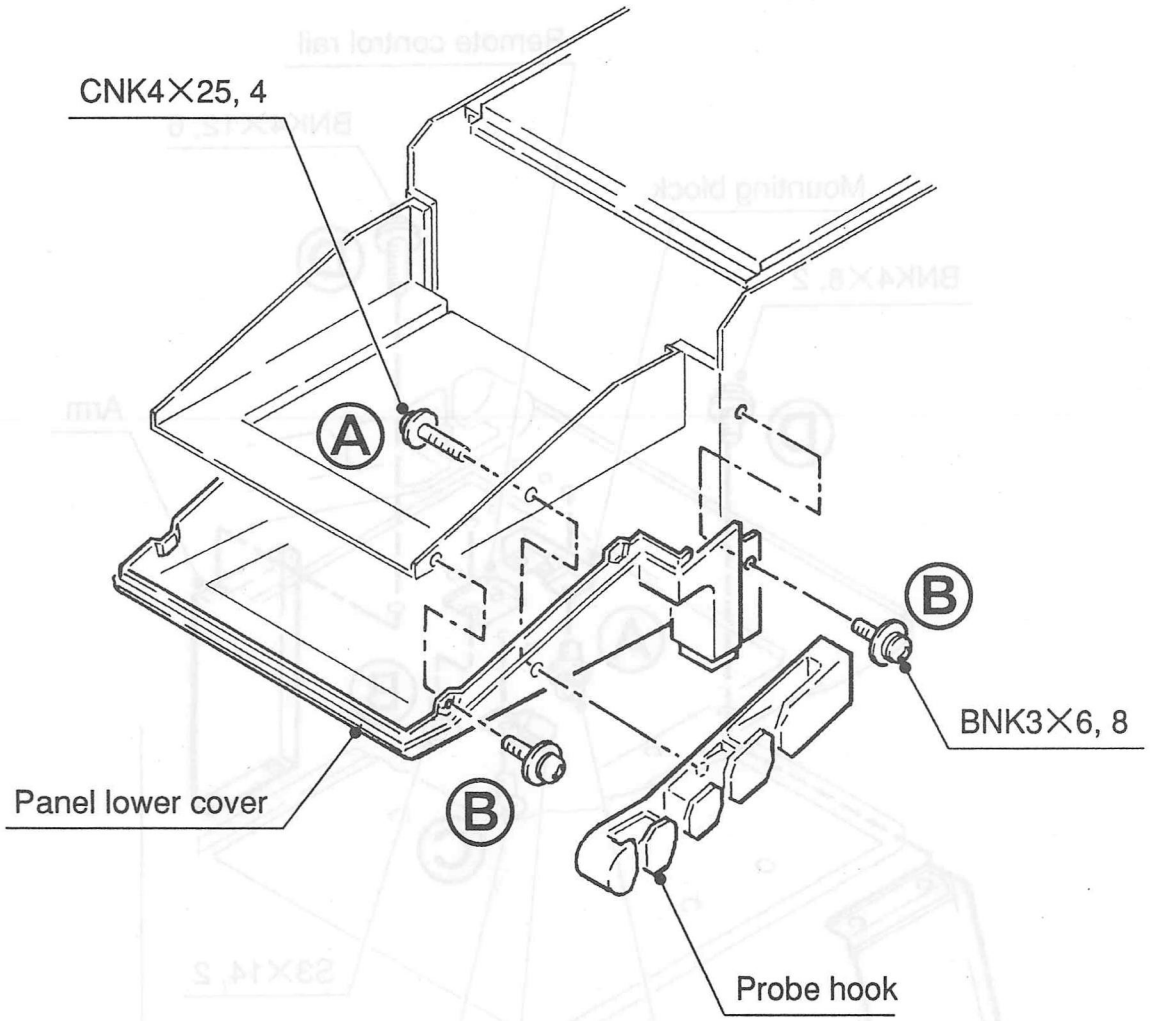


Fig. 18

Aloka

# SSD-680EX据付要領書
# INSTALLATION PROCEDURES

必要な工具：M4プラスドライバー，M2.6プラスドライバー（組立先で用意すること）

注意: 危険防止のため、モニタを据え付け終わるまでノブを緩めないこと。
(バネが強く、いきなりモニタアームがはねあがるため。)

1. モニタ (IPC-1010, IPC-1010V, IPC-1230 ) の据付方法

(1) ロックピンを、上に引き上げ、モニタアームを、本体に対し90° の位置にする。(図1参照 )

Tool required : M4 philips head screwdriver , M2,6 philips head screwdriver (To be arranged by assembly plant.)

Note: For safety, do not loosen the knob until you will have completely installed the monitor.
( The monitor arm will be jumped up suddenly due to its strong spring. )

1. Installing monitor (IPC-1010, IPC-1010V, IPC-1230 )

(1) Pull up the lock pin and place the monitor arm at 90° to the body member. (See Fig. 1 )

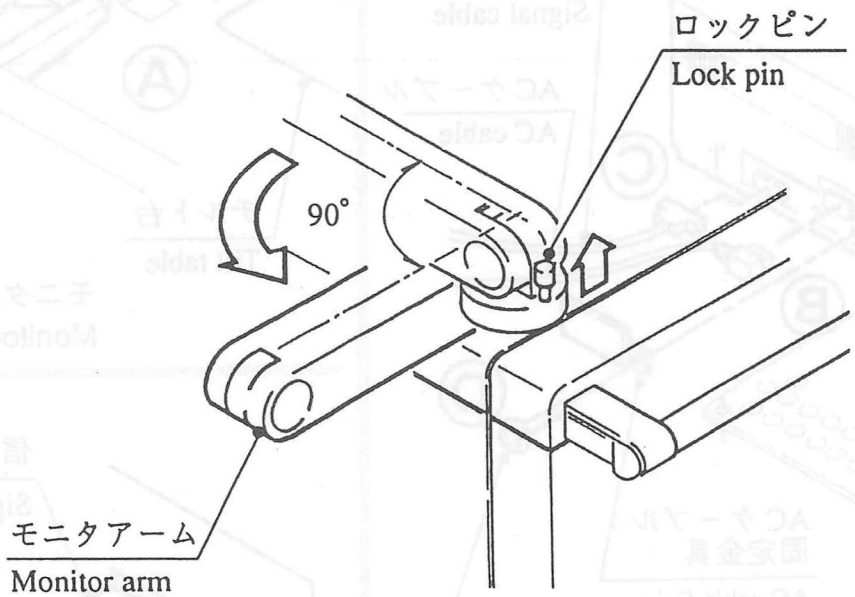


図1 Fig.1

○ モニタ (IPC-1010, 1010V )

(2) チルト台のつめをモニタ底面のフック金具にひっかけてから、モニタを、チルト台にねじ2本で取付ける。( 図中 Ⓐ )

(3) ACケーブルを、モニタ背面に接続する。( 図中 Ⓑ )

(4) 信号ケーブルをモニタに接続し、取付けねじ2本で固定する。(図中 Ⓒ )

(5) ACケーブル固定金具を、ねじ2本で取付ける。(図中 Ⓓ )

○ Monitor (IPC-1010, 1010V )

(2) Hook the claw of the tilt table onto the hook metal fitting on the under side of the monitor and then , mount the monitor on the tilt table with 2 screws. ( Ⓐ in Fig.)

(3) Connect the AC cable to the back of the monitor. ( Ⓑ in Fig.)

(4) Connect the sibnal cable to the monitor and fasten 2 fixing screws. ( Ⓒ in Fig.)

(5) Install the AC cable fixing metal fitting with 2 screws. ( Ⓓ in Fig. )

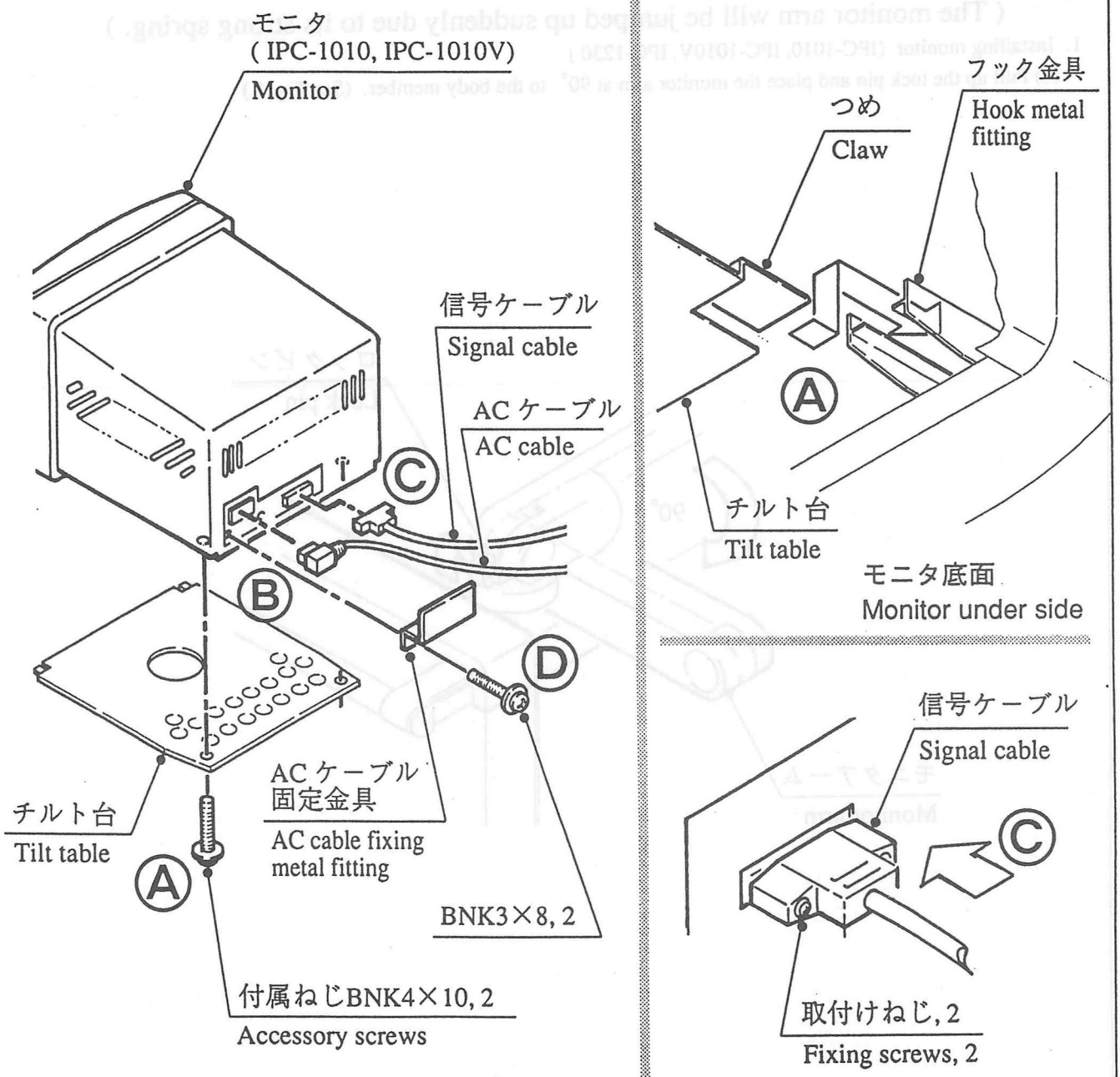


図2 Fig. 2

○ モニタ (IPC-1230W , -1230WV)

(2) チルト台のつめをモニタ底面のスリットにひっかけてから、
モニタを、チルト台にねじ4本で取付ける。( 図中 Ⓐ )

(3) ACケーブルを、モニタ背面に接続する。( 図中 Ⓑ )

(4) 信号ケーブルをモニタに接続し、取付けねじ2本で固定する。(図中 Ⓒ )

(5) ACケーブル固定金具を、ねじ2本で取付ける。(図中 Ⓓ )

○ Monitor (IPC-1230W , -1230WV).

(2) Hook the claw of the tilt table onto the slit on the under side of the monitor and then , mount the monitor on the tilt table with 4 screws. ( Ⓐ in Fig.)

(3) Connect the AC cable to the back of the monitor. ( Ⓑ in Fig.)

(4) Connect the sibnal cable to the monitor and fasten 2 fixing screws. ( Ⓒ in Fig.)

(5) Install the AC cable fixing metal fitting with 2 screws. ( Ⓓ in Fig. )

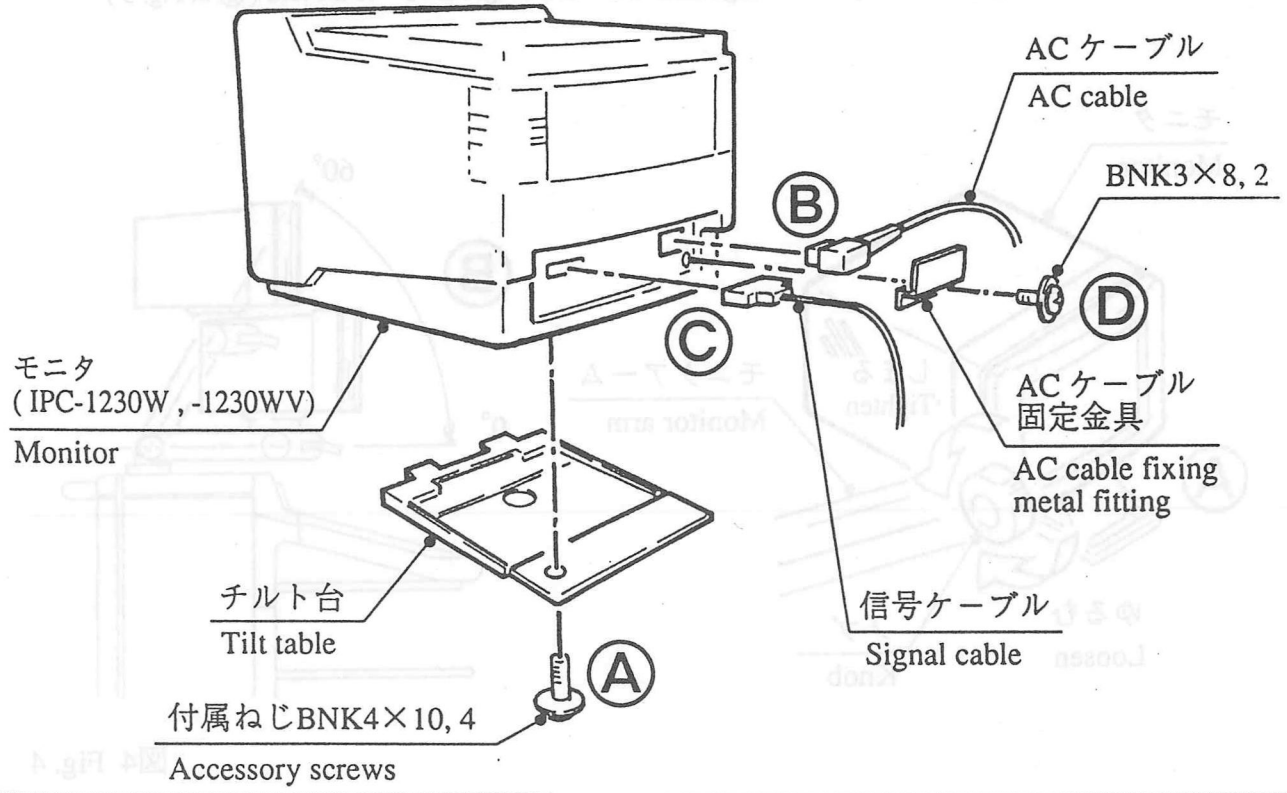


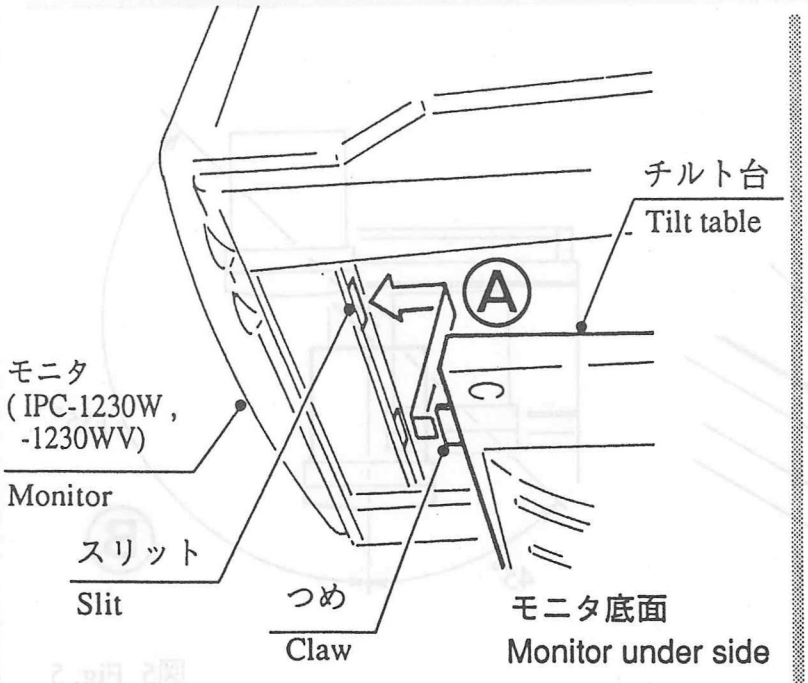


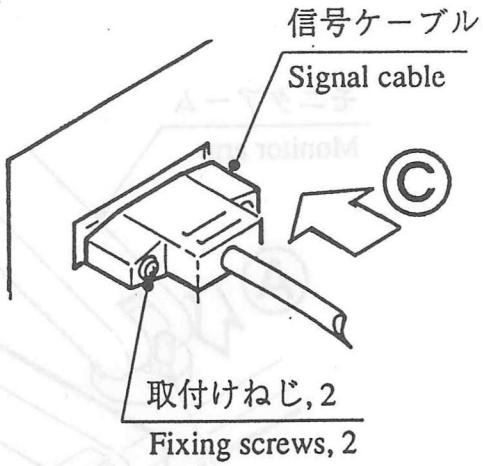


図3 Fig. 3

2. モニタの動作方法

(1) モニタの上下移動はノブをゆるめて行い、適正位置でノブを締めて固定する。(図4 Ⓐ)

(2) モニタアームの上下の可動範囲は、0° ～ 60° の範囲。(図4 Ⓑ)

(3) モニタアームの左右旋回はモニタアームのロックピンを上に引き上げて行う。(図5 Ⓐ)

(4) モニタアームの左右の可動範囲は、左に45° 右に135° の範囲。(図5 Ⓑ)

2. Monitor arm maneuvering procedure

(1) To shift the monitor vertically, first loosen the arm knob, and after duly positioning the monitor, tighten the knob to fasten the monitor down. (Ⓐ in Fig. 4)

(2) The monitor arm swings vertically over a 0° to 60° range. (Ⓑ in Fig. 4)

(3) When turning the monitor arm right and left, pull up the lock pin of the monitor arm first. (Ⓐ in Fig. 5)

(4) The monitor arm swings horizontally over a range from 135° to the right to 45° to the left. (Ⓑ in Fig. 5)

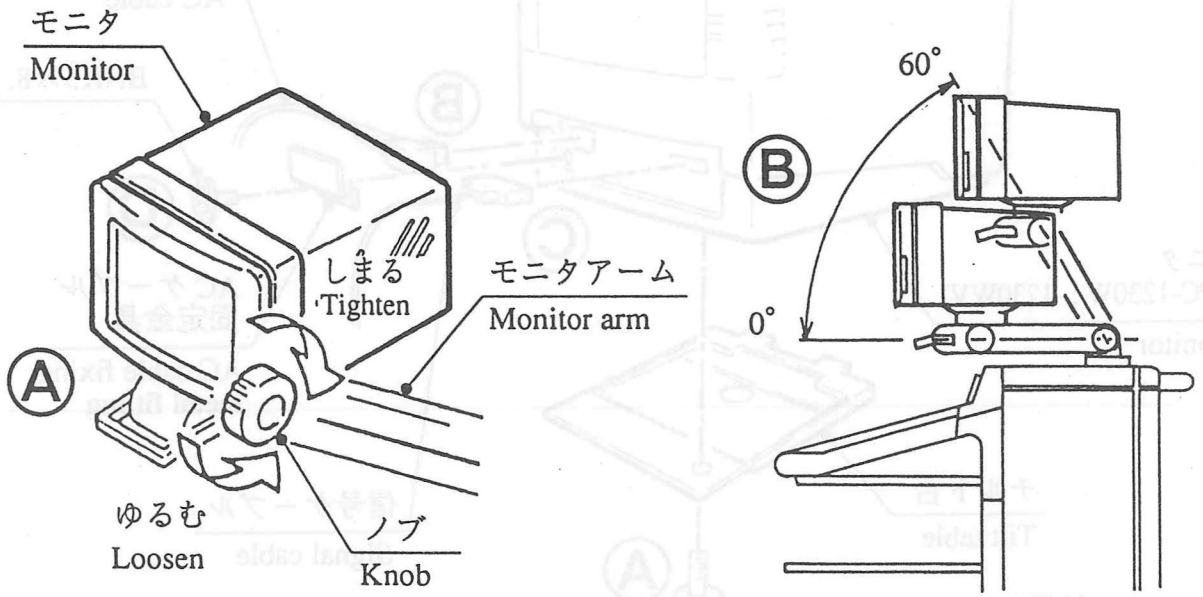


図4 Fig. 4

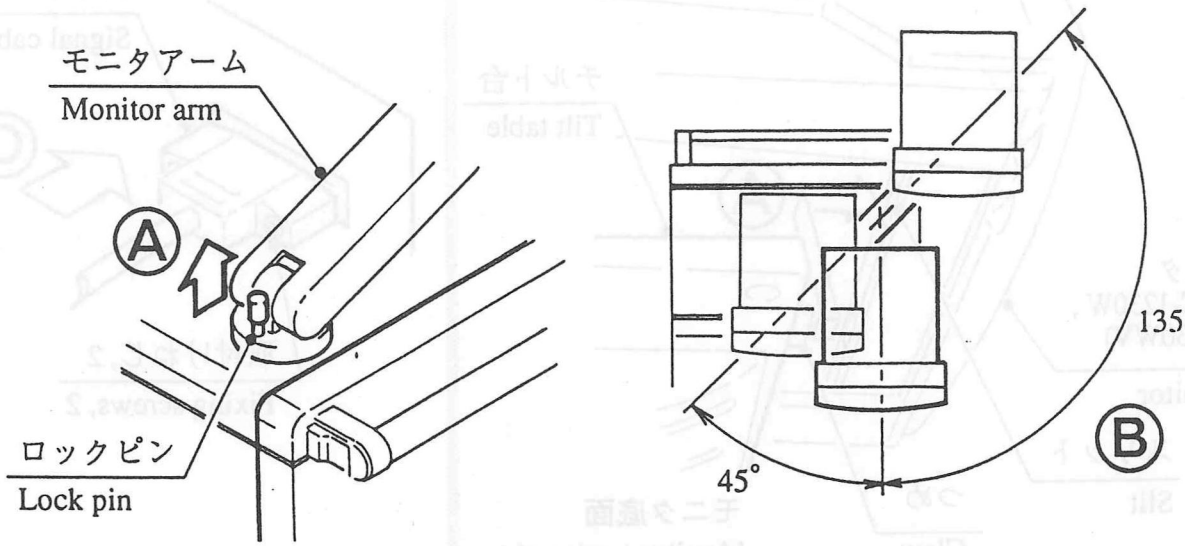


図5 Fig. 5

3. プローブ、及び、ケーブルハンガの取付方法
(1) ケーブルハンガを、本体に差し込む。(図中Ⓐ)
(2) コネクタを接続し、プローブをプローブホルダへ入れる。(図中Ⓑ)
(3) ゼリーボトルを、ゼリーホルダに置く。(図中Ⓒ)

3. Probe and cable hanger mounting procedure
(1) Insert the cable hanger in the main unit. (Ⓐ in Fig.)
(2) Mate the connector, stow probe holder. (Ⓑ in Fig.)
(3) Position a gel bottle on the gel holder. (Ⓒ in Fig.)

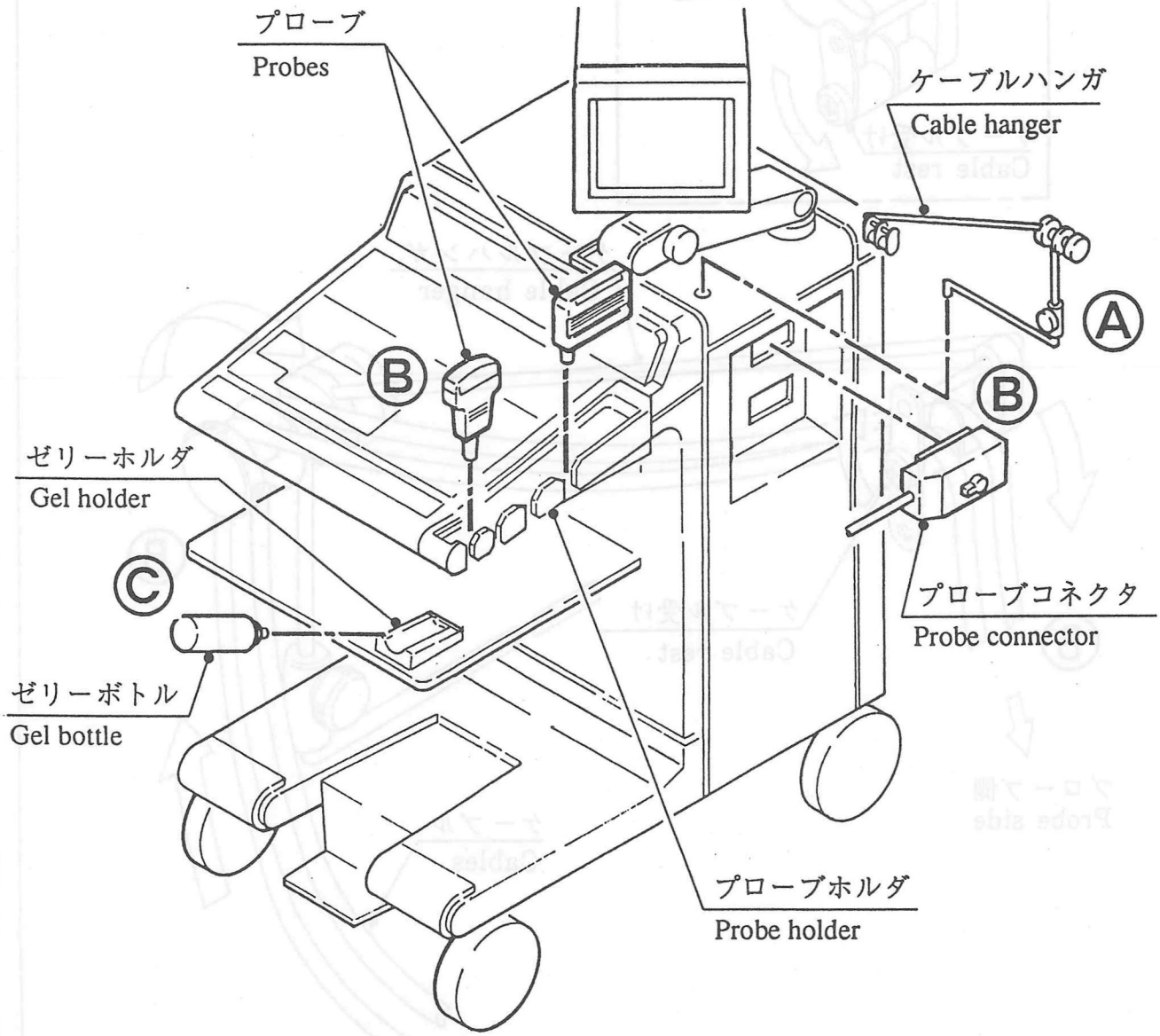


図6 Fig. 6

(3)ケーブル受の外側の部分を、下図の様に下に向ける。(図中Ⓐ)

(4)プローブのケーブルを、下図の様に引き回す。(図中Ⓑ)

(3)Orient the cable rest to have its outer end point downward as illustrated below. (Ⓐ in Fig.)

(4)Pass probe cables over the cable rest and elbow as illustrated below. (Ⓑ in Fig.)

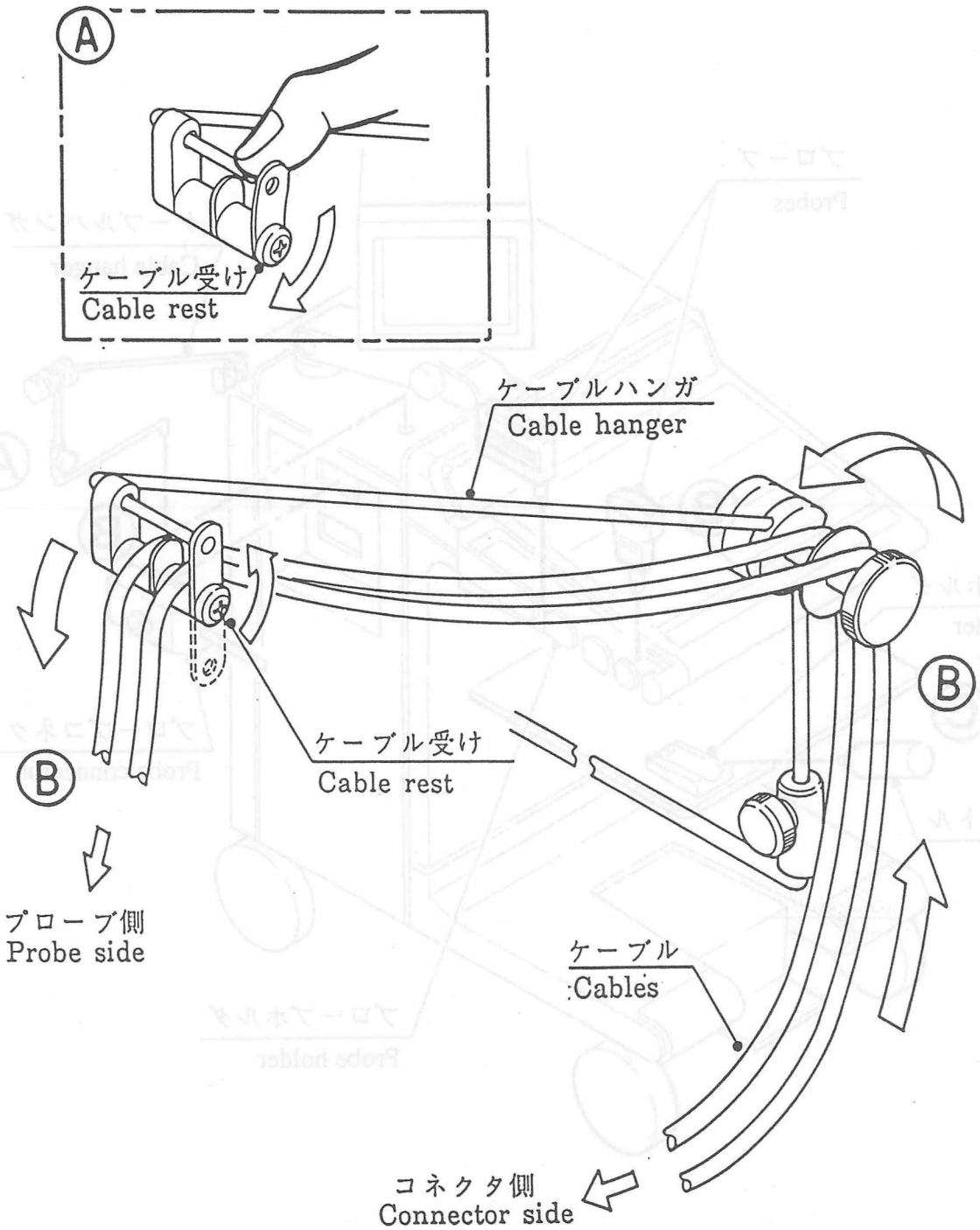


図7 Fig. 7

4.オプション機器の据付方法

●撮影装置(SSZ-600)

(1)中間カバーをねじ2本を外して取り外す。(図中Ⓐ)

(2)中間カバーの裏側に固定されているカメラ信号ケーブル・信号ケーブル・SSZ-600用電源ケーブルを、クランプより外して取り外す。(図中Ⓑ)

(3)撮影装置背面から出ている電源ケーブルを、本体から出ているSSZ-600用電源ケーブルに接続する。(図中Ⓒ)

(4)カメラ信号ケーブルと電源ケーブルを、中間カバーの切り欠きに通して、中間カバーを、(1)と逆の手順で取り付ける。(図中Ⓓ)

※電源ケーブルのコネクタは本体内部に押し込んでおく。

4.Optional equipment installing procedure

●Photographic equipment (SSZ-600)

(1)Remove the intermediate cover by removing the 2 screws. (Ⓐ in Fig.)

(2)Pull out the camera signal cable, signal cable and power supply cable for SSZ-600 from clanp on the rear side of the intermediate cover. (Ⓑ in Fig.)

(3)Connect the power supply cable extending from the back of photographic equipment with the power supply cable for SSZ-600 of the main unit. (Ⓒ in Fig.)

(4)Feed the camera signal cable and the power supply cable for SSZ-600 through the notch along the edge of the intermediate cover and fix the intermediate cover using the reverse procedure of (1). (Ⓓ in Fig.)

※Push the connector of power supply cable into the inner of the main unit.

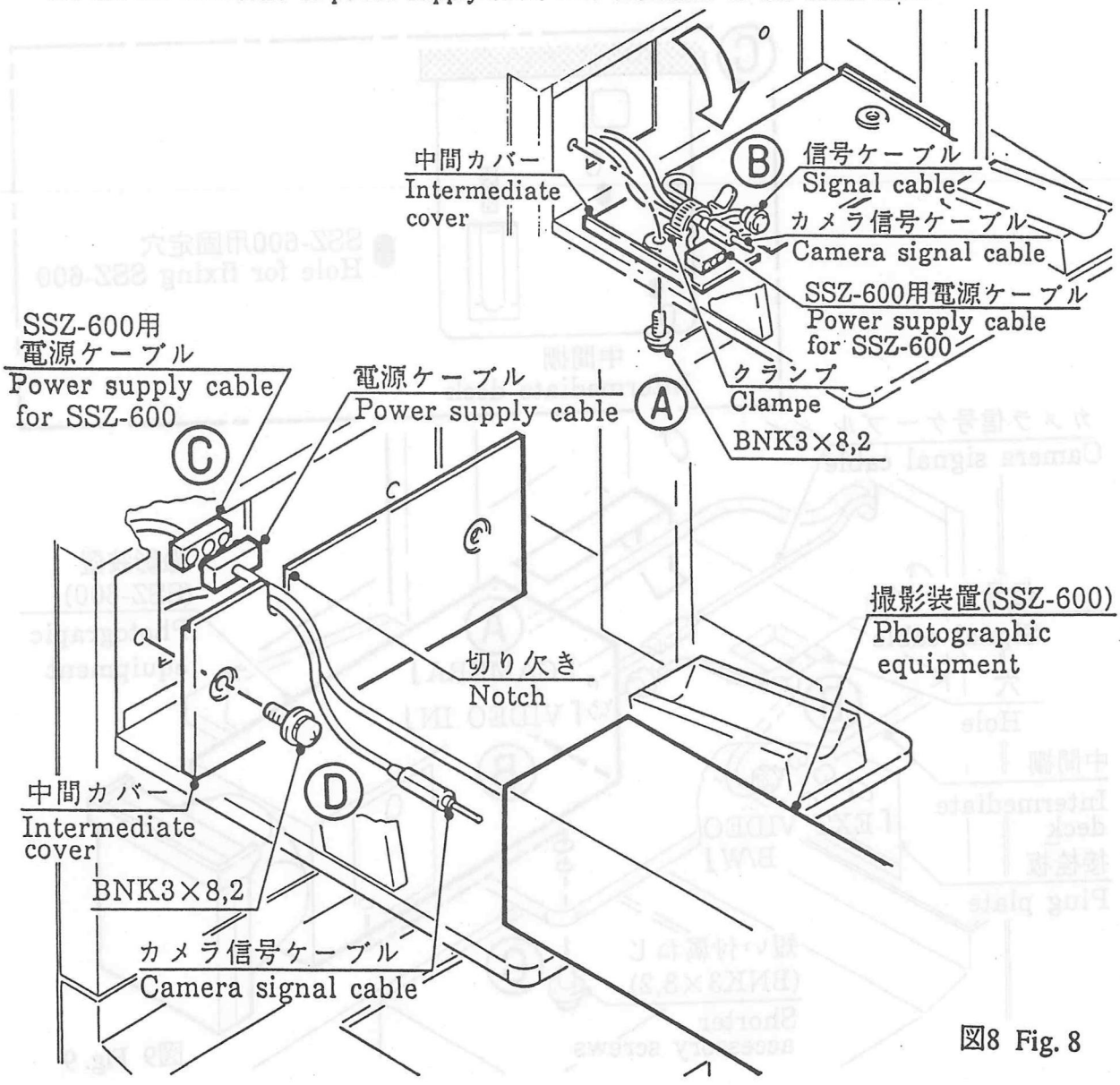


図8 Fig. 8

(5)カメラ信号ケーブルを、撮影装置背面の『CAMERA』に接続する。(図中Ⓐ)

(6)信号ケーブルの一方を、撮影装置背面の『VIDEO IN』に接続し、もう一方を、中間棚の穴を通し本体前面の接栓板『EXT VIDEO B/W』に接続する。(図中Ⓑ)

(7)撮影装置を、付属ねじの短い方(BNK3×8)2本で図の位置に据付け固定する。(図中Ⓒ)

注:付属ねじはプリンタ用(BNK3×16)、撮影装置用(BNK3×8)で長さが異なる。

(5)Connect the camera signal cable to『CAMERA』on the back side of photograpic equipment. (Ⓐ in Fig.)

(6)Connect the connector of signal cable to the『VIDEO IN』on the back side of photograpic equipment andother side through the hole intermediate deck and connect『EXT VIDEO B/W』to connection plug plate on the front face of the main unit. (Ⓑin Fig.)

(7)Fix the photograpic equipment in the figure with 2 shorter accessory screws (BNK3×8). (Ⓒin Fig.)

Note: Length of accessory screws for the printer (BNK3×16), and the photography unit (BNK3×8) differs from each other.

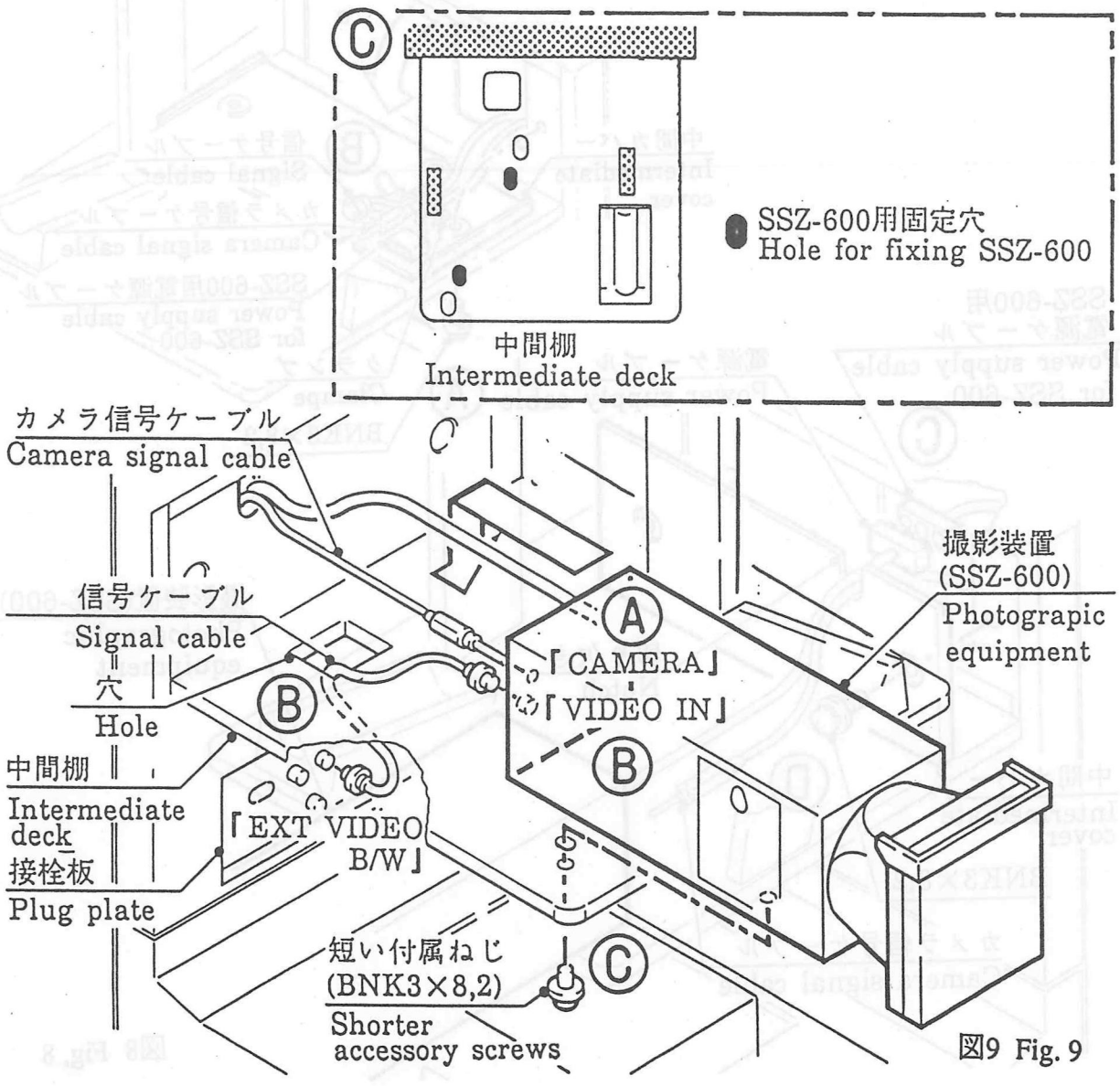


図9 Fig. 9

● プリンタ (SSZ-303) , カラー撮影装置 (SSZ-203), VTR (SVO-9500, AG-7300)

※VTR (SVO-9500)を中間棚に据付ける場合, プリンタ (SSZ-303), VTR (AG-7300)・・(2)の作業を行なうこと。
VTR (SVO-9500)を天板に据付ける場合,カラー撮影装置 (SSZ-203)・・・・・・(2)' の作業を行なうこと。

(1) アイソレーショントランス (PTU-004) のふたを、ねじ、ワッシャ各2個を外して取り外し、電源ケーブルを接続する。(図中 Ⓐ )
※ アイソレーショントランスが搭載されていない場合は、外部ACラインに接続する。

(2) ケーブルクランプ (UL-13) 3個を、本体の図の位置に取付け、電源ケーブルを固定する。(図中 Ⓑ )

(2)' ケーブルクランプ (UL-13) 1個を、本体の図の位置に取付け、電源ケーブルを固定する。(図中 Ⓒ )

● Printer (SSZ-303) , Color Photographic Equipment (SSZ-203), VTR (SVO-9500, AG-7300)

※ Printer (SSZ-303), In case of the installation of VTR on the intermediate deckVTR (SVO-9500), VTR (AG-7300)・・Step (2) required.
Color Photographic Equipment (SSZ-203), In case of the installation of VTR on the upper plate VTR (SVO-9500)・・Step (2)' required.

(1) Take out 2 screws and 2 washers and remove the lid of the isolation transformer (PTU-004) and connect the power supply cable. ( Ⓐ in Fig.)
※ When the isoration transformer is not mounted, connect it to the external AC line.

(2) Mount 3 cable clamps (UL-13) on the position of the body shown in the figure, and fix the power supply cable. ( Ⓑ in Fig.)

(2)' Mount 1 cable clamp (UL-13) on the position of the body shown in the figure, and fix the power supply cable. ( Ⓒ in Fig.)

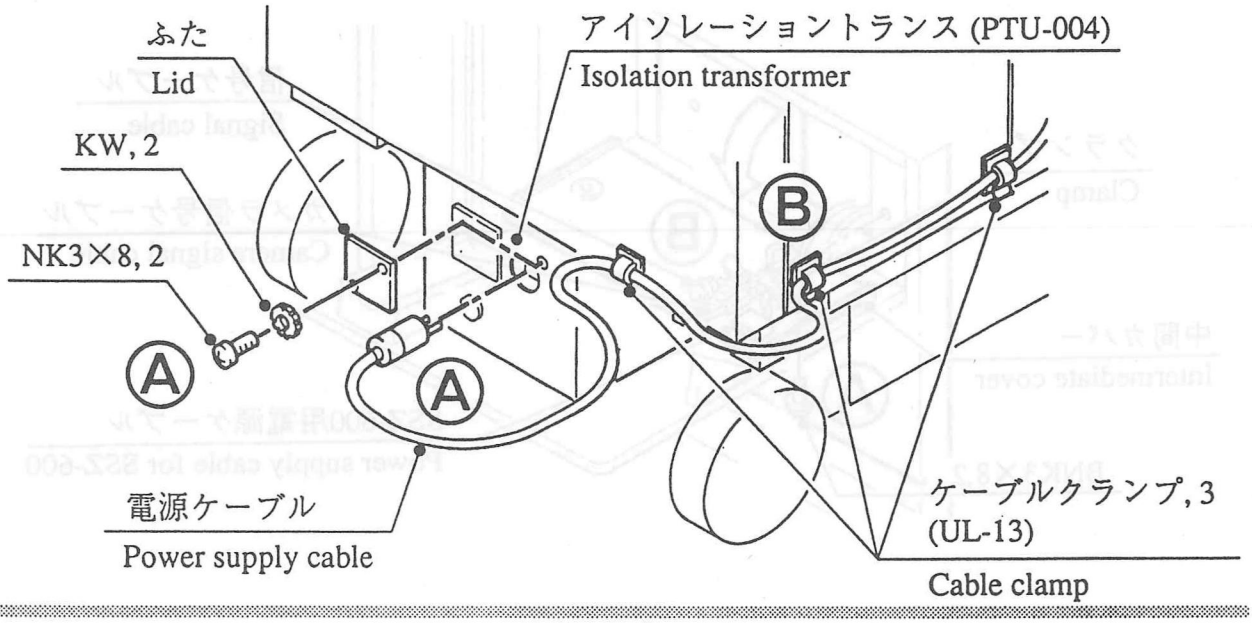


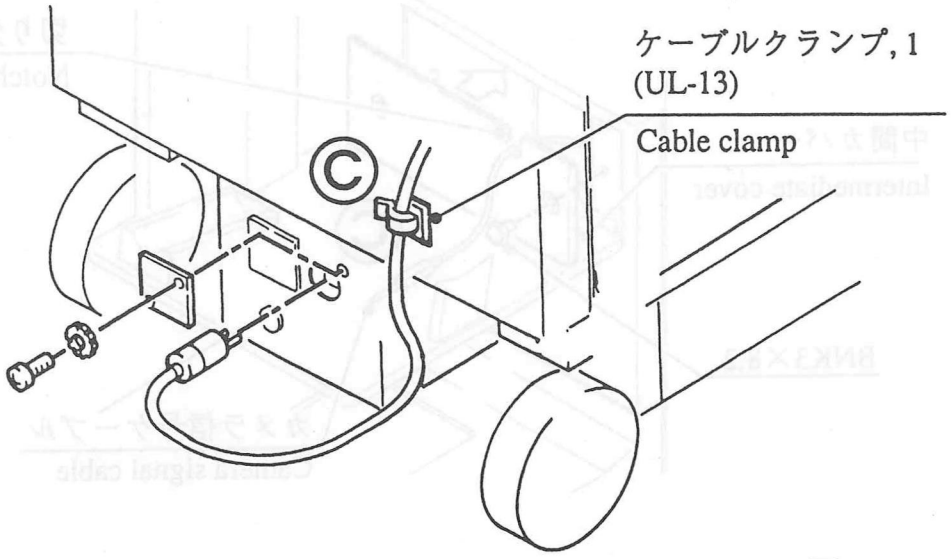


図10 Fig.10

○ プリンタ(SSZ-303)

(3) 中間カバーを、ねじ2本を外して取り外す。(図中 Ⓐ )

(4) 中間カバーの裏側に固定されているカメラ信号ケーブルと信号ケーブルを、クランプより外して取り外す。(図中 Ⓑ )

※SSZ-600用電源ケーブルはクランプに固定しておく。

(5) カメラ信号ケーブルを、中間カバーの切り欠きに通して、中間カバーを、(3)と逆の手順で取り付ける。(図中 Ⓒ )

○ Printer (SSZ-303)

(3) Remove the intermediate cover by removing the 2 screws. ( Ⓐ in Fig.)

(4) Take out the camera signal cable and the signal cable which are clamped onto the rear side of the intermediate cover. ( Ⓑ in Fig.)

※ Leave the power supply cable for SSZ-600 clamped as it is.

(5) Feed the camera signal cable through the notch along the edge of the intermediate cover and fix the intermediate cover using the reverse procedure of (3). ( Ⓒ in Fig.)

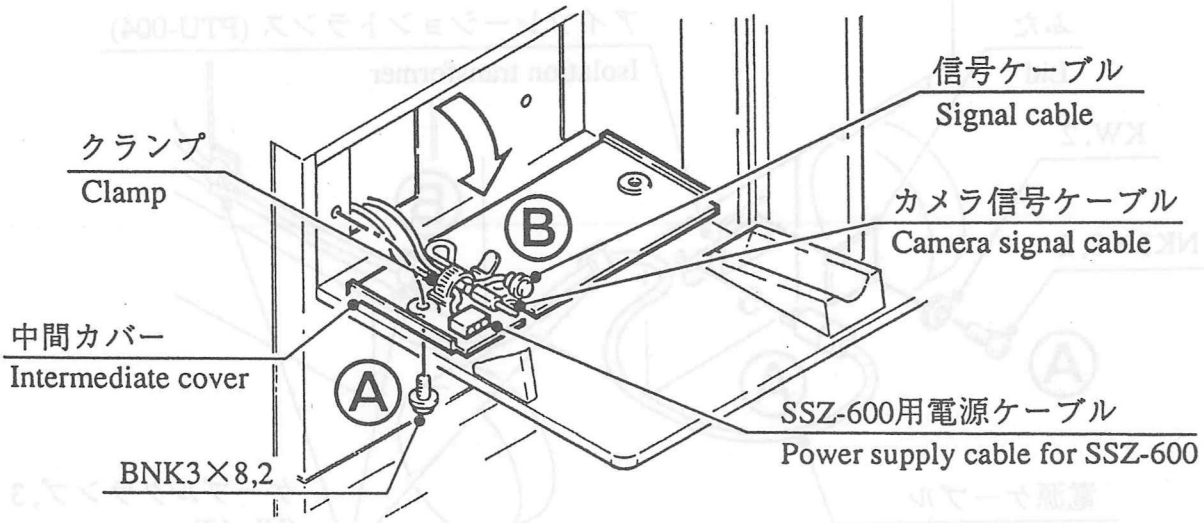


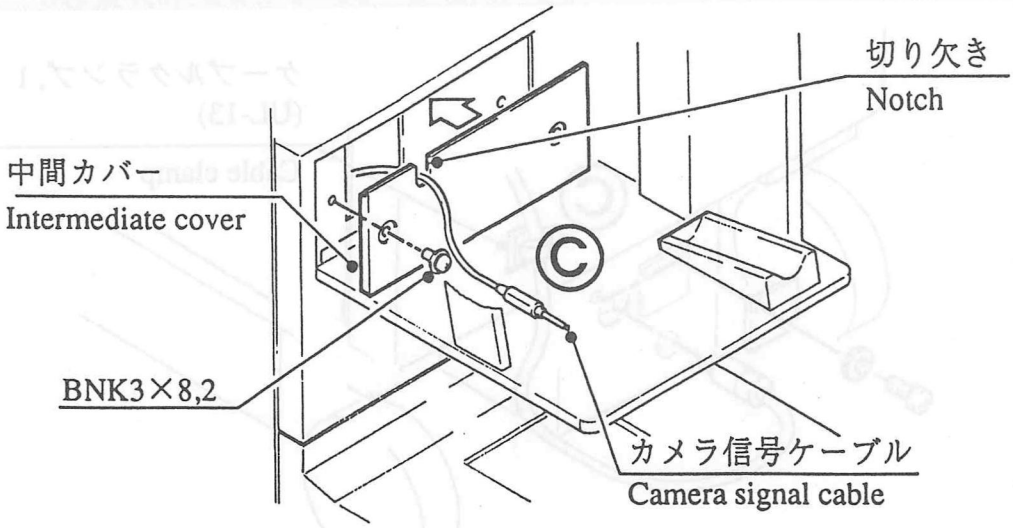


図11 Fig.11

(6) デュアルロックファスナー(目の荒い方)を、中間棚に、図の様に張り付ける。(図中Ⓐ)

(7) デュアルロックファスナー(目の細かい方)を、プリンタの底面の出っ張りに、図の様に張り付ける。(図中Ⓑ)

(8) カメラ信号ケーブルを、プリンタ背面の『REMOTE』に接続し、SSZ-303用電源ケーブルを、中間棚の穴を通し、『AC IN』に接続する。(図中Ⓒ)

(9) 信号ケーブルの一方を、プリンタ背面の『VIDEO IN』に接続し、もう一方を、中間棚の穴を通し本体前面の接栓板『EXT VIDEO B/W』に接続する。(図中Ⓓ)

(10) プリンタを、中間棚に乗せる。(図中Ⓔ)

(6) Glue dual lock fastener (Rougher one) on the intermediate deck as shown in the figure in alignment. (Ⓐ in Fig.)

(7) Gule dual lock fastener (Finer one) on the extruded square on printer as shown in the figure. ( Ⓑ in Fig.)

(8) Connect the camera signal cable with the 『REMOTE』 of the back side of the printer and power suplly cable for SSZ-303 through the hole of the intermediate deck and connect with 『AC IN』.( Ⓒ in Fig.)

(9) Connect the connector of signal cable to the 『VIDEO IN』 on the back side of printer and other side through the hole of the intermediate deck and connect 『EXT VIDEO B/W』 to connection plug plate on the front face of the main unit. ( Ⓓ in Fig.)

(10) Place printer on the intermediate deck. ( Ⓔ in Fig.)

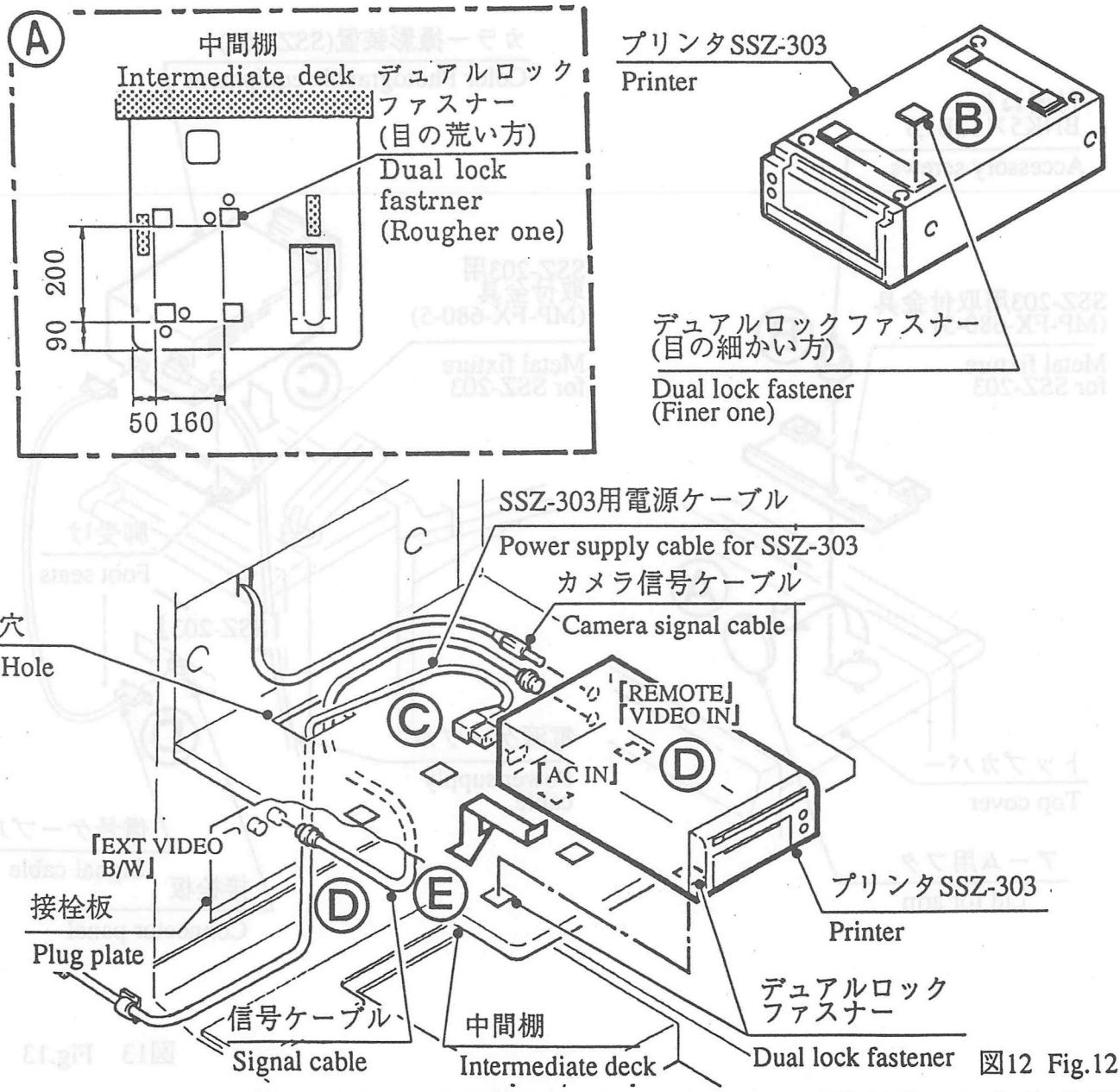


図12 Fig.12

○カラー撮影装置 (SSZ-203)

(3) アーム用フタを、トップカバーから取り外す。(図中Ⓐ)

(4) SSZ-203用取付金具 (MP-FX-680-5)を、付属ねじ3本で取り付ける。(図中Ⓑ)

(5) SSZ-203を、取付金具の脚受に乗せる。(図中Ⓒ)

(6) 信号ケーブルを、SSZ-203背面の『SIGNAL』と本体背面接栓板『SSZ-203』に接続する。(図中Ⓓ)

○ Color Photographic equipment (SSZ-203)

(3) Remove the lid for arm from top cover.(Ⓐ in Fig.)

(4) Mount the metal fixture (MP-FX-680-5) for SSZ-203 using the 3 accessory screws.(Ⓑ in Fig.)

(5) Place the SSZ-203 on the metal fixture by fitting the foot in the foot seats. (Ⓒ in Fig.)

(6) Connect one end of the signal cable with 『SIGNAL』 terminal on the back of SSZ-203 and another end with the connector panel 『SSZ-203』 on the back of the main unit. (Ⓓ in Fig.)

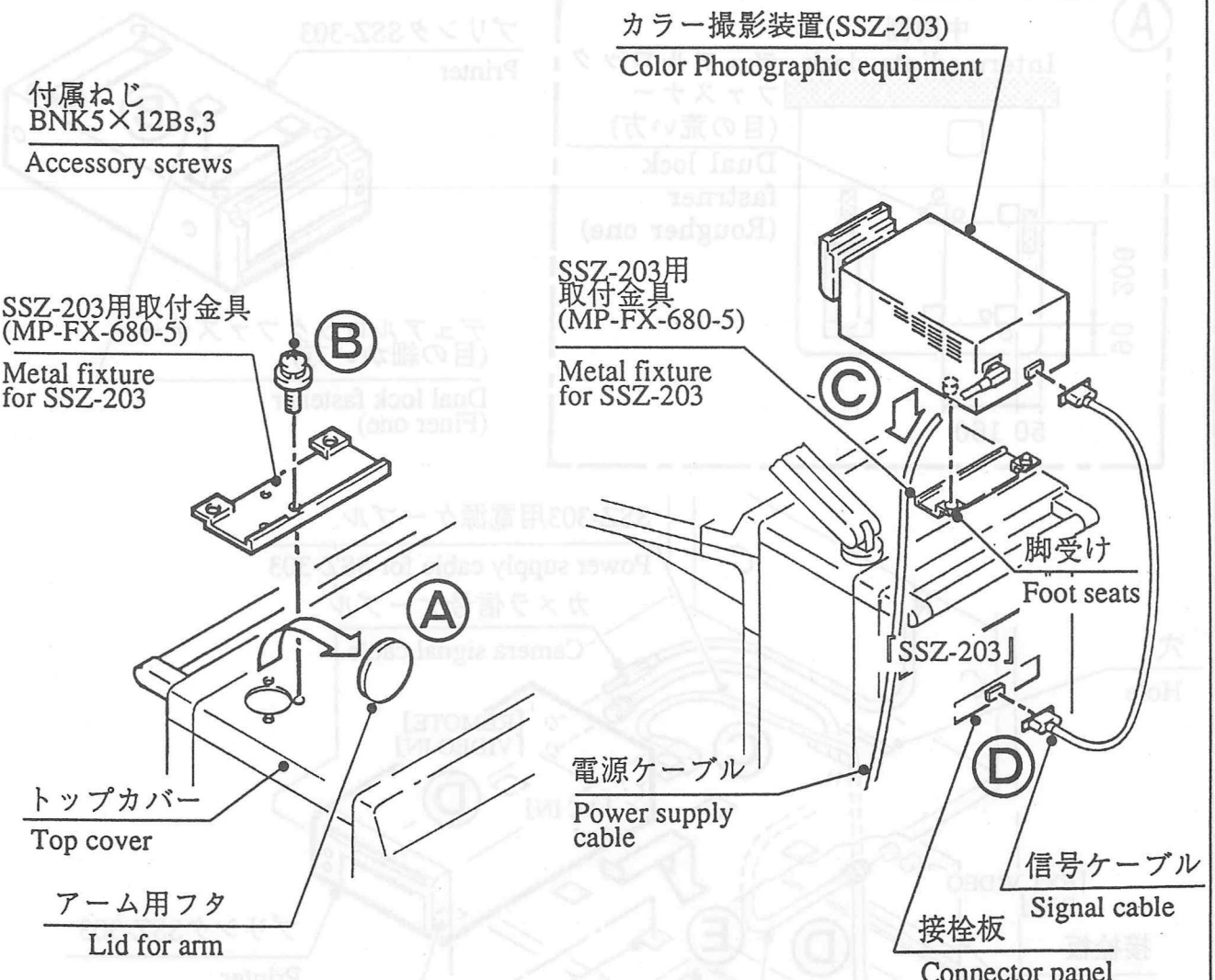


図13 Fig.13

○ VTR (SVO-9500)

1. 中間棚に据付の場合

(3) 信号ケーブル2本、電源ケーブルを中間棚の穴に通し (図中 Ⓐ)、
電源ケーブル、信号ケーブル2本を、VTR背面のコネクタにそれぞれ接続する。(図中 Ⓑ)

(4) 信号ケーブル2本を接栓板にそれぞれ接続する。(図中 Ⓒ)

(5) VTRを中間棚にのせる。(図中 Ⓓ)

○ VTR (SVO-9500)

1. In case of the installation on the intermediate deck

(3) Feed the 2 signal cables, power supply cable through the hole of the intermediate deck (Ⓐ in Fig.), connect the power supply cable and 2 signal cables to the connector on the back side of the VTR respectively. (Ⓑ in Fig.)

(4) Connect the 2 signal cables to the plug plate. (Ⓒ in Fig.)

(5) Put the VTR on the intermediate deck. ( Ⓓ in Fig.)

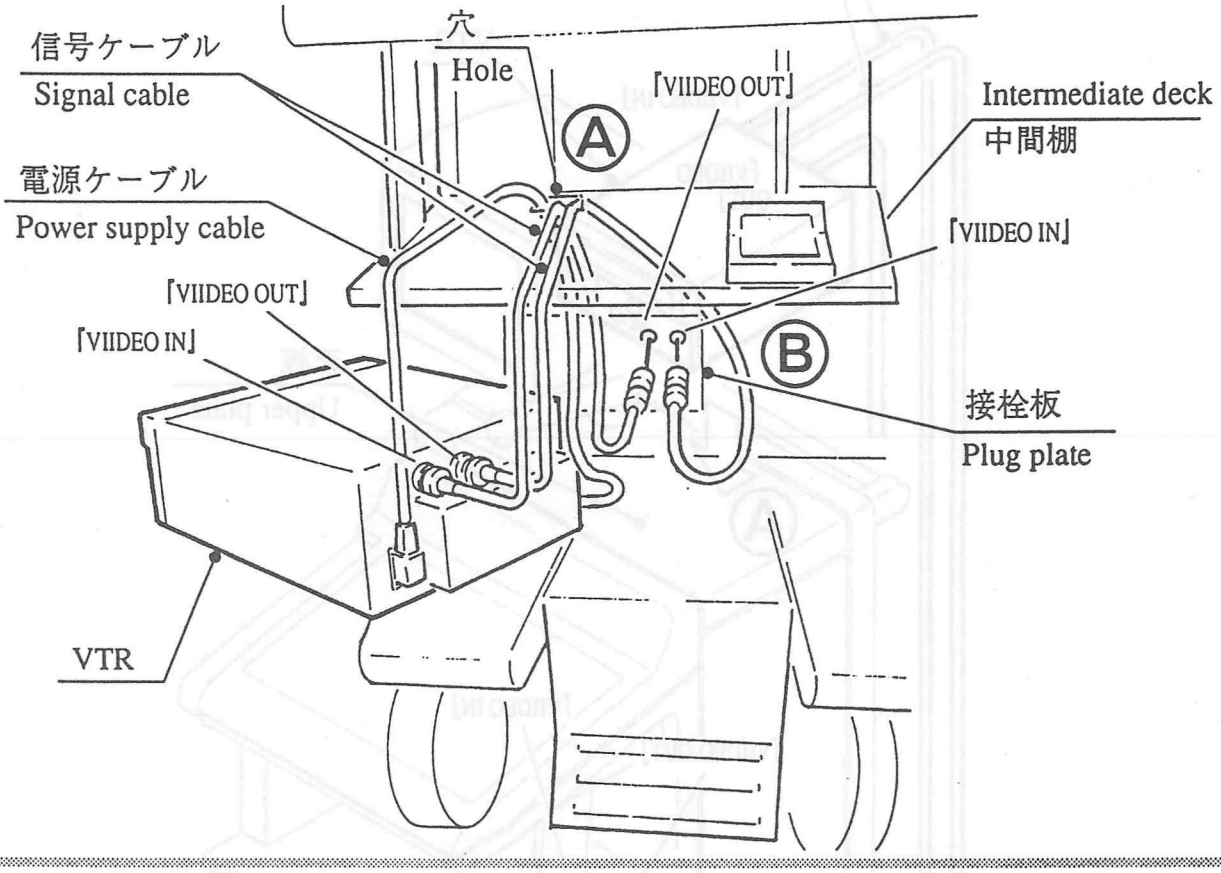


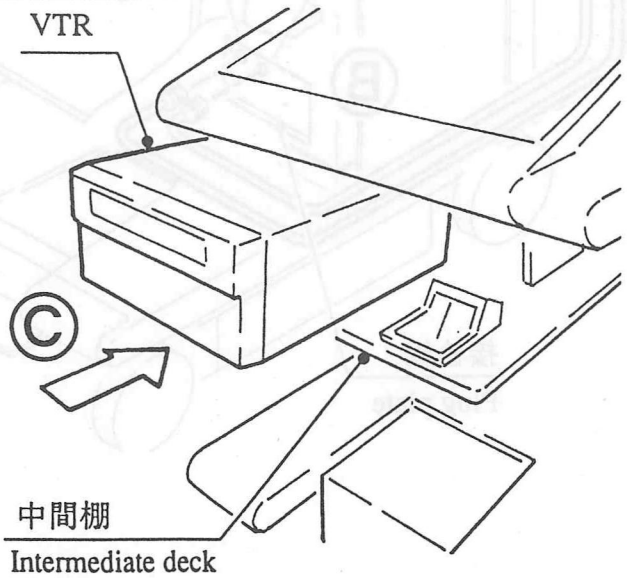


図14 Fig. 14

2. 天板上に据付の場合
(3) VTRを天板上にのせる。(図中 Ⓐ )
(4) 信号ケーブル2本を接栓板に接続する。(図中 Ⓑ )

2. In case of the installation on the upper plate
(3) Put the VTR on the upper plate. (Ⓐ in Fig.)
(4) Connect the 2 signal cables to the plug plate. (Ⓑ in Fig.)

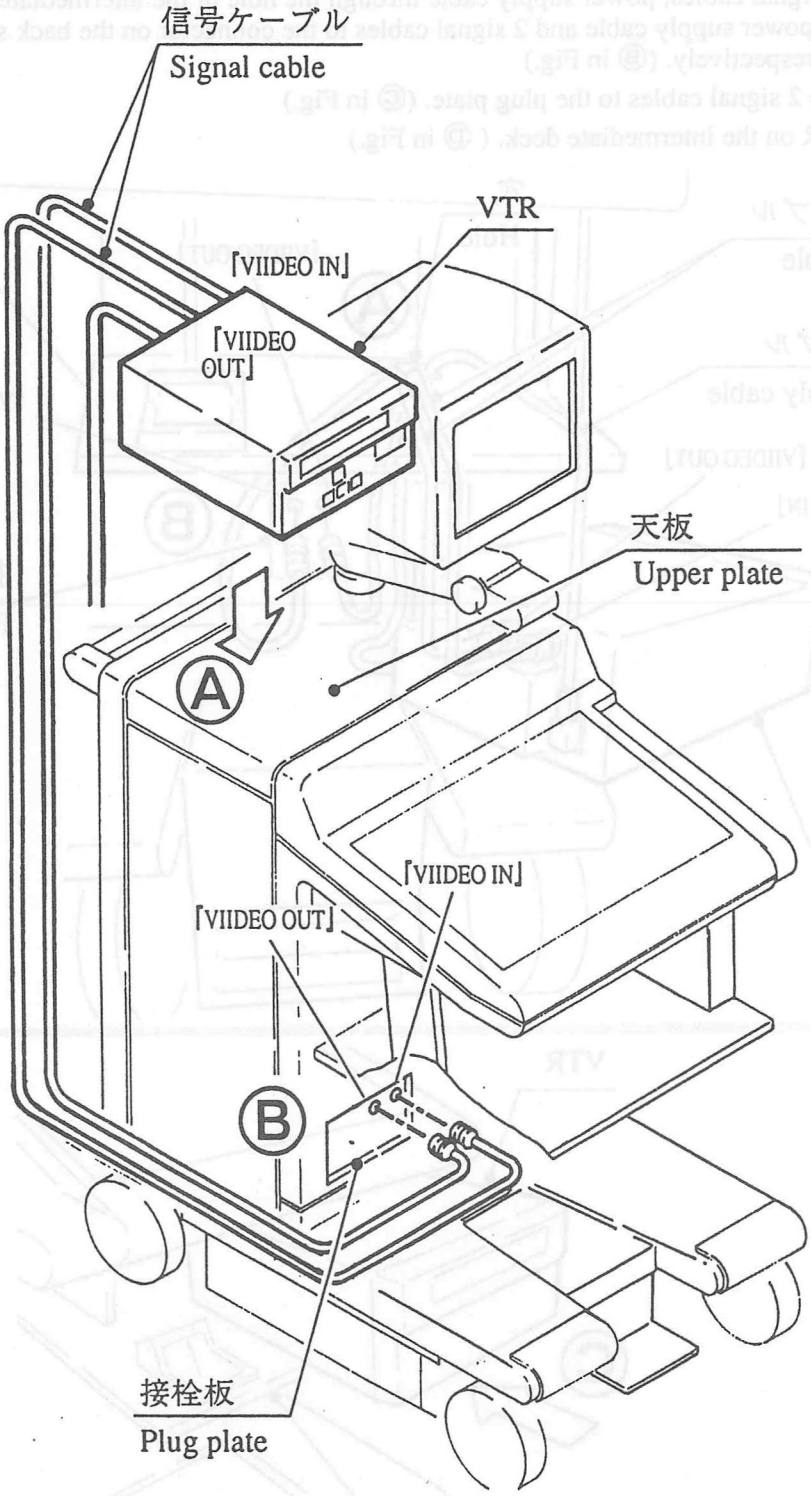


図15 Fig. 15

○ VTR(AG-7300)

(3) VTRの脚を、ベースカバーの脚受に合わせて載せる。(図中Ⓐ)

(4) 信号ケーブルの2本の一方を、VTR背面の『VIDEO IN』と『VIDEO OUT』に接続し(図中Ⓑ)、
もう一方を、本体前面にある接栓板の『VIDEO OUT』と『VIDEO IN』に
それぞれ接続する。(図中Ⓒ)

○ VTR(AG-7300)

(3) Place the VTR on the base cover by fitting the foot in the foot seats. ( Ⓐ in Fig.)

(4) Connect one end of the 2 signal cables with the 『VIDEO IN』 and 『VIDEO OUT』
terminals on the back of VTR unit ( Ⓑ in fig.), and another end of them with
the 『VIDEO OUT』 and 『VIDEO IN』 terminals on the Plug plate respectively. ( Ⓒ in fig.)

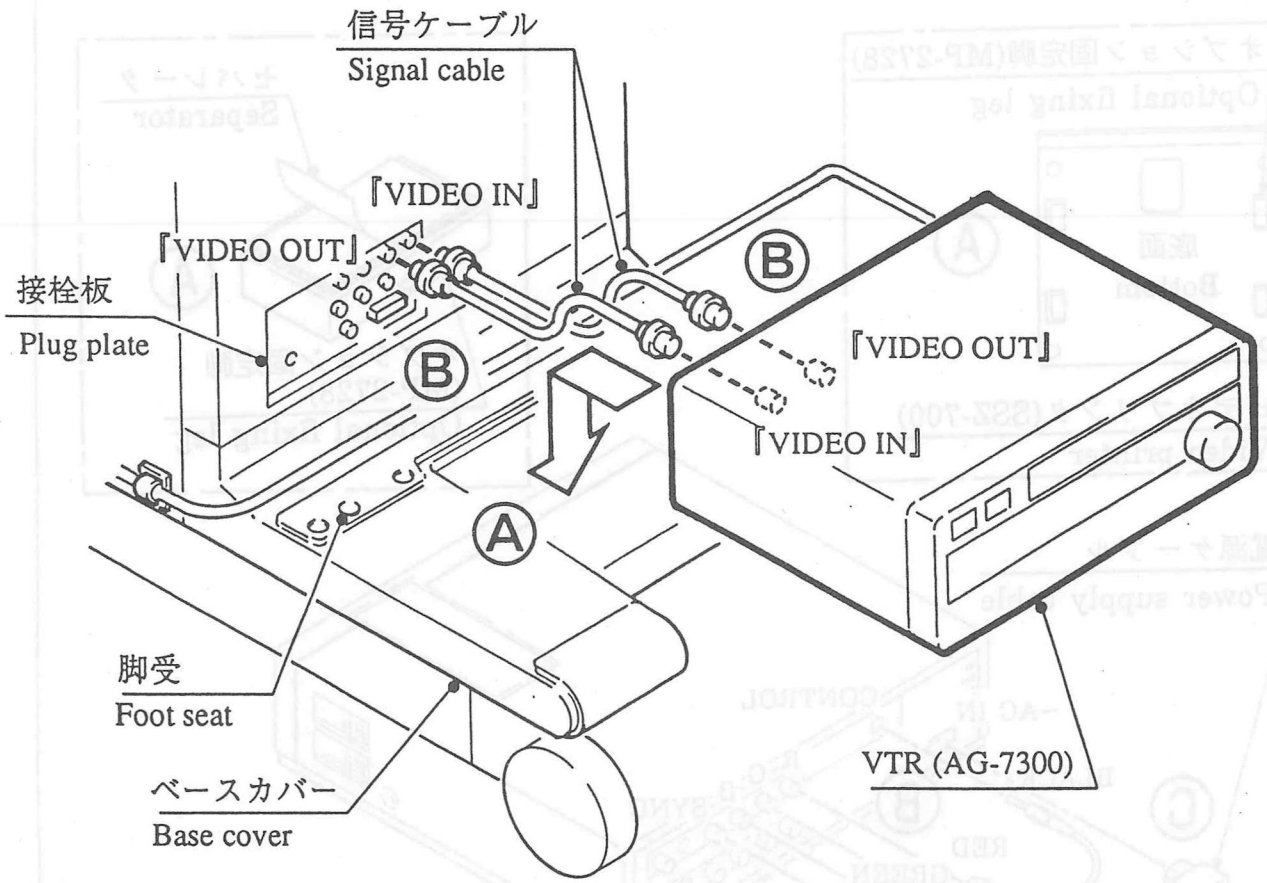


図16 Fig. 16

●ビデオプリンタ(SSZ-700)

(1)オプション固定脚(MP-2728)4個を、セパレータをはがし、ビデオプリンタ底面の図の位置に固定する。(図中Ⓐ)
注:オプション固定脚は、▽印が下側になる。

(2)信号ケーブルのコネクタ『RED』『GREEN』『BLUE』『WHITE』及び、『BLACK』を、ビデオプリンタ背面の『R』『G』『B』『SYNC』及び、『CONTROL』にそれぞれ接続する。(図中Ⓑ)

(3)電源ケーブルを、ビデオプリンタ背面の『~AC IN』に接続する。(図中Ⓒ)

(4)ケーブルクランプ(UL-13)を、ビデオプリンタ背面の図の位置に取付け、信号ケーブルを、固定する。(図中Ⓓ)

●Video printer (SSZ-700)

(1)Peel the separator and anchor the optional fixing leg (MP-2728) to the position of the bottom of the video printer shown in the figure. (Ⓐin Fig.)
NOTE: The optional fixing leg is placed so that the portion with ▽mark becomes downward.

(2)Connect the connectors『RED』『GREEN』『BLUE』『WHITE』and『BLACK』of the signal cable to the connectors『R』『G』『B』『SYNC』and『CONTROL』on the rear side of the video printer resectivery. (Ⓑ in Fig.)

(3)Connect the power supply cable to『~AC IN』on the rear side of the video printer. (Ⓒin Fig.)

(4)Mount the cable clamp (UL-13) on the position of the rear side of the video printer shown in the figure ,and fix the signal cable. (Ⓓin Fig.)

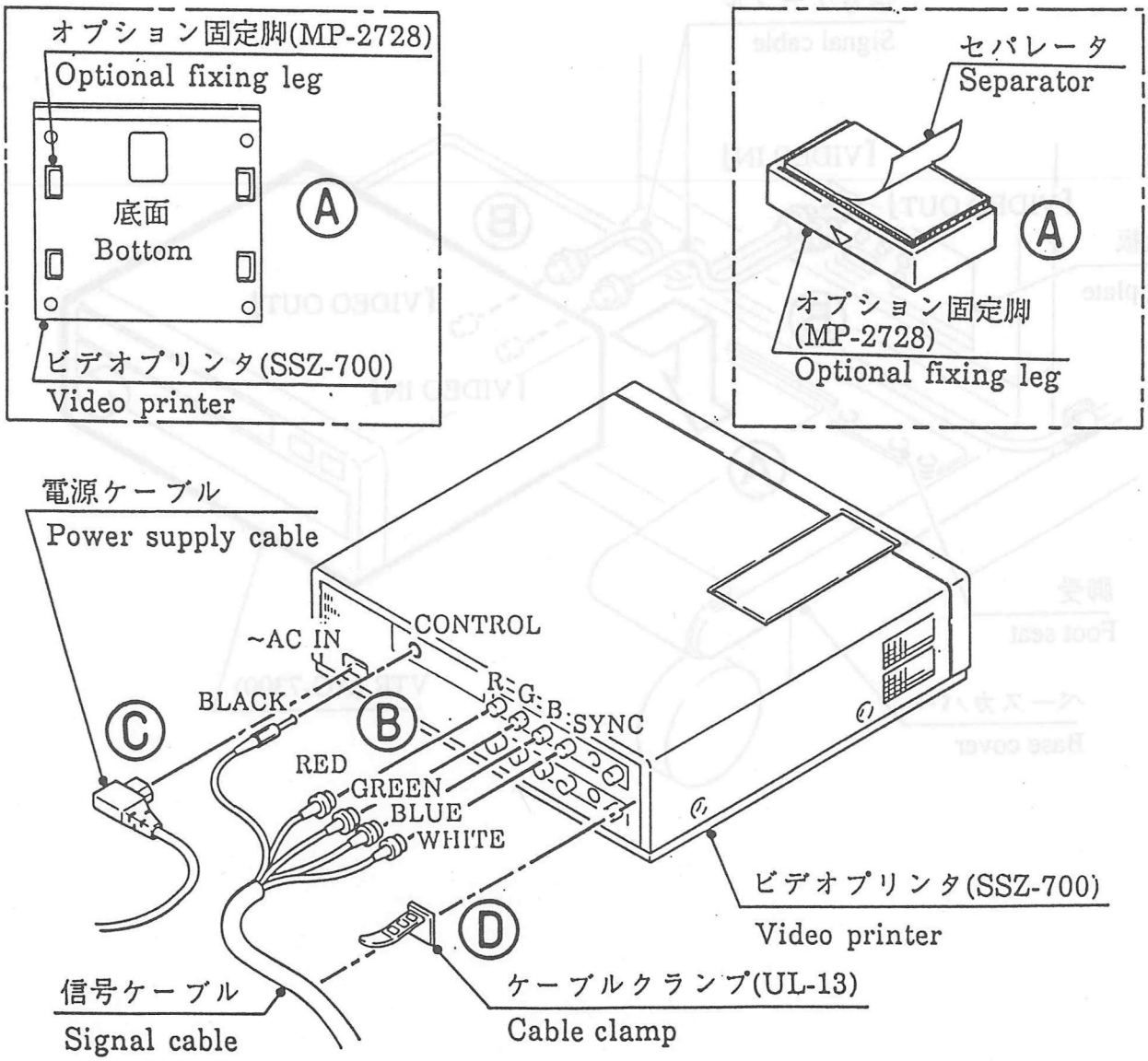


図17 Fig. 17

○天板上に据付の場合

(5)オプション固定脚のセパレータを、はがし、ビデオプリンタを、本体天板上に固定する。(図中Ⓐ)

(6)信号ケーブルを、本体前面の接栓板『RGB OUT』に接続する。(図中Ⓑ)

(7)アイソレーショントランス(PTU-004)のフタを、ねじ、ワッシャ各2個を、外して取り外し、電源ケーブルを、接続する。(図中Ⓒ)

※アイソレーショントランスが搭載されていない場合は、外部ACラインに接続する。

(8)ケーブルクランプ(UL-13)3個を、本体の図の位置に取付け、信号ケーブルと電源ケーブルを、固定する。(図中Ⓓ)

○In case of installation on the upper plate

(5)Peel the separator of the optional fixing leg, and fix the video printer on the upper plate of the body. (Ⓐ in Fig.)

(6)Connect the signal cable to『RGB OUT』of the plug plate on the front of the body. (Ⓑ in Fig.)

(7)Take out 2 screws and 2 washers and remove the lid of the isolation transformer (PTU-004) and connect the power supply cable. (Ⓒ in Fig.)

※When the isolation transformer is not mounted, connect it to the external AC line.

(8)Mount 3 cable clamps (UL-13) on the position of the body shown in the figure, and fix the signal cable and the power supply cable. (Ⓓ in Fig.)

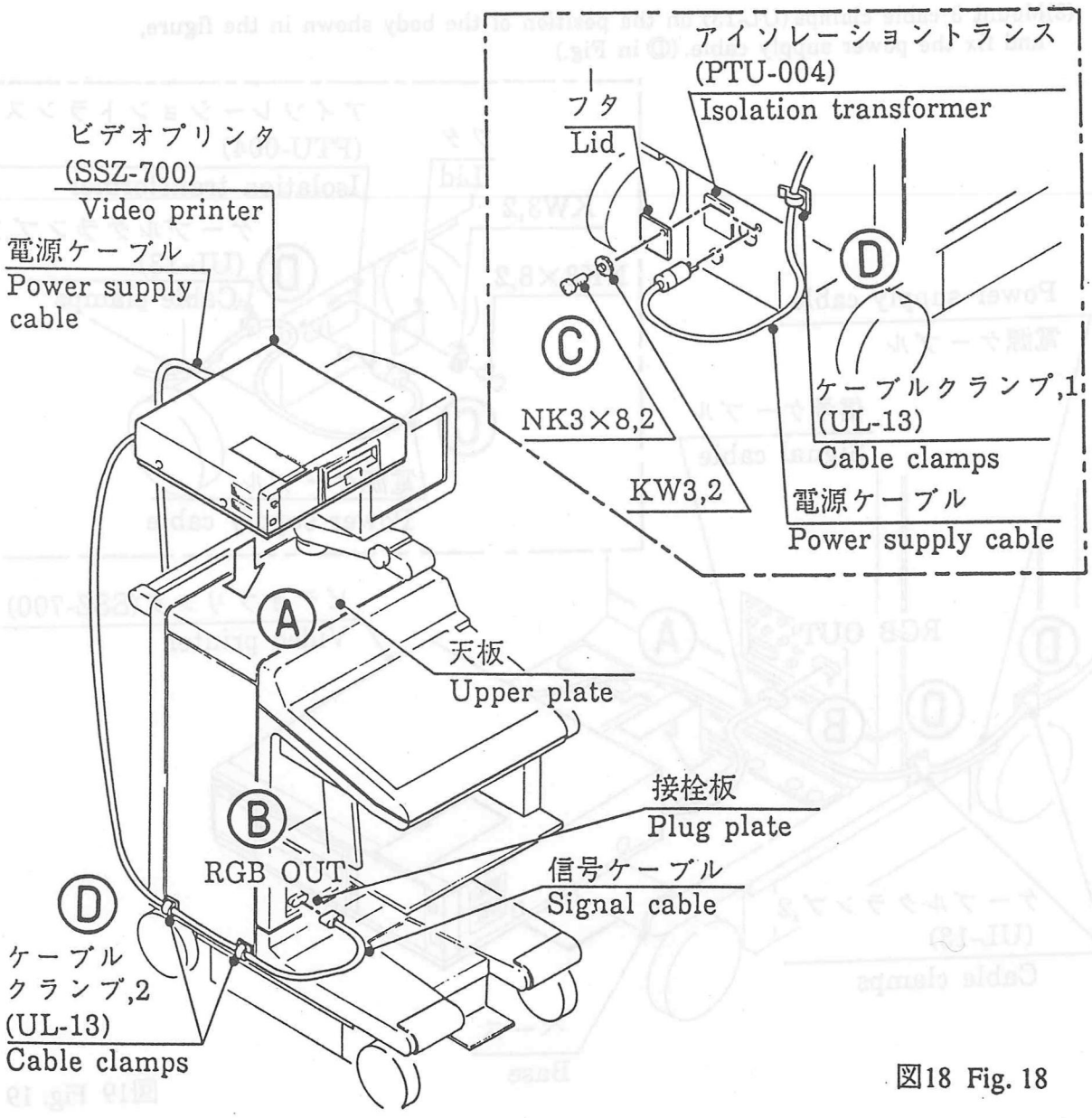


図18 Fig. 18

○ベース上に据付の場合

(5)オプション固定脚のセパレータを、はがし、ビデオプリンタを、本体ベース上に固定する。(図中Ⓐ)

(6)信号ケーブルを、本体前面の接栓板『RGB OUT』に接続する。(図中Ⓑ)

(7)アイソレーショントランス(PTU-004)のフタを、ねじ、ワッシャ各2個を外して取り外し、電源ケーブルを、接続する。(図中Ⓒ)
※アイソレーショントランスが搭載されていない場合は、外部ACラインに接続する。

(8)ケーブルクランプ(UL-13)3個を、本体の図の位置に取付け、電源ケーブルを、固定する。(図中Ⓓ)

○In case of installation on the base

(5)Peel the separator of the optional fixing leg, and fix the video printer on the base of the body. (Ⓐ in Fig.)

(6)Connect the signal cable to『RGB OUT』of the plug plate on the front of the body. (Ⓑ in Fig.)

(7)Take out 2 screws and 2 washers and remove the lid of the isolation transformer (PTU-004) and connect the power supply cable. (Ⓒ in Fig.)
※When the isolation transformer is not mounted, connect it to the external AC line.

(8)Mount 3 cable clamps (UL-13) on the position of the body shown in the figure, and fix the power supply cable. (Ⓓ in Fig.)

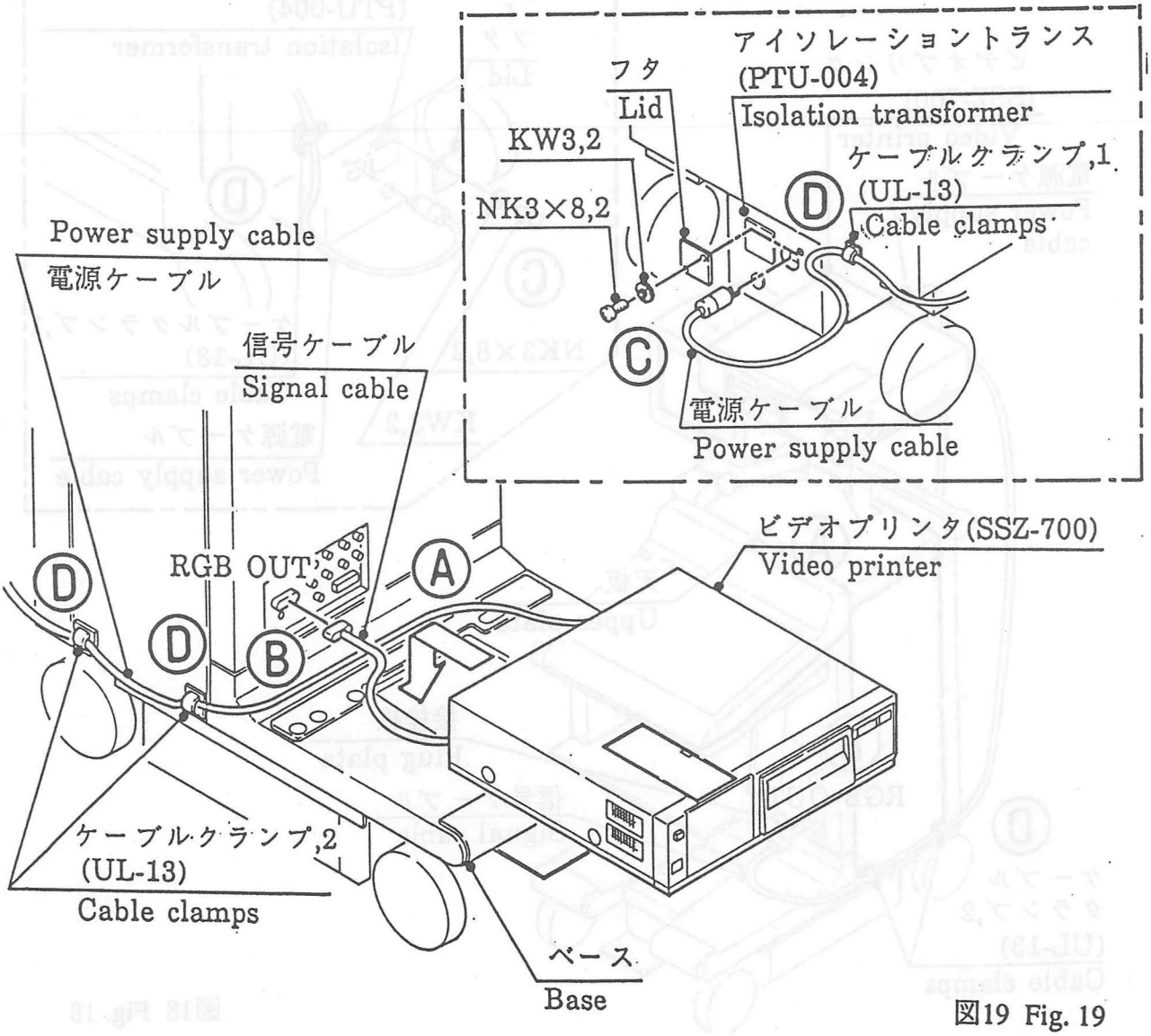


図19 Fig. 19

○VTR (AG-7300)上に据付の場合

(5)オプション固定脚のセパレータを、はがし、ビデオプリンタを、VTRの上に固定する。(図中Ⓐ)

(6)信号ケーブルを、本体前面の接栓板『RGB OUT』に接続する。(図中Ⓑ)

○In case of installation on the VTR (AG-7300)

(5)Peel the separator of the optional fixing leg, and fix the video printer on the VTR of the body. (Ⓐ in Fig.)

(6)Connect the signal cable to『RGB OUT』of the plug plate on the front of the body. (Ⓑ in Fig.)

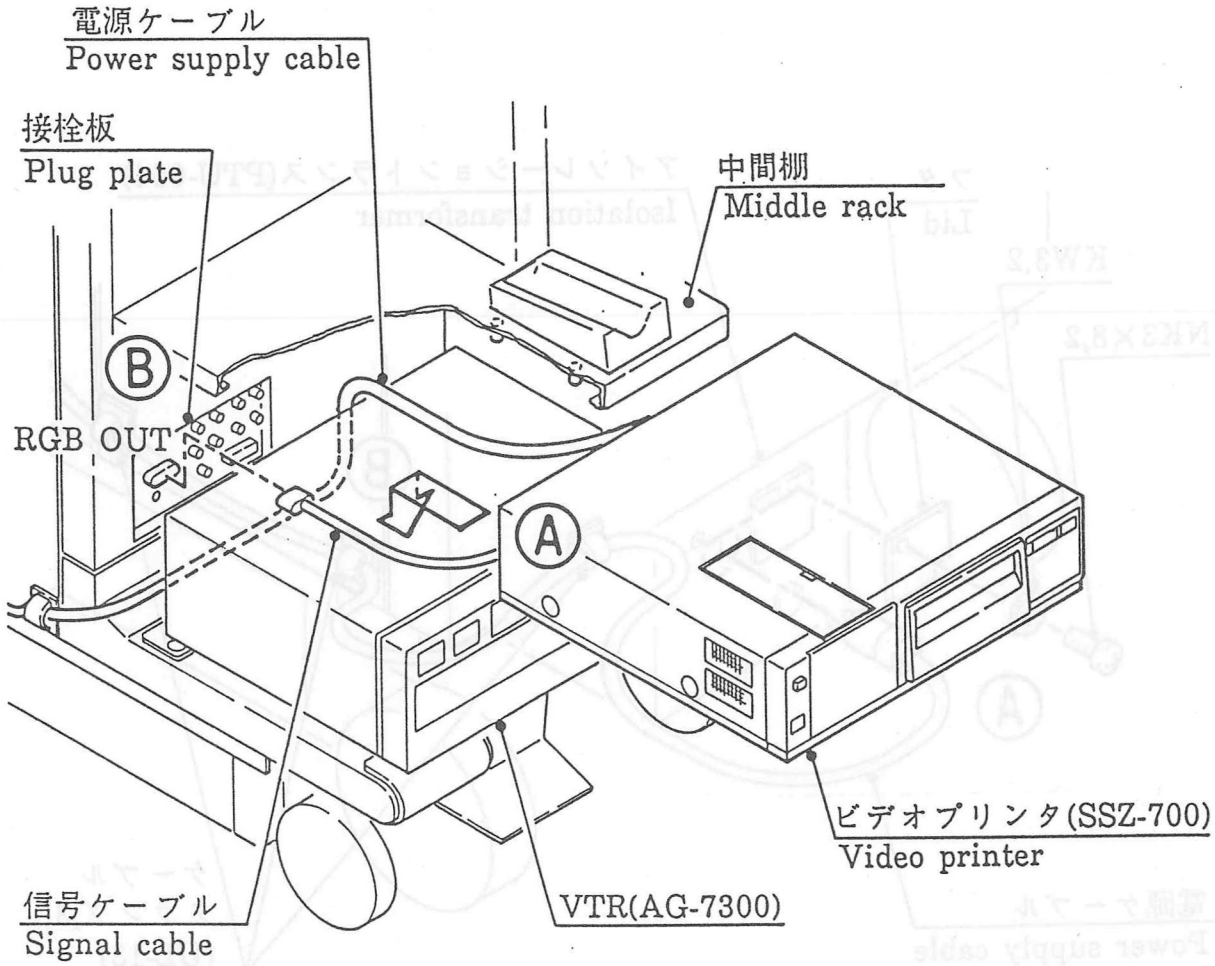


図20 Fig. 20

(7)アイソレーショントランス(PTU-004)のフタを、ねじ、ワッシャ各2個を外して取り外し、
電源ケーブルを、接続する。(図中Ⓐ)
※アイソレーショントランスが搭載されていない場合は、外部ACラインに接続する。

(8)ケーブルクランプ(UL-13)3個を、本体の図の位置に取付け、電源ケーブルを、
固定する。(図中Ⓑ)

(7)Take out 2 screws and 2 washers and remove the lid of the isolation transformer (PTU-004)
and connect the power supply cable. (Ⓐ in Fig.)
※When the isolation transformer is not mounted, connect it to the external AC line.

(8)Mount 3 cable clamps (UL-13) on the position of the body shown in the figure,
and fix the power supply cable. (Ⓑ in Fig.)

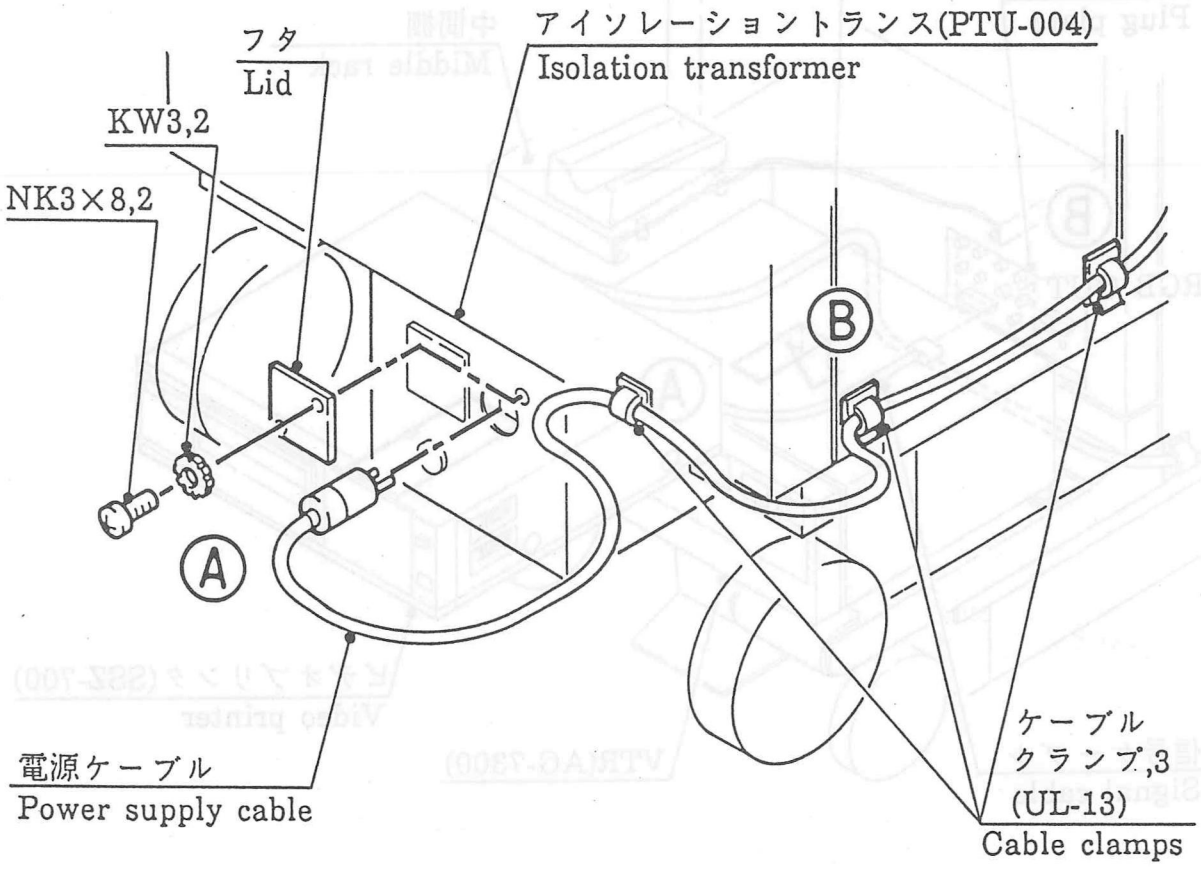


図21 Fig. 21

Aloka

# SSD-680STD据付要領書
# INSTALLATION PROCEDURES

必要な工具：M4プラスドライバー (組立先で用意すること), M4六角レンチ (付属品)

注意: 危険防止のため、モニタを据え付け終わるまでノブを緩めないこと。
(バネが強く、いきなりモニタアームがはねあがるため。)

1. モニタの据付方法
   (1) ロックピンを、上に引き上げ、モニタアームを、本体に対し90°の位置にする。(図中Ⓐ)
   (2) モニタアームから出ているコネクタをモニタに押し込み、モニタをねじ2本で取付ける。(図中Ⓑ)
   (3) モニタ後カバーをねじ4本を外して取り外す。(図中Ⓒ)
   (4) モニタ内部のコネクタにモニタアームのコネクタを接続する。(図中Ⓓ)
   (5) モニタ後カバーを取付ける。

Tool required : M4 philips head screwdriver (To be arranged by assembly plant.), M4 hexagonal wrench (Accessory)

Note: For safety, do not loosen the knob until you will have completely installed the monitor.
( The monitor arm will be jumped up suddenly due to its strong spring. )

1. Installing monitor
   (1) Pull up the lock pin and place the monitor arm at 90° to the body member. ( Ⓐ in Fig.)
   (2) Push the connector, extending from the monitor arm, into the monitor, and fix the monitor in place with 2 screws.( Ⓑ in Fig.)
   (3) Remove the monitor rear cover after removing 4 screws. ( Ⓑ in Fig.)
   (4) Connect the monitor arm connector to the connector inside the monitor. ( Ⓓ in Fig.)
   (5) Install the monitor rear cover.

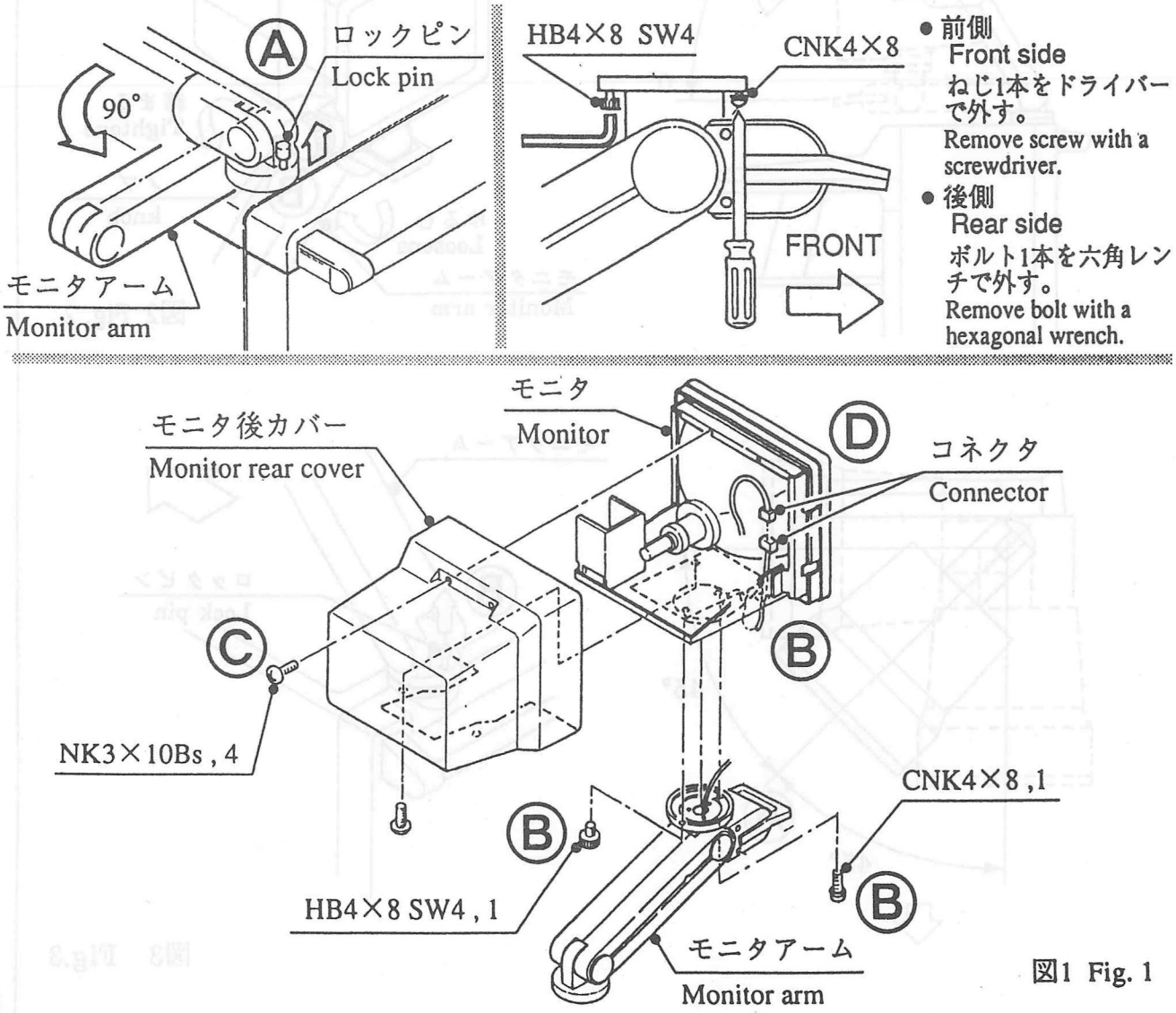


図1 Fig. 1

2.モニタアームの動作方法

(1)モニタアームの上下の可動範囲は、0°~60°の範囲。(図2Ⓐ)

(2)モニタの上下移動はノブをゆるめて行い、適正位置でノブを締めて固定する。(図2Ⓑ)

(3)モニタアームの左右の可動範囲は、左に45°右に45°の範囲。(図3Ⓐ)

(4)モニタの左右移動は、モニタアームのロックピンを上に引き上げて行う。(図3Ⓑ)

2.Monitor arm maneuvering procedure

(1)The monitor arm swings vertically over a 0° to 60° range. (Ⓐ in Fig. 2)

(2)To shift the monitor vertically, first loosen the arm knob, and after duly positioning the monitor, tighten the knob to fasten the monitor down. (Ⓑ in Fig. 2)

(3)The monitor arm swings horizontally over a range from 45° to the right to 45° to the left. (Ⓐ in Fig. 3)

(4)To reorient the monitor horizontally, first lift the monitor arm lock pin. (Ⓑ in Fig. 3)

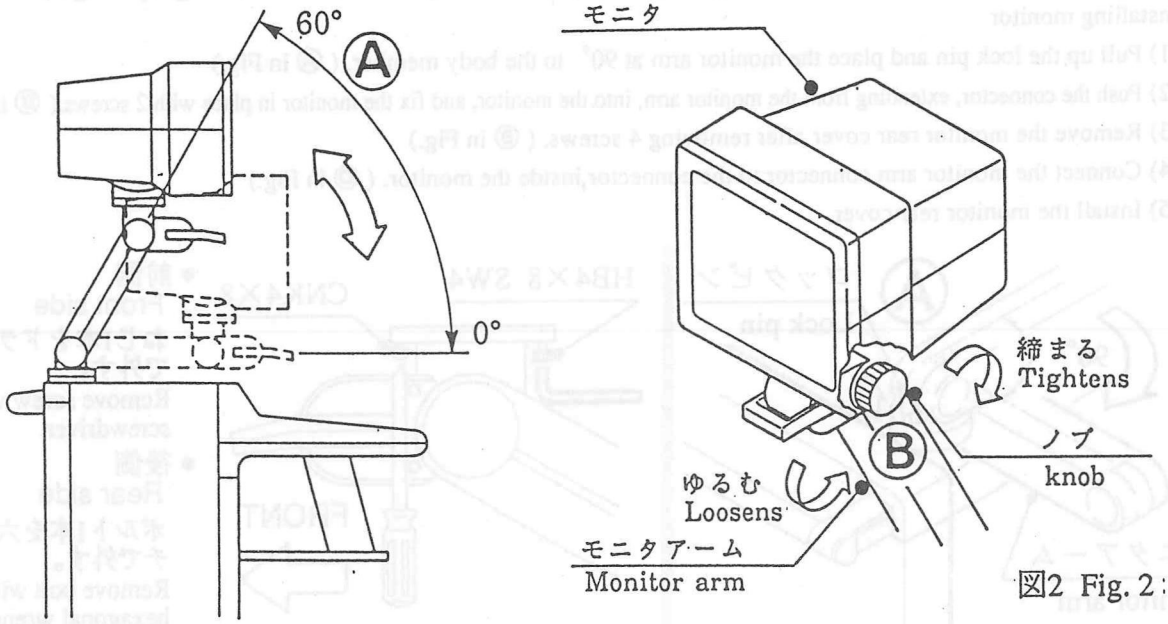


図2 Fig. 2

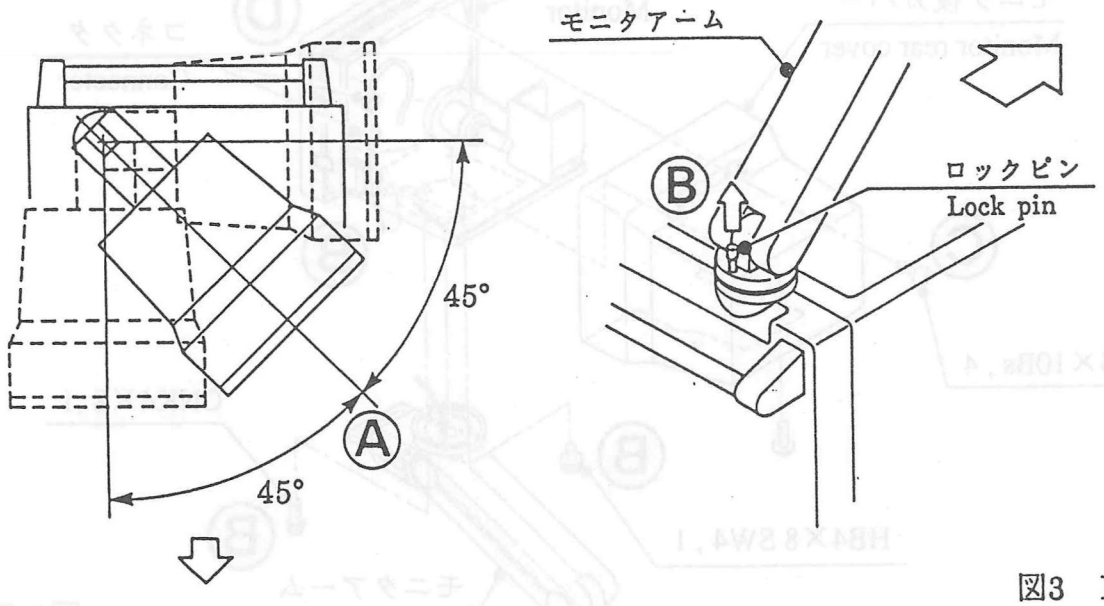


図3 Fig.3

3. プローブ、及び、ケーブルハンガの取付方法
(1) ケーブルハンガを、本体に差し込む。(図中 Ⓐ )
(2) コネクタを接続し、プローブをプローブホルダへ入れる。( 図中 Ⓑ )
(3) ゼリーボトルを、ゼリーホルダに置く。( 図中 Ⓒ )

3. Probe and cable hanger mounting procedure
(1) Insert the cable hanger in the main unit. ( Ⓐ in Fig. )
(2) Mate the connector, stow probe holder. ( Ⓑ in Fig. )
(3) Position a gel bottle on the gel holder. ( Ⓒ in Fig. )

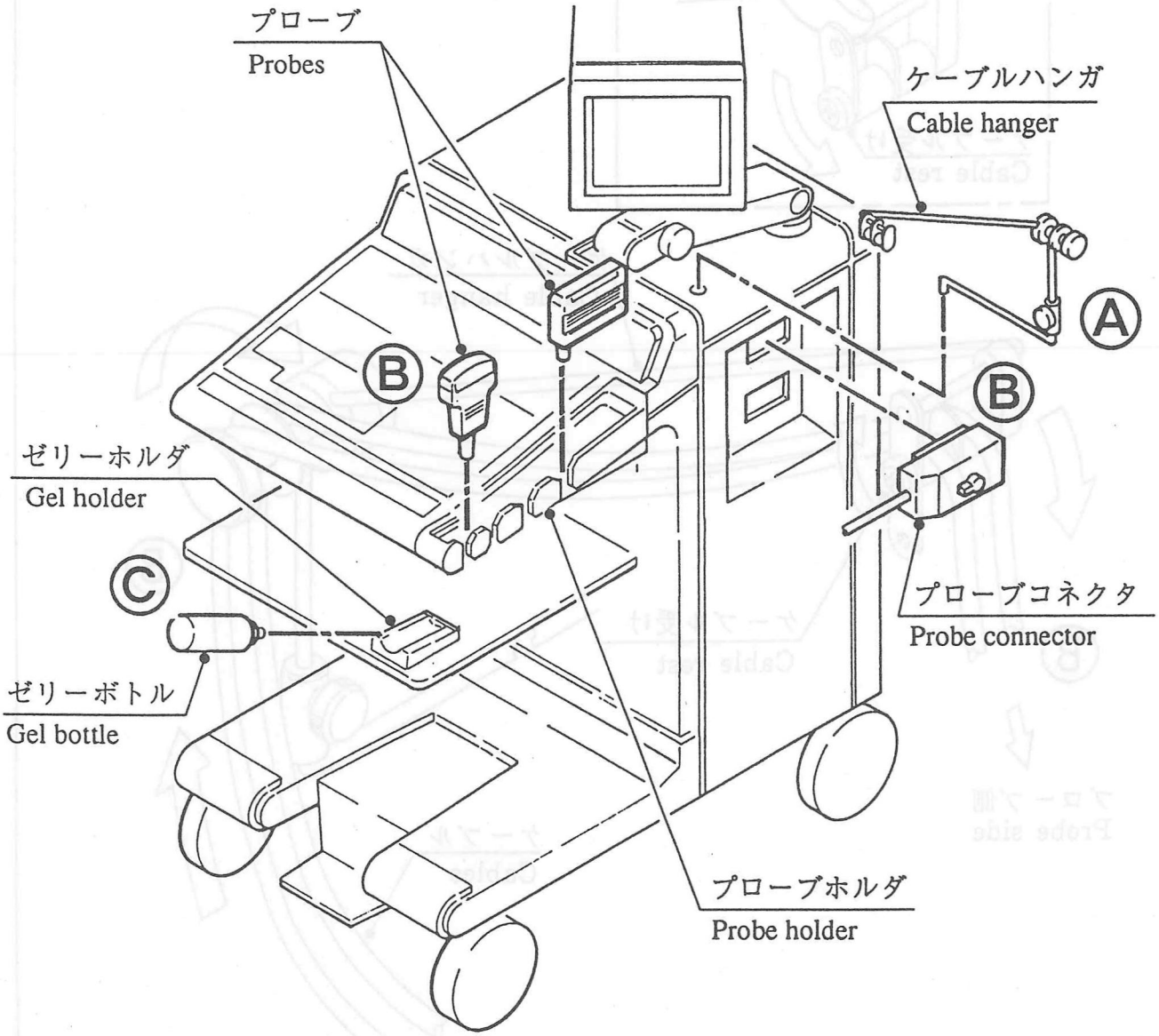


図4 Fig. 4

(3)ケーブル受の外側の部分を、下図の様に下に向ける。(図中Ⓐ)

(4)プローブのケーブルを、下図の様に引き回す。(図中Ⓑ)

(3)Orient the cable rest to have its outer end point downward as illustrated below. (Ⓐ in Fig.)

(4)Pass probe cables over the cable rest and elbow as illustrated below. (Ⓑ in Fig.)

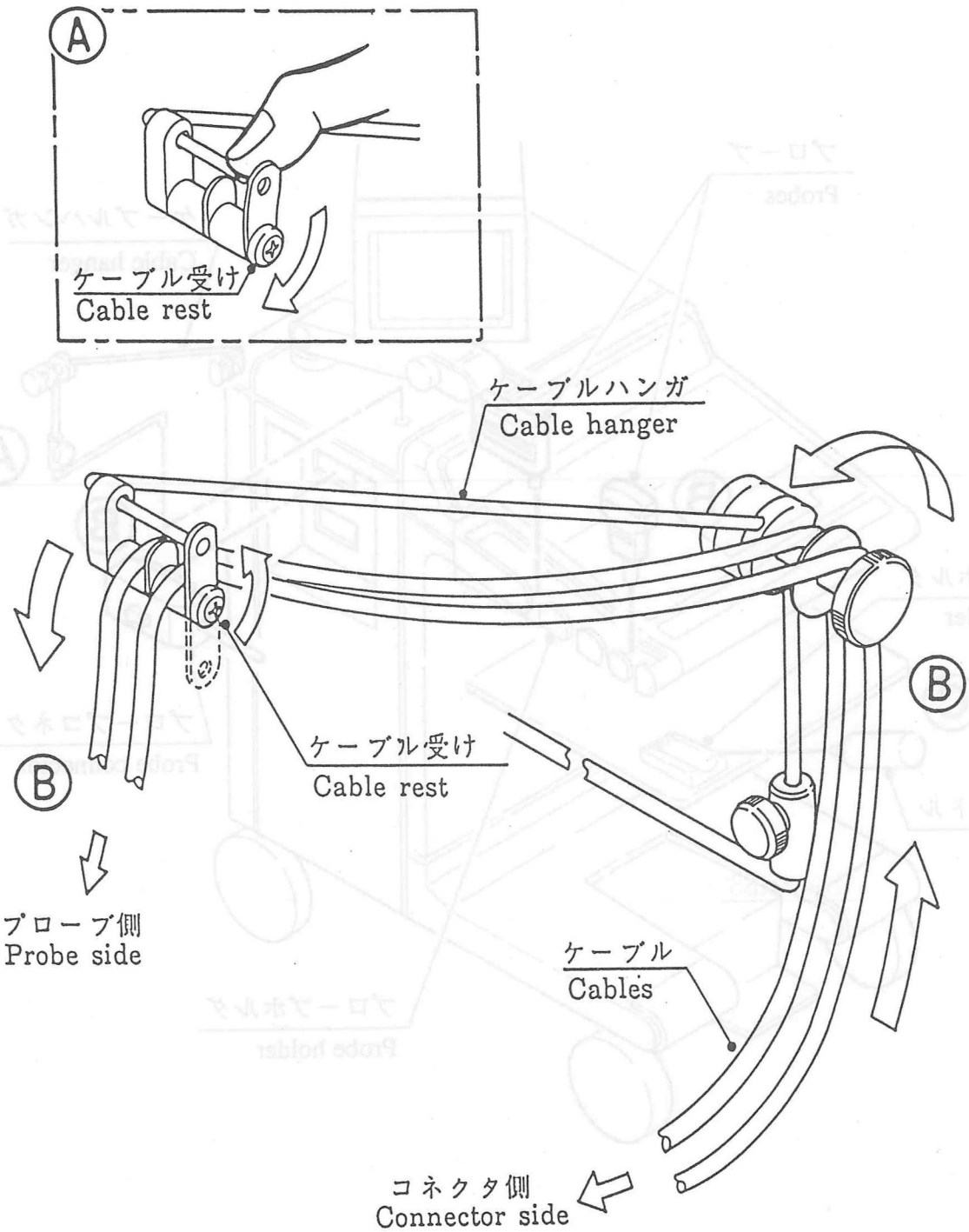


図5 Fig. 5

4.オプション機器の据付方法

❾撮影装置(SSZ-600)

(1)中間カバーをねじ2本を外して取り外す。(図中Ⓐ)

(2)中間カバーの裏側に固定されているカメラ信号ケーブル・信号ケーブル・SSZ-600用電源ケーブルを、クランプより外して取り外す。(図中Ⓑ)

(3)撮影装置背面から出ている電源ケーブルを、本体から出ているSSZ-600用電源ケーブルに接続する。(図中Ⓒ)

(4)カメラ信号ケーブルと電源ケーブルを、中間カバーの切り欠きに通して、中間カバーを、(1)と逆の手順で取り付ける。(図中Ⓓ)

※電源ケーブルのコネクタは本体内部に押し込んでおく。

4.Optional equipment installing procedure

❾Photographic equipment (SSZ-600)

(1)Remove the intermediate cover by removing the 2 screws. (Ⓐ in Fig.)

(2)Pull out the camera signal cable, signal cable and power supply cable for SSZ-600 from clanp on the rear side of the intermediate cover. (Ⓑ in Fig.)

(3)Connect the power supply cable extending from the back of photographic equipment with the power supply cable for SSZ-600 of the main unit. (Ⓒ in Fig.)

(4)Feed the camera signal cable and the power supply cable for SSZ-600 through the notch along the edge of the intermediate cover and fix the intermediate cover using the reverse procedure of (1). (Ⓓ in Fig.)

※Push the connector of power supply cable into the inner of the main unit.

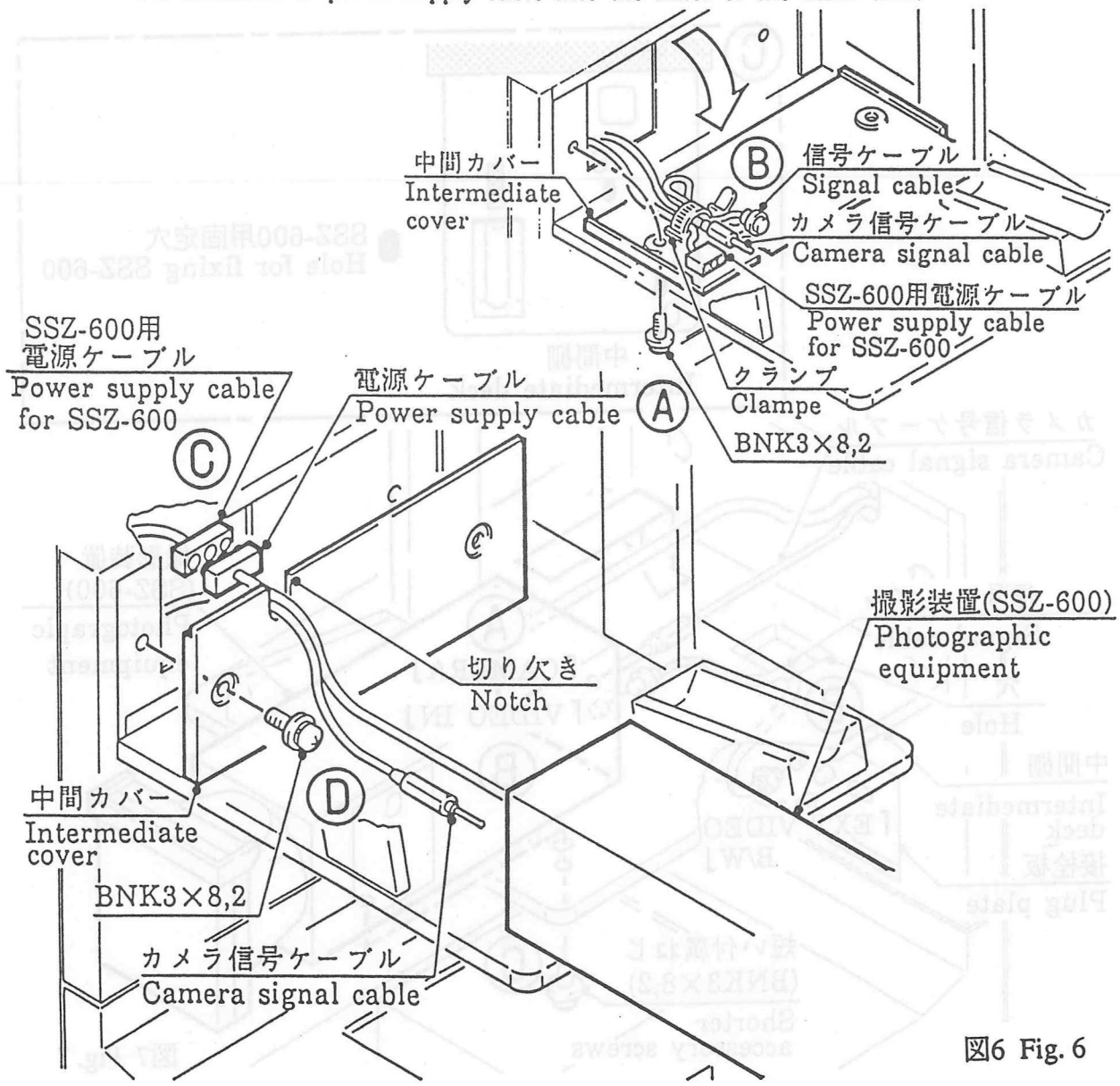


図6 Fig. 6

(5)カメラ信号ケーブルを、撮影装置背面の『CAMERA』に接続する。(図中Ⓐ)

(6)信号ケーブルの一方を、撮影装置背面の『VIDEO IN』に接続し、もう一方を、中間棚の穴を通し本体前面の接栓板『EXT VIDEO B/W』に接続する。(図中Ⓑ)

(7)撮影装置を、付属ねじの短い方(BNK3×8)2本で図の位置に据付け固定する。(図中Ⓒ)

注:付属ねじはプリンタ用(BNK3×16)、撮影装置用(BNK3×8)で長さが異なる。

(5)Connect the camera signal cable to『CAMERA』on the back side of photograpic equipment. (Ⓐ in Fig.)

(6)Connect the connector of signal cable to the『VIDEO IN』on the back side of photograpic equipment andother side through the hole intermediate deck and connect『EXT VIDEO B/W』to connection plug plate on the front face of the main unit. (Ⓑin Fig.)

(7)Fix the photograpic equipment in the figure with 2 shorter accessory screws (BNK3×8). (Ⓒin Fig.)

Note: Length of accessory screws for the printer (BNK3×16), and the photography unit (BNK3×8) differs from each other.

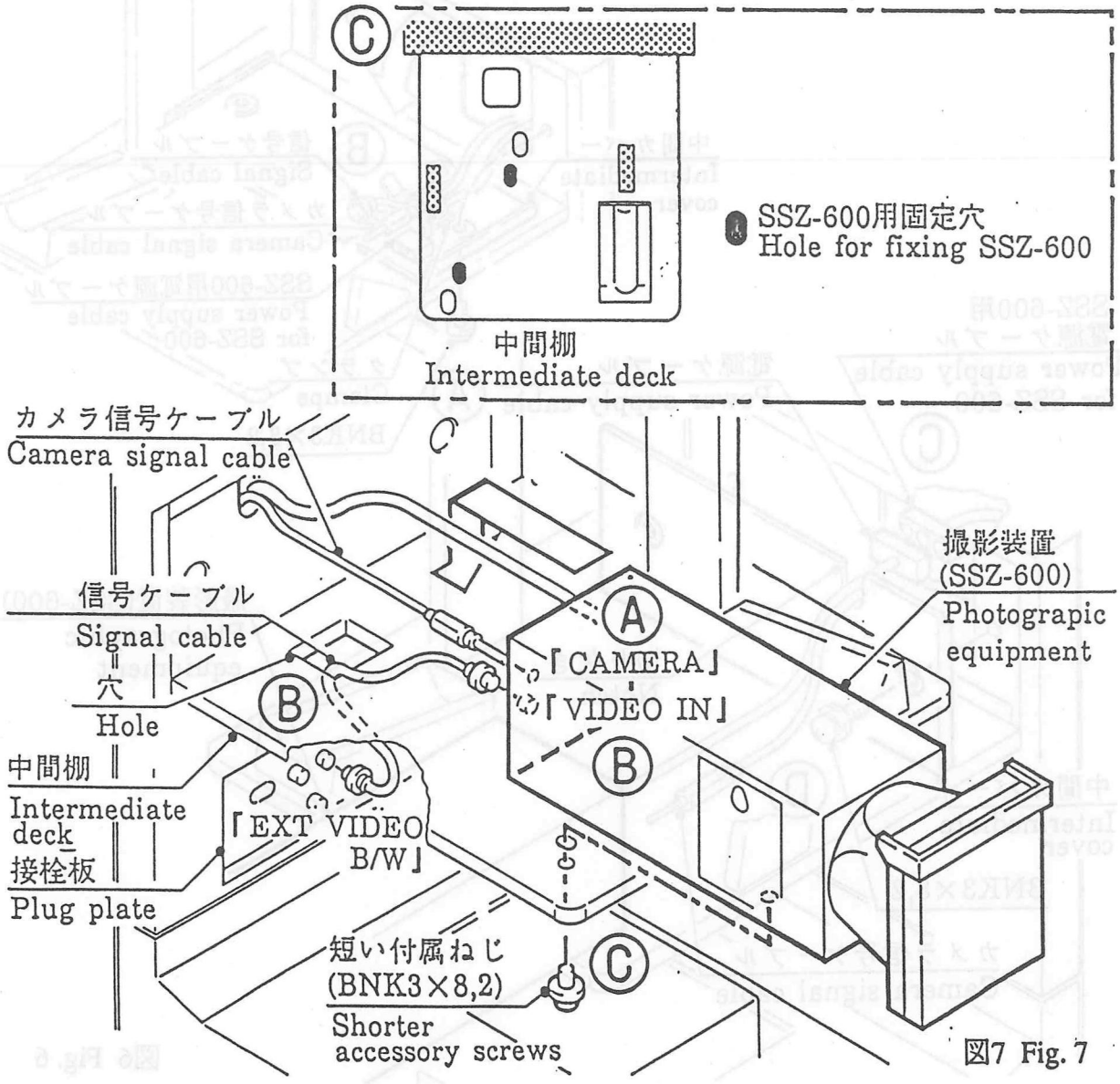


図7 Fig. 7

● プリンタ (SSZ-303) , カラー撮影装置 (SSZ-203), VTR (SVO-9500, AG-7300)

※VTR (SVO-9500)を中間棚に据付ける場合, プリンタ (SSZ-303), VTR (AG-7300)・・(2)の作業を行なうこと。
VTR (SVO-9500)を天板に据付ける場合・・・・・・・・・・・・・・・・・・・・・・ (2)' の作業を行なうこと。

(1) アイソレーショントランス (PTU-004) のふたを、ねじ、ワッシャ各2個を外して取り外し、電源ケーブルを接続する。(図中 Ⓐ )
※ アイソレーショントランスが搭載されていない場合は、外部ACラインに接続する。

(2) ケーブルクランプ (UL-13) 3個を、本体の図の位置に取付け、電源ケーブルを固定する。(図中 Ⓑ )

(2)' ケーブルクランプ (UL-13) 1個を、本体の図の位置に取付け、電源ケーブルを固定する。(図中 Ⓒ )

● Printer (SSZ-303) , Color Photographic Equipment (SSZ-203), VTR (SVO-9500, AG-7300)

※ Printer (SSZ-303), In case of the installation of VTR on the intermediate deck VTR (SVO-9500), VTR (AG-7300)・・Step (2) required.
In case of the installation of VTR on the upper plate VTR (SVO-9500)・・・・・・・・・・ Step (2)' required.

(1) Take out 2 screws and 2 washers and remove the lid of the isolation transformer (PTU-004) and connect the power supply cable. ( Ⓐ in Fig.)
※ When the isoration transformer is not mounted, connect it to the external AC line.

(2) Mount 3 cable clamps (UL-13) on the position of the body shown in the figure, and fix the power supply cable. ( Ⓑ in Fig.)

(2)' Mount 1 cable clamp (UL-13) on the position of the body shown in the figure, and fix the power supply cable. ( Ⓒ in Fig.)

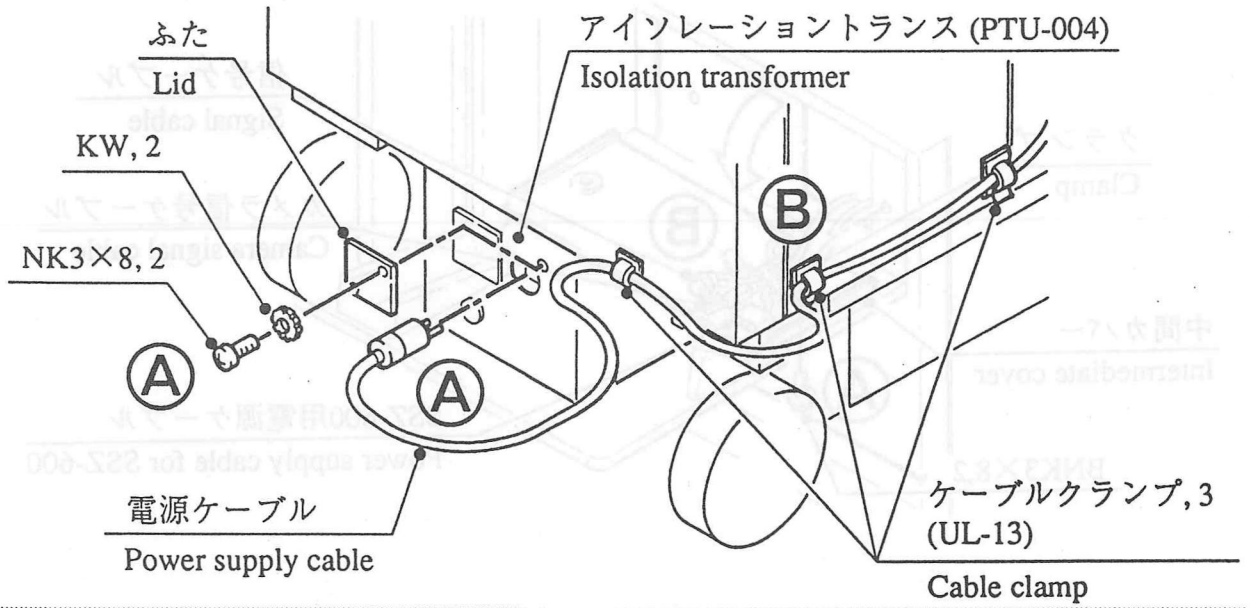


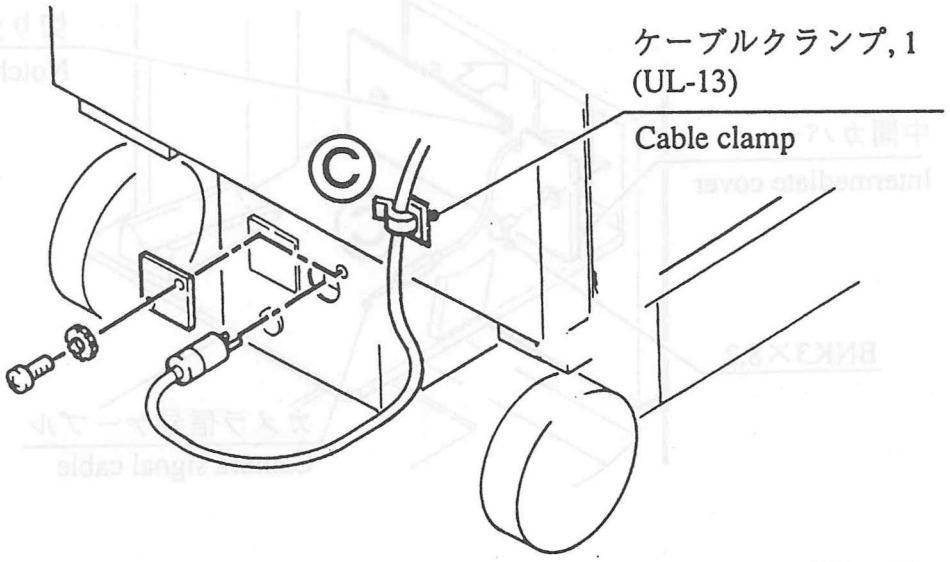


図8 Fig. 8

○ プリンタ(SSZ-303)

(3) 中間カバーを、ねじ2本を外して取り外す。(図中 Ⓐ )

(4) 中間カバーの裏側に固定されているカメラ信号ケーブルと信号ケーブルを、クランプより外して取り外す。(図中 Ⓑ )

※SSZ-600用電源ケーブルはクランプに固定しておく。

(5) カメラ信号ケーブルを、中間カバーの切り欠きに通して、中間カバーを、(3)と逆の手順で取り付ける。(図中 Ⓒ )

○ Printer (SSZ-303)

(3) Remove the intermediate cover by removing the 2 screws. ( Ⓐ in Fig.)

(4) Take out the camera signal cable and the signal cable which are clamped onto the rear side of the intermediate cover. ( Ⓑ in Fig.)

※ Leave the power supply cable for SSZ-600 clamped as it is.

(5) Feed the camera signal cable through the notch along the edge of the intermediate cover and fix the intermediate cover using the reverse procedure of (3). ( Ⓒ in Fig.)

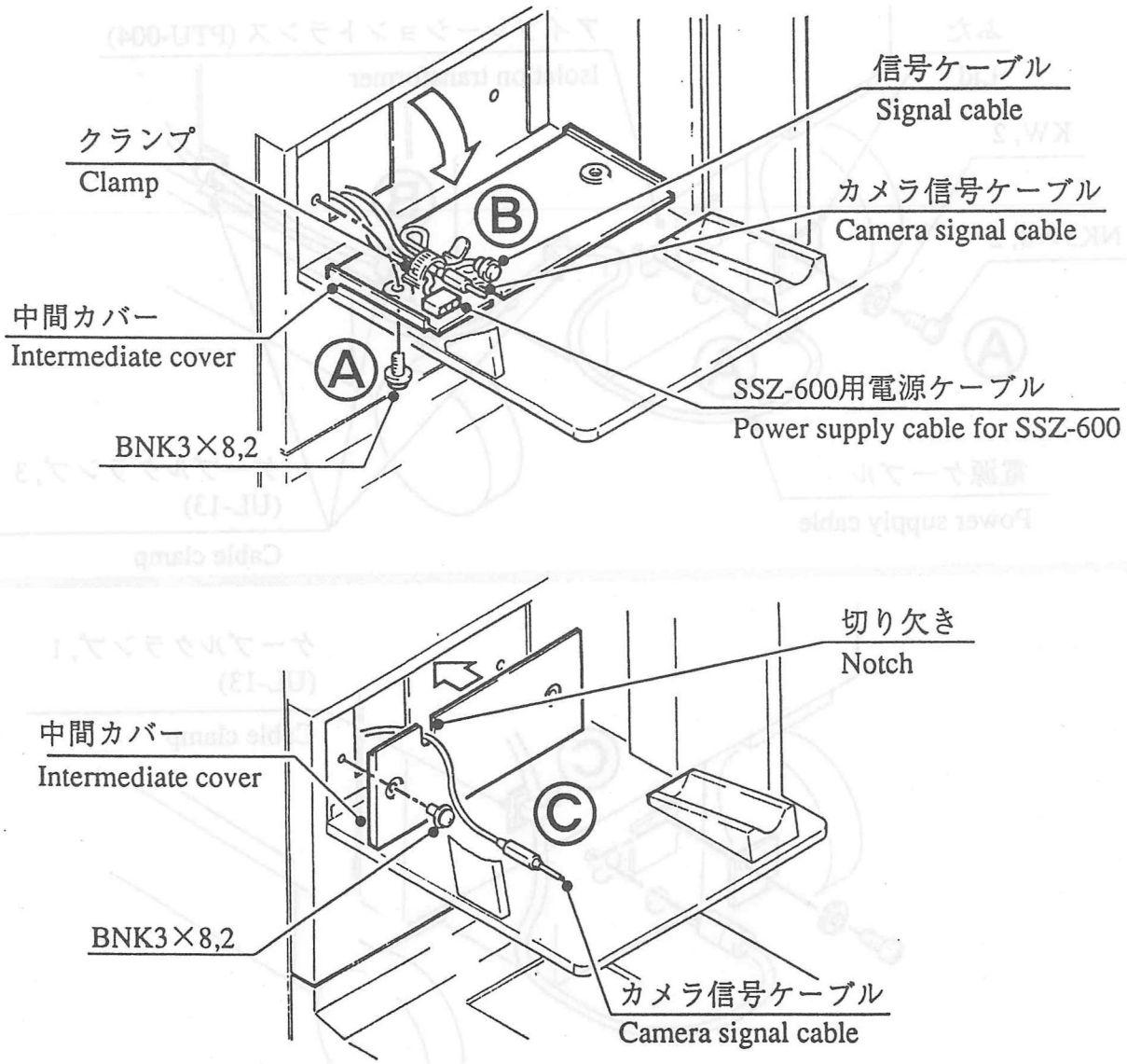


図9 Fig. 9

(6) デュアルロックファスナー(目の荒い方)を、中間棚に、図の様に張り付ける。(図中Ⓐ)

(7) デュアルロックファスナー(目の細かい方)を、プリンタの底面の出っ張りに、図の様に張り付ける。(図中Ⓑ)

(8) カメラ信号ケーブルを、プリンタ背面の『REMOTE』に接続し、SSZ-303用電源ケーブルを、中間棚の穴を通し、『AC IN』に接続する。(図中Ⓒ)

(9) 信号ケーブルの一方を、プリンタ背面の『VIDEO IN』に接続し、もう一方を、中間棚の穴を通し本体前面の接栓板『EXT VIDEO B/W』に接続する。(図中Ⓓ)

(10) プリンタを、中間棚に乗せる。(図中Ⓔ)

(6) Glue dual lock fastener (Rougher one) on the intermediate deck as shown in the figure in alignment. (Ⓐ in Fig.)

(7) Gule dual lock fastener (Finer one) on the extruded square on printer as shown in the figure. ( Ⓑ in Fig.)

(8) Connect the camera signal cable with the 『REMOTE』 of the back side of the printer and power suplly cable for SSZ-303 through the hole of the intermediate deck and connect with 『AC IN』.( Ⓒ in Fig.)

(9) Connect the connector of signal cable to the 『VIDEO IN』 on the back side of printer and other side through the hole of the intermediate deck and connect 『EXT VIDEO B/W』 to connection plug plate on the front face of the main unit. ( Ⓓ in Fig.)

(10) Place printer on the intermediate deck. ( Ⓔ in Fig.)

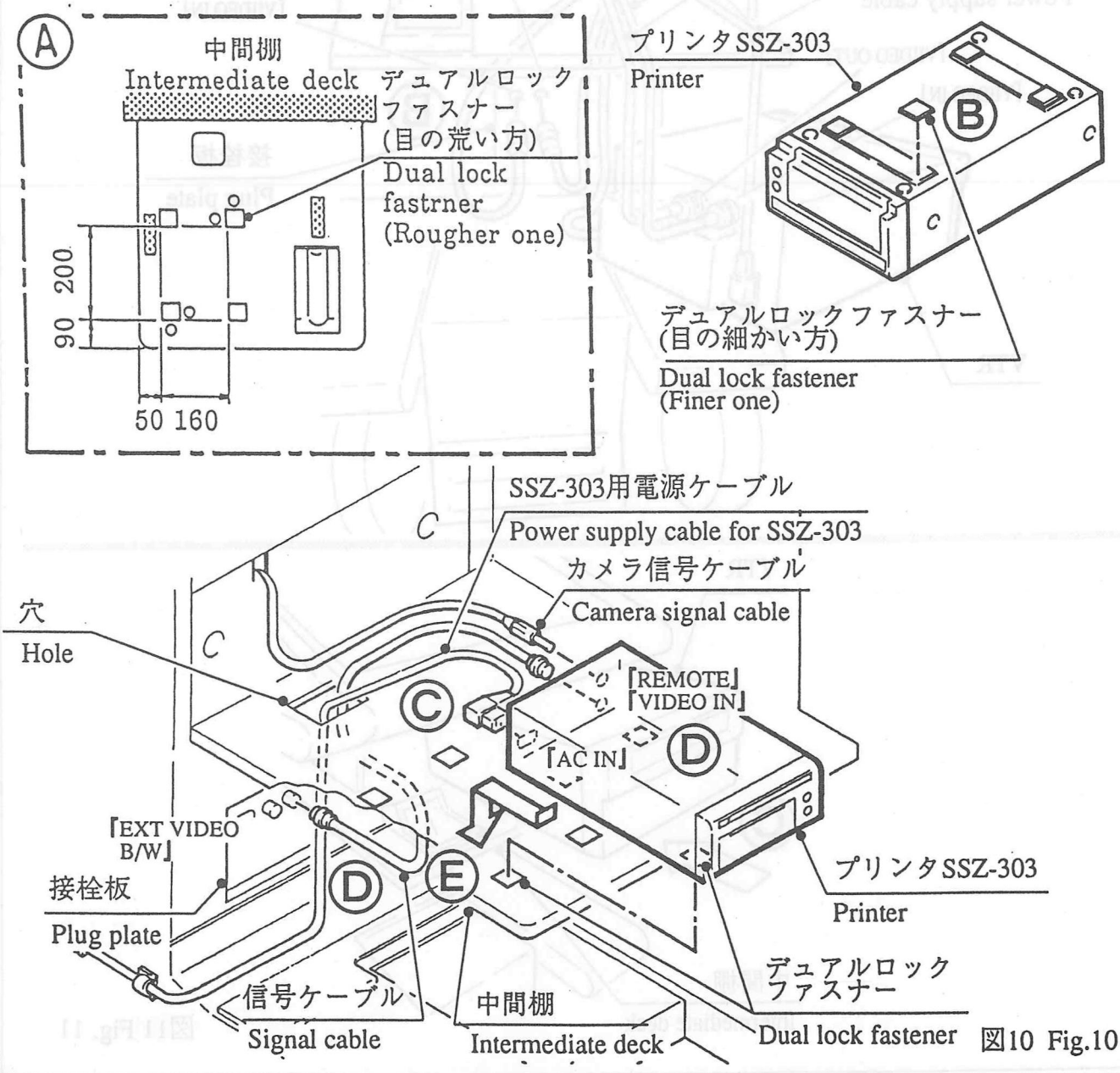


図10 Fig.10

○ VTR (SVO-9500)

1. 中間棚に据付の場合

(3) 信号ケーブル2本、電源ケーブルを中間棚の穴に通し (図中 Ⓐ )、
電源ケーブル、信号ケーブル2本を、VTR背面のコネクタにそれぞれ接続する。(図中 Ⓑ )

(4) 信号ケーブル2本を接栓板にそれぞれ接続する。(図中 Ⓒ )

(5) VTRを中間棚にのせる。(図中 Ⓓ )

○ VTR (SVO-9500)

1. In case of the installation on the intermediate deck

(3) Feed the 2 signal cables, power supply cable through the hole of the intermediate deck (Ⓐ in Fig.), connect the power supply cable and 2 signal cables to the connector on the back side of the VTR respectively. (Ⓑ in Fig.)

(4) Connect the 2 signal cables to the plug plate. (Ⓒ in Fig.)

(5) Put the VTR on the intermediate deck. ( Ⓓ in Fig.)

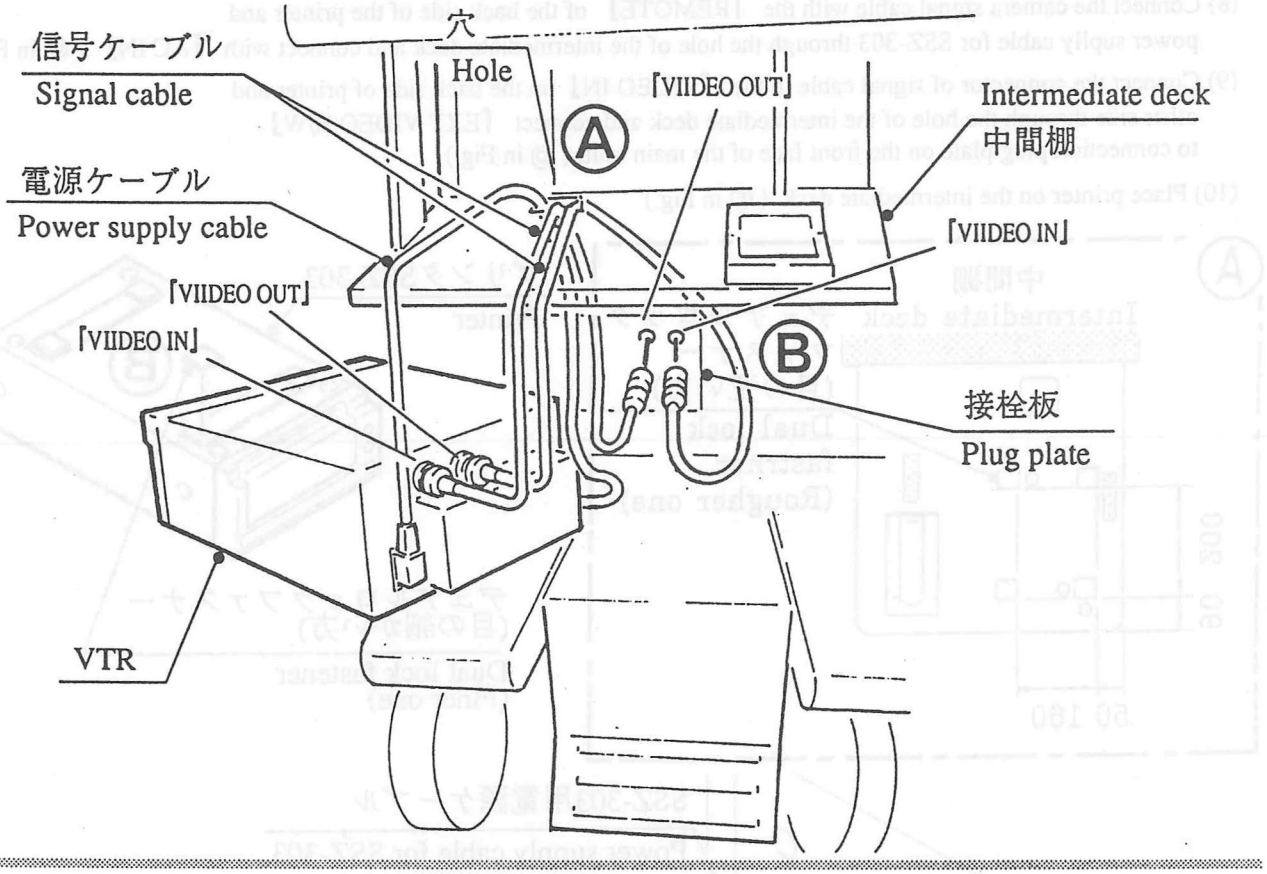


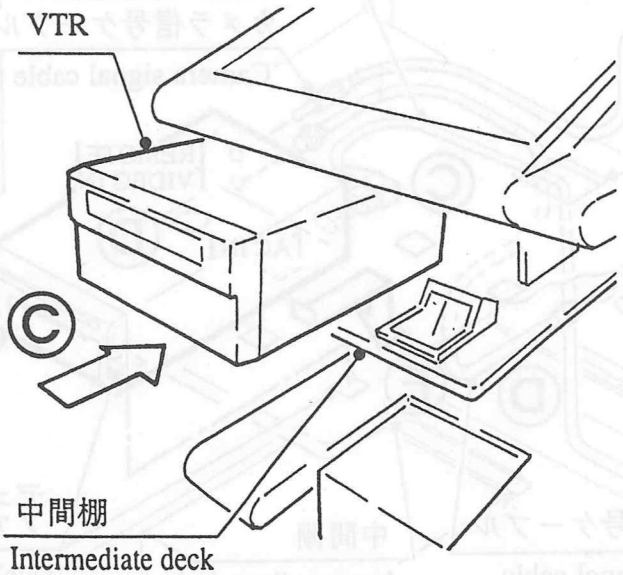


図11 Fig. 11

2. 天板上に据付の場合
(3) VTRを天板上にのせる。(図中 Ⓐ )
(4) 信号ケーブル2本を接栓板に接続する。(図中 Ⓑ )

2. In case of the installation on the upper plate
(3) Put the VTR on the upper plate. (Ⓐ in Fig.)
(4) Connect the 2 signal cables to the plug plate. (Ⓑ in Fig.)

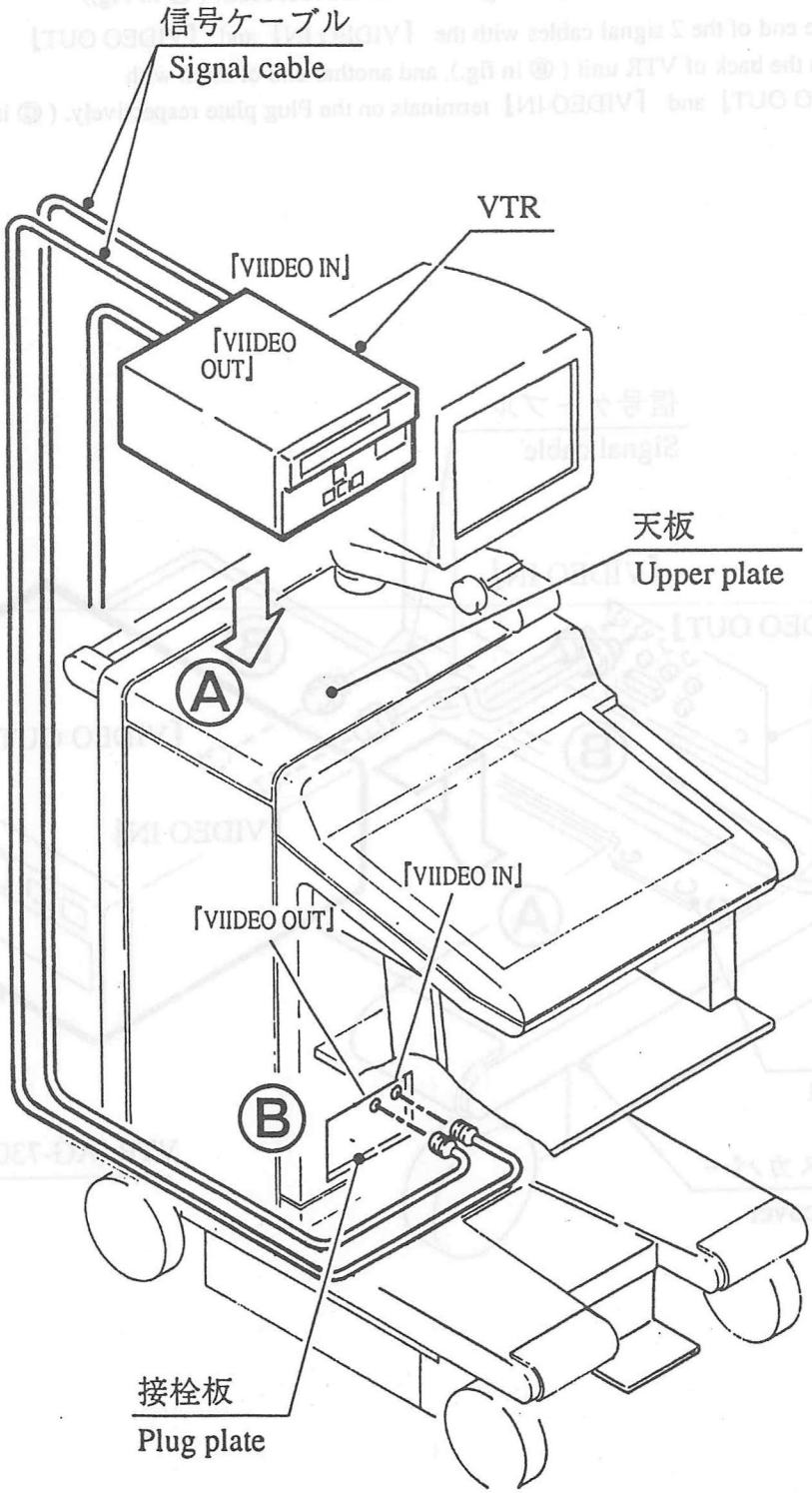


図12 Fig. 12

○ VTR(AG-7300)

(3) VTRの脚を、ベースカバーの脚受に合わせて載せる。(図中 Ⓐ )

(4) 信号ケーブルの2本の一方を、VTR背面の『VIDEO IN』と『VIDEO OUT』に接続し(図中 Ⓑ )、
もう一方を、本体前面にある接栓板の『VIDEO OUT』と『VIDEO IN』に
それぞれ接続する。(図中 Ⓒ )

○ VTR(AG-7300)

(3) Place the VTR on the base cover by fitting the foot in the foot seats. ( Ⓐ in Fig.)

(4) Connect one end of the 2 signal cables with the 『VIDEO IN』 and 『VIDEO OUT』
terminals on the back of VTR unit ( Ⓑ in fig.), and another end of them with
the 『VIDEO OUT』 and 『VIDEO IN』 terminals on the Plug plate respectively. ( Ⓒ in fig.)

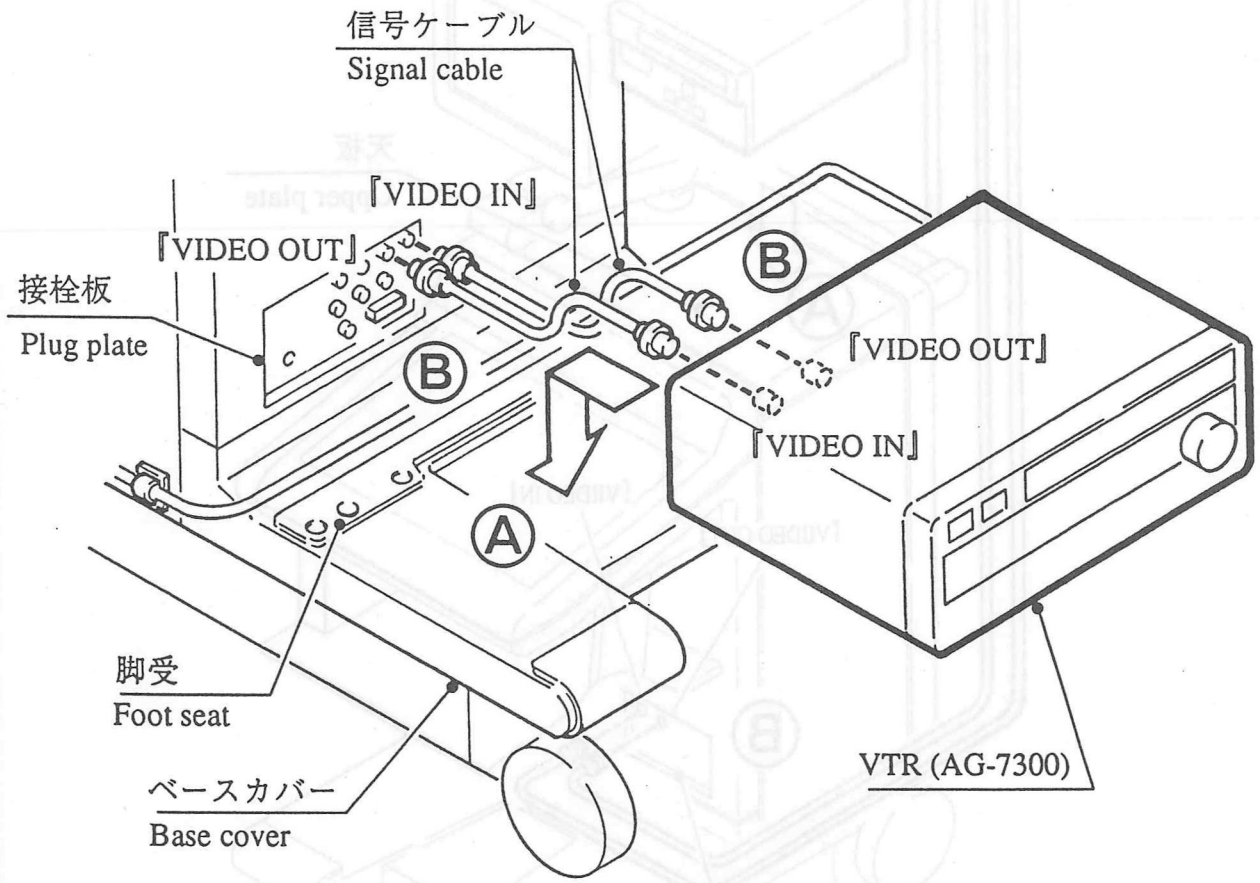


図13 Fig. 13

# UGR-680STD

SSD-680STD 改造キット

~~改造~~ 据付 ~~仕様書~~・要領書

| 整理番号 | MS5-0361 _ | 葉番 | 1 / 11 |
|---|---|---|---|

| 配布先 | | 名称 | SSD-680STD 改造キット | 作成 | 担当 | 検印 | 承認 |
|---|---|---|---|---|---|---|---|
| | | 形名 | UGR-680STD | 企画 課<br>93年 1月19日 | 企画G<br>'93.1.19<br>近藤 | | |
| | | オーダー | MW-24091 ～ | 備考 | | | |
| | | 納入先 | | | | | |
| 合計 | | | | | | | |

本書はSSD-680STDにドプラユニットUGR-680STDを取りつけるための改造要領書である。
すべてのSSD-680STDに適用される。

改造内容概略

1 パネルカバー類の取り外し
2 スピーカーの取りつけ
3 INDEPENDENTプローブコネクタの取りつけ
4 ドプラユニットDM-5の組み込み
5 アース板の取りつけ
6 ケーブル類の接続

本改造終了後、履歴表示銘板の1番にまるをつけること。

改造時間 約 2H

---

This manual is to install UGR-680STD in SSD-680STD.

Modification procedure

1 Take away cover panel.
2 Install speaker unit.
3 Install Independent probe connector.
4 Install Doppler unit DM-5
5 Put on ground plate.
6 Connect cables.

After all the modification is done, put circle on No. 1 of the mod.history label.

Modification time is about 2 hours.

出図印

| 改訂 | |
|---|---|

| 承認 | 作成 | 改訂 | 改訂 |
|---|---|---|---|
| | | | |

| 文書番号 | M58-0501 – | 改訂 |
|---|---|---|
| 名称 | SSD-680STD 改造キット | |
| 型名 | UGR-680STD | |
| 客先 | ホルダー | 個数 |
| | | 6 |

本書はSSD-680STDにドプラユニットUGR-680STDを取り付ける為の改造要領書である。
ヤマモトのSSD-680STDに適用される。

改造内容概略

1 パネルカバーの取り外し
2 スピーカーの取り付け
3 INDEPENDENTプローブコネクタの取り付け
4 ドプラユニットDM-6の組み込み
5 アース線の取り付け
6 ケーブル類の接続

本改造終了後、履歴表示銘板の1番に○をつけること。

改造履歴 No. 1

This manual is to install UGR-680STD in SSD-680STD.

Modification procedure

1 Take away cover panel.
2 Install speaker unit.
3 Install independent probe connector.
4 Install Doppler unit DM-6
5 Put on ground plate.
6 Connect cables.

After all the modification is done, put circle on No. 1 of the mod.history label.

使用部品リスト
parts list

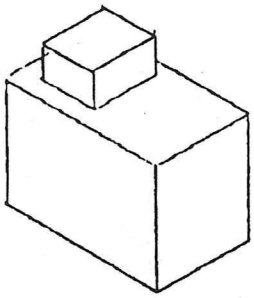

ドプラユニット(DM-5)
Doppler unit (DM-5)

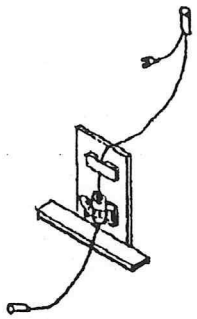


アース板
ground plate

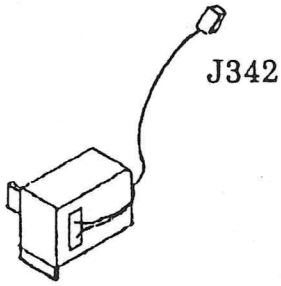


スピーカー
speaker unit

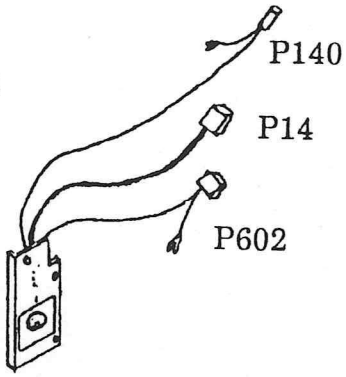


INDコネクタ板
IND connector

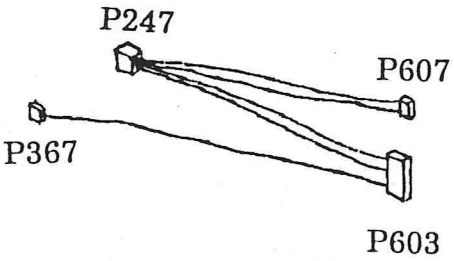


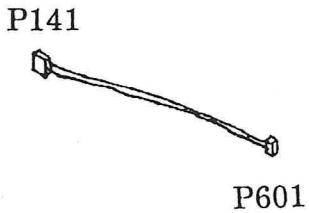


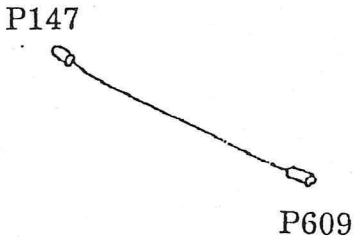


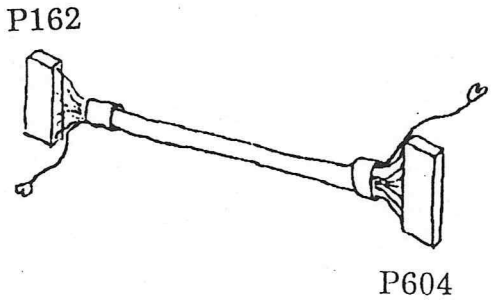


他ビス類
and screws

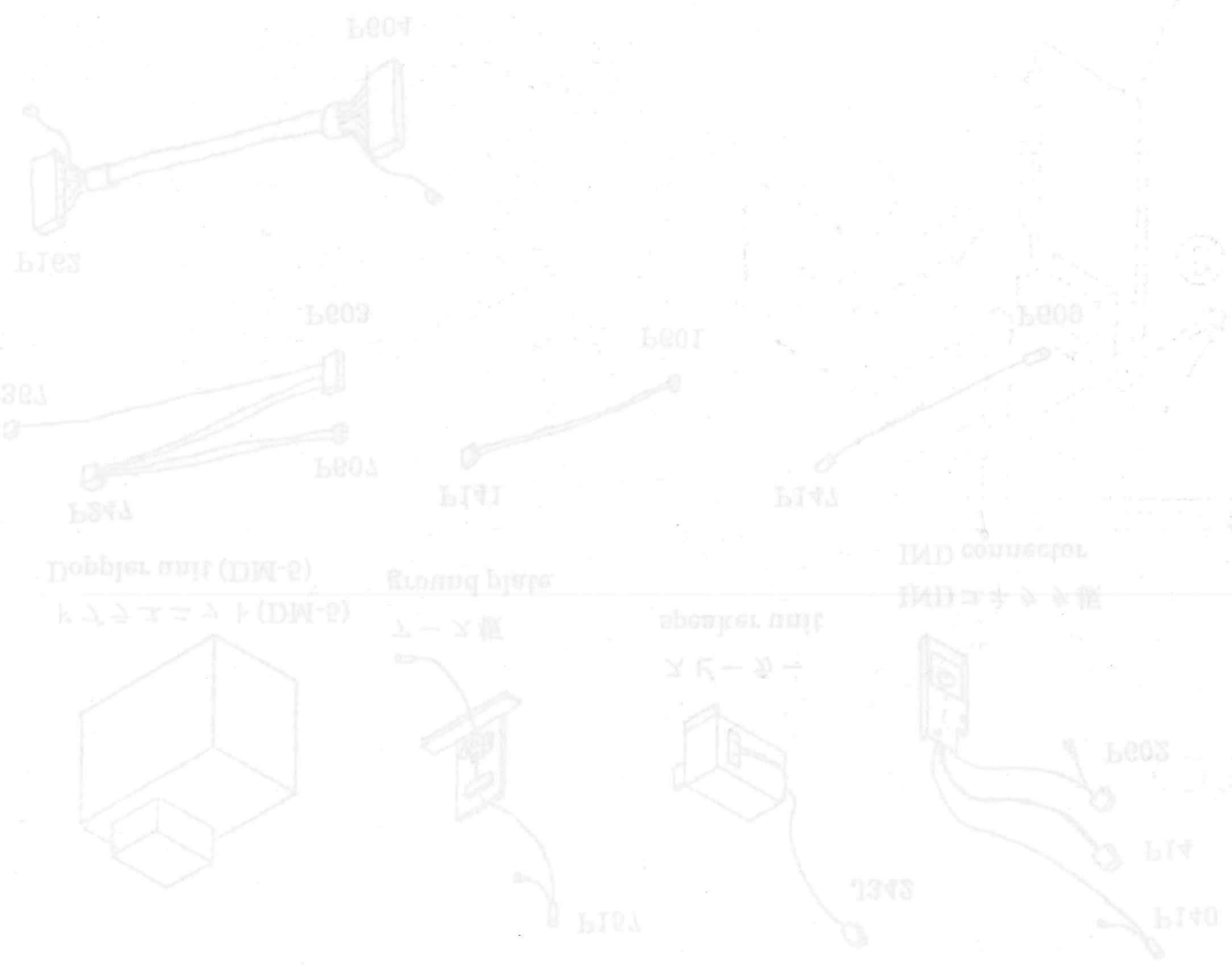

1) リアカバーを外す。(図中A)
2) 右サイドカバーを外す。(図中B)
3) エスカッションを開く。(図中C)
4) フロントカバーを外す。(図中D)
5) ベースカバーを外す。(図中E)

1) Remove the rear cover panel. (fig.A)
2) Remove the right side cover panel. (fig.B)
3) Open the operation panel. (fig.C)
4) Remove the front cover panel. (fig.D)
5) Remove the base cover panel. (fig.E)

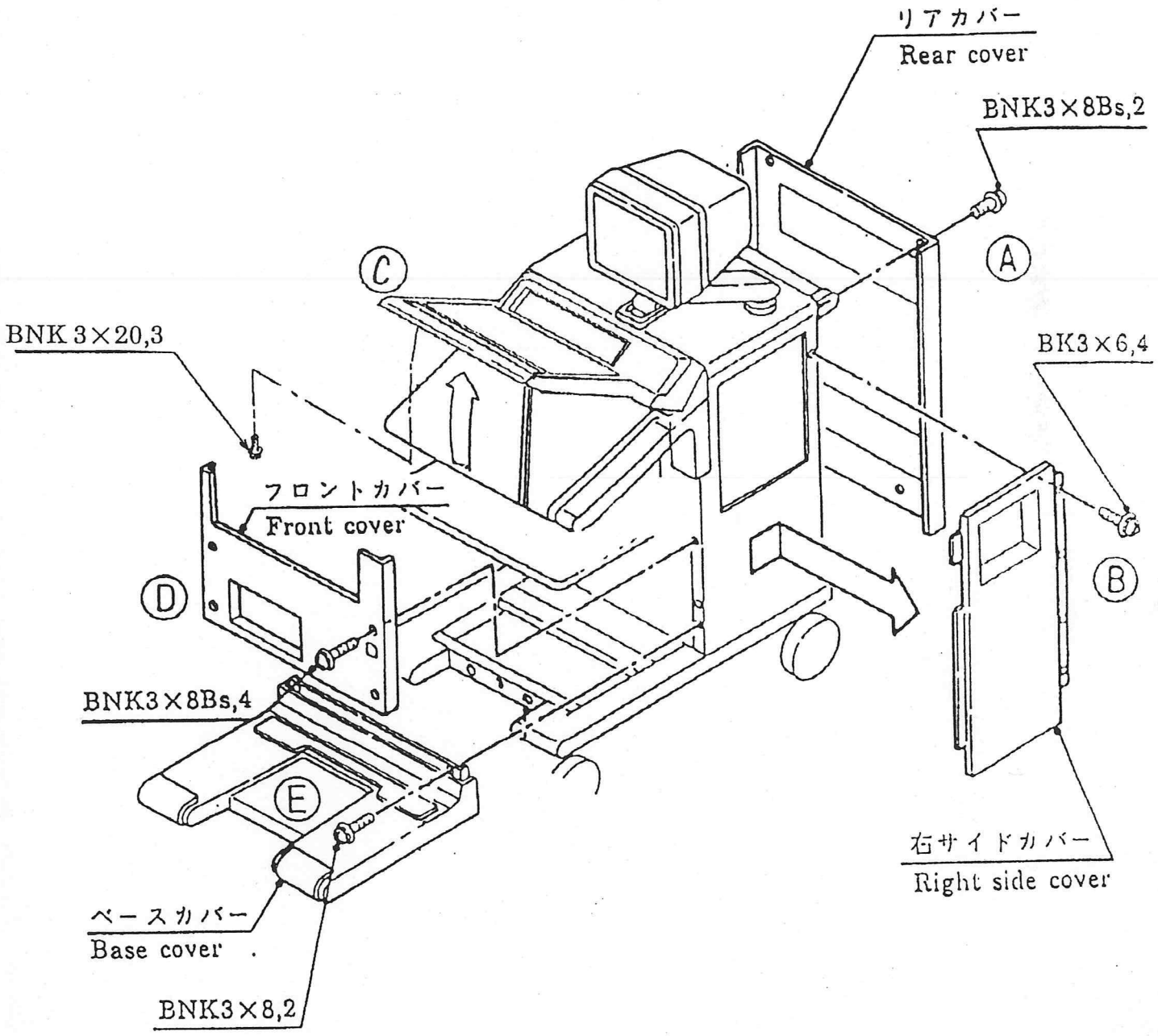

1) リアカバーを外す。（図中A）
2) 右サイドカバーを外す。（図中B）
3) 操作パネルを開く。（図中C）
4) フロントカバーを外す。（図中D）
5) ベースカバーを外す。（図中E）

1) GEUカバーを外す。(図中A)
2) IND盲板を外す。(図中B)
(これは不要となる。)
3) 電源右カバーを外す。(図中C)

1) Remove GEU unit cover. (fig.A)
2) Remove IND blind panel. (fig.B)
(no use anymore)
3) Remove IND blind panel. (fig.C)

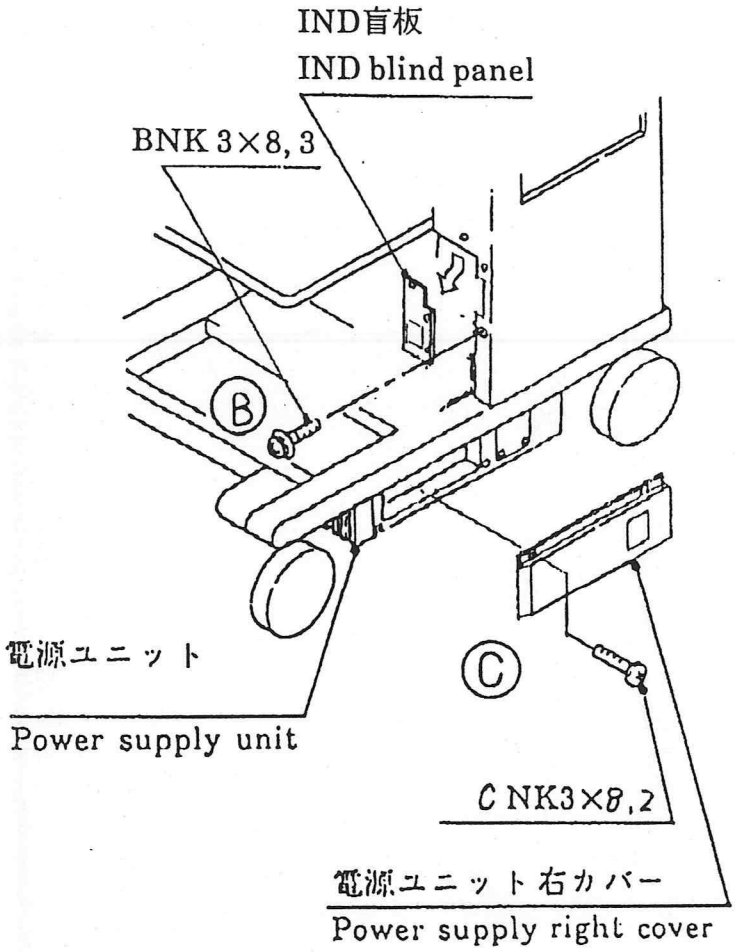


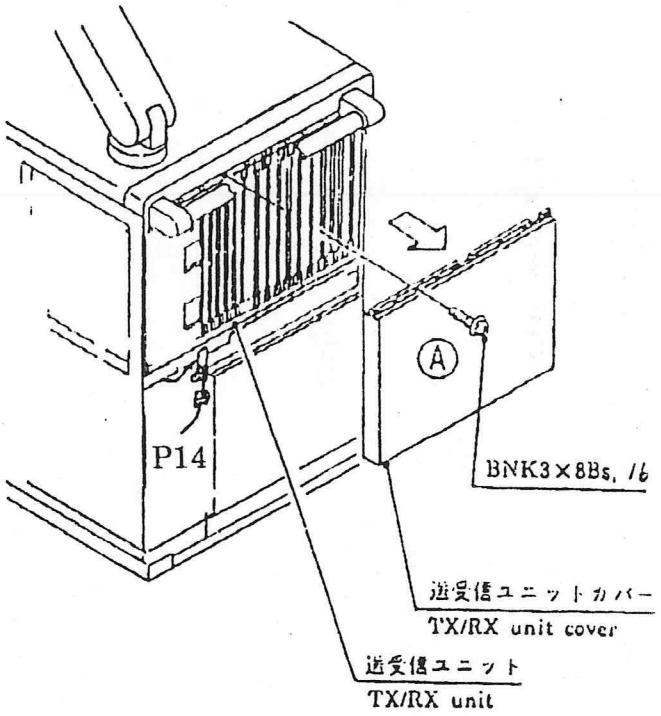

1) スピーカを固定し、J342をエスカッション内側にクランプされているP342と接続する。(図中A)

2) INDコネクタ板を固定し、P14 P602を本体のULクランプに通す。P140はクランプしない。(図中B)

1) Screw down the speaker unit and connect J342 with P342 which is clanped on the back of operation panel. (fig.A)

2) Screw down the IND connector and clanp P14 and P602 with cable clanp on the main unit. Do not clanp P140. (fig.B)

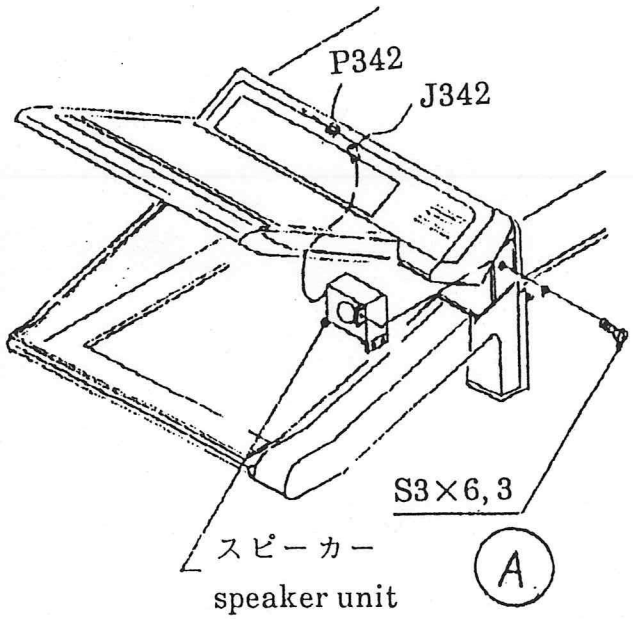


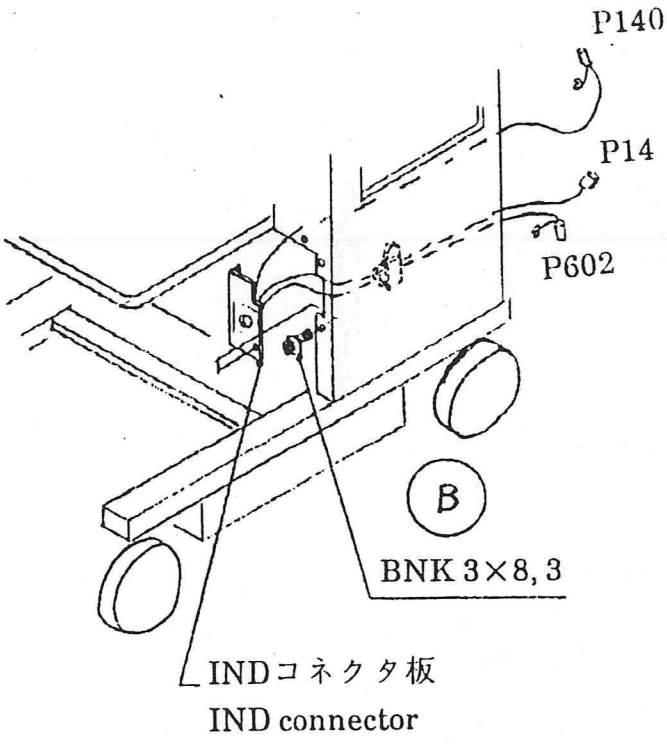

1) ドプラユニットを筐体に入れ基準アースにユニットのビスで共締めする。(図中A)

2) J512を電源に接続する。(図中B)

3) アース板をドプラのビスで共締めする。(図中C)

4) ドプラを本体に固定する。(図中D)

1) Install the Doppler unit and screw the unit together with the ground plate. (fig.A)

2) Connect J512 with P512 onthe power supply. (fig.B)

3) Screw down the ground plate with the screws of the Doppler unit. (fig.C)

4) Screw the Doppler unit with the main unit. (fig.D)

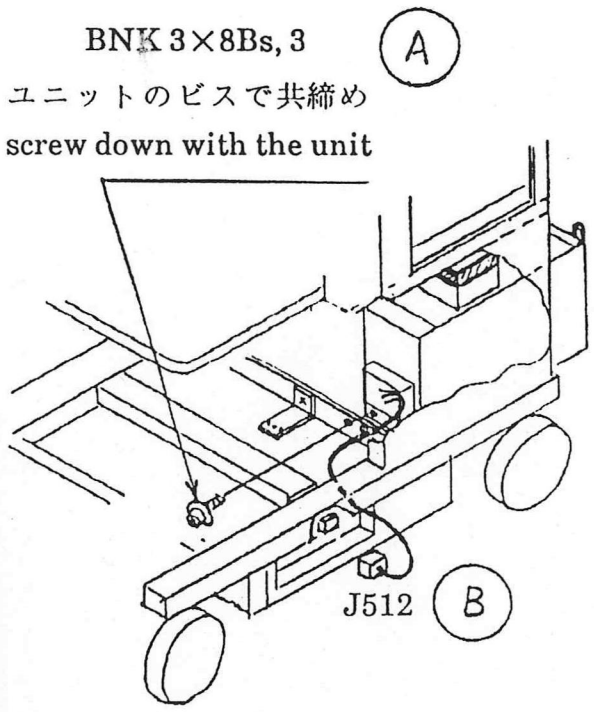


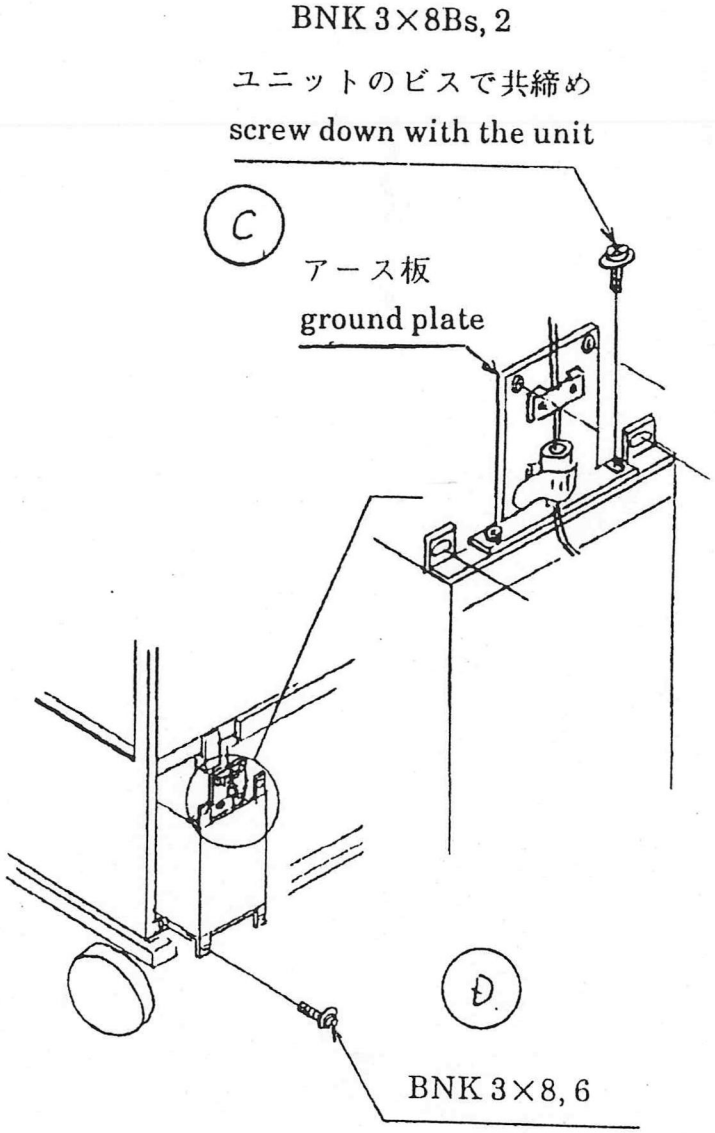

1) ドプラユニットを屋体に入れ基準
アースにユニットのビスで共締め
する。(図中A)

2) J512を電源に接続する。(図中B)

3) アース板をドプラのビスで共締め
する。(図中C)

4) ドプラを本体に固定する。(図中D)

1) Install the Doppler unit and screw the unit together with the ground plate. (fig.A)

2) Connect J512 with P512 on the power supply. (fig.B)

3) Screw down the ground plate with the screws of the Doppler unit. (fig.C)

4) Screw the Doppler unit with the main unit. (fig.D)

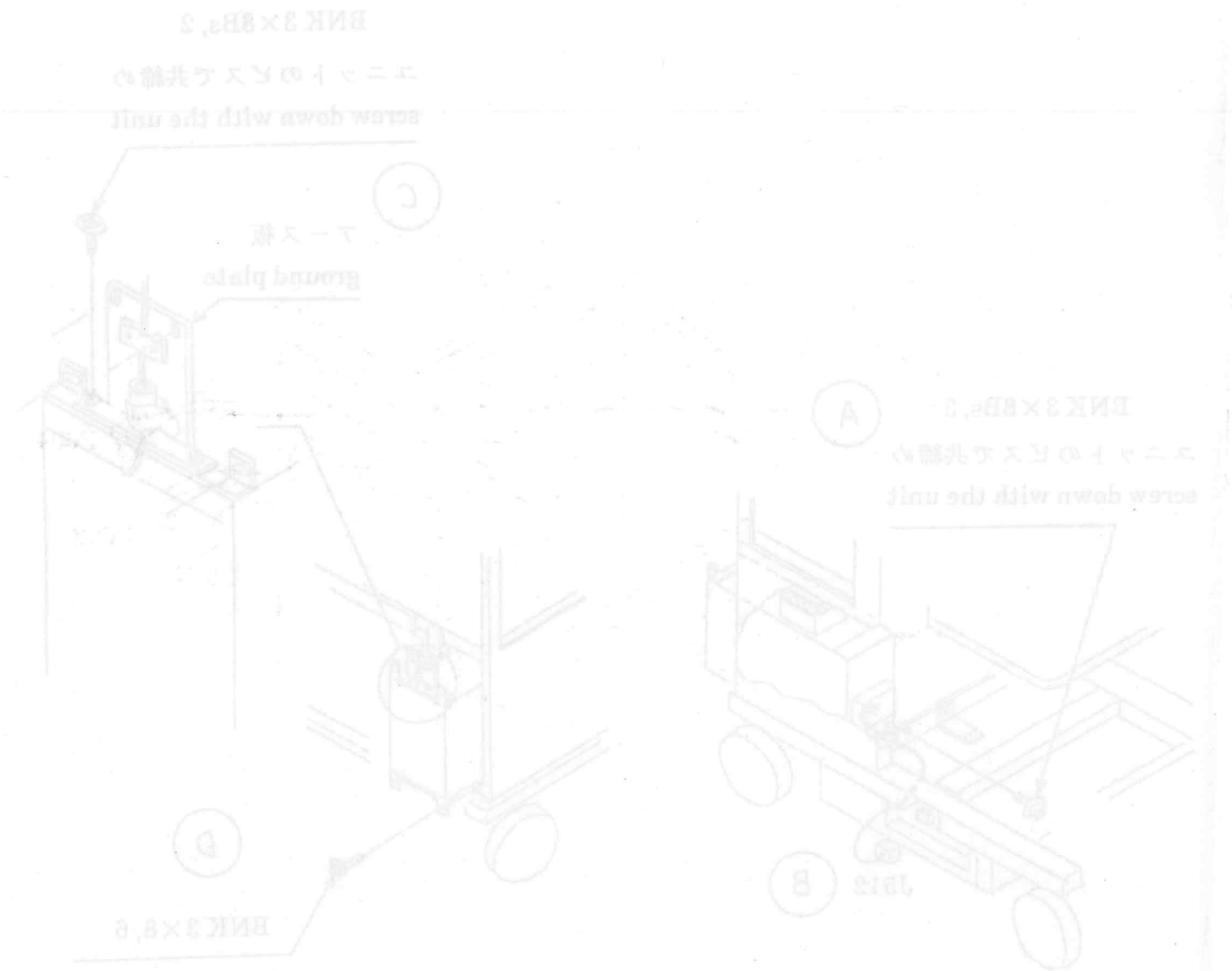

1) P162をGUE裏面のEP-3525に接続する。(図中A)
2) P367をブラインドパネルEP-2512に接続する。(図中B)
3) P247をUIM接栓板に接続し、本体のULクランプに通す。(図中C)

1) Connect P162 with J162 on EP-3525 which is on the back of GEU unit. (fig.A)
2) Connect P367 with J367 on EP-2512 which is on the back of blind panel. (fig.B)
3) Connect P247 with J247 on UIM connector box, and clanp it with cable clanp. (fig.C)

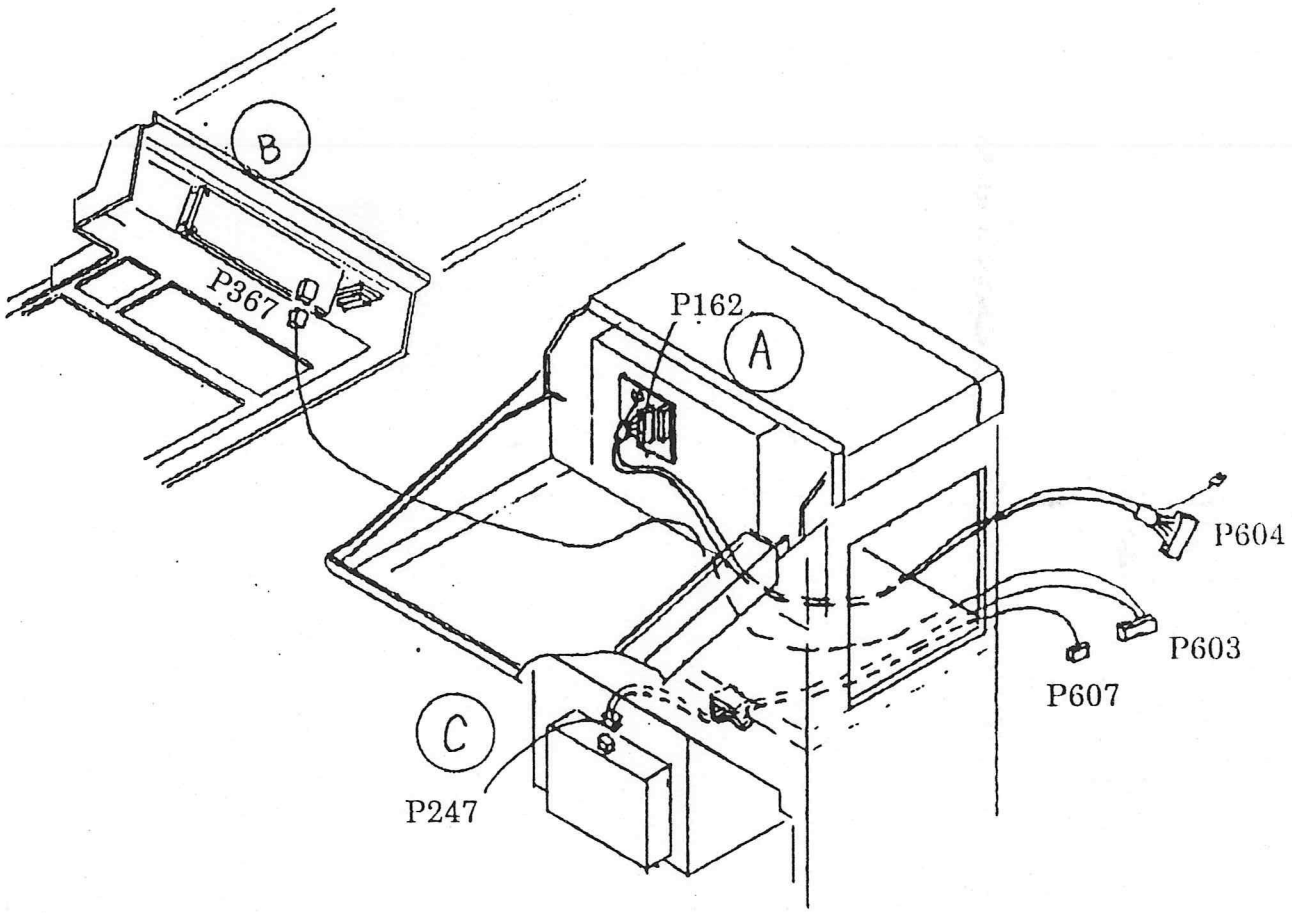

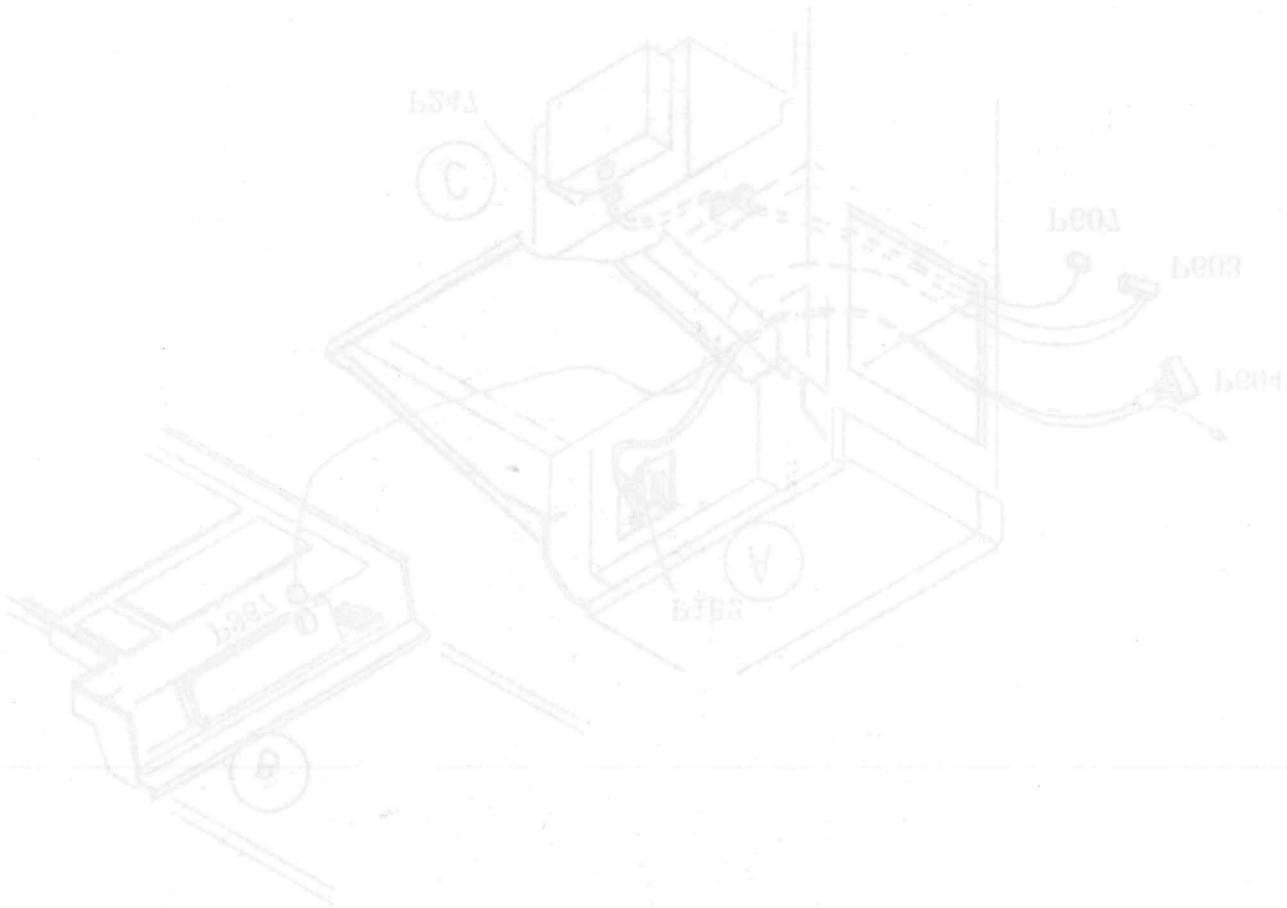

1) 各コネクタを図のように接続する。

1) Connect each cable as indicated in the fig.

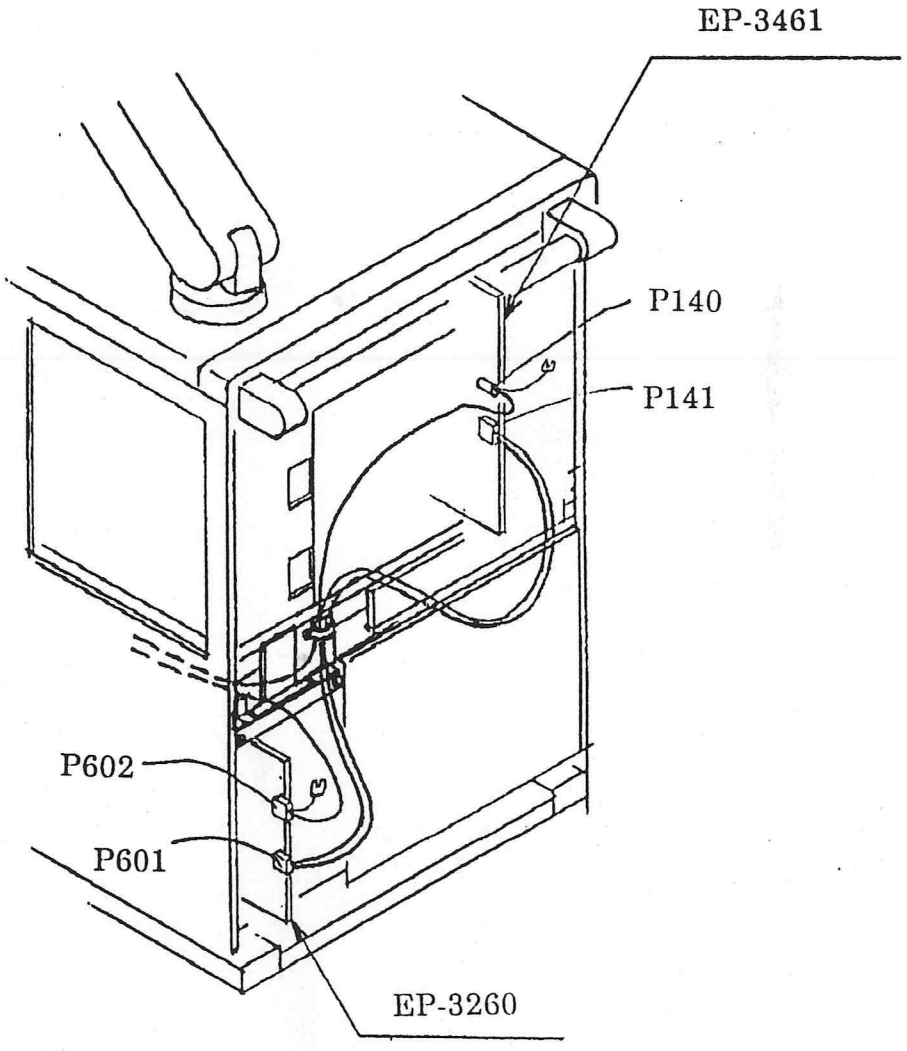

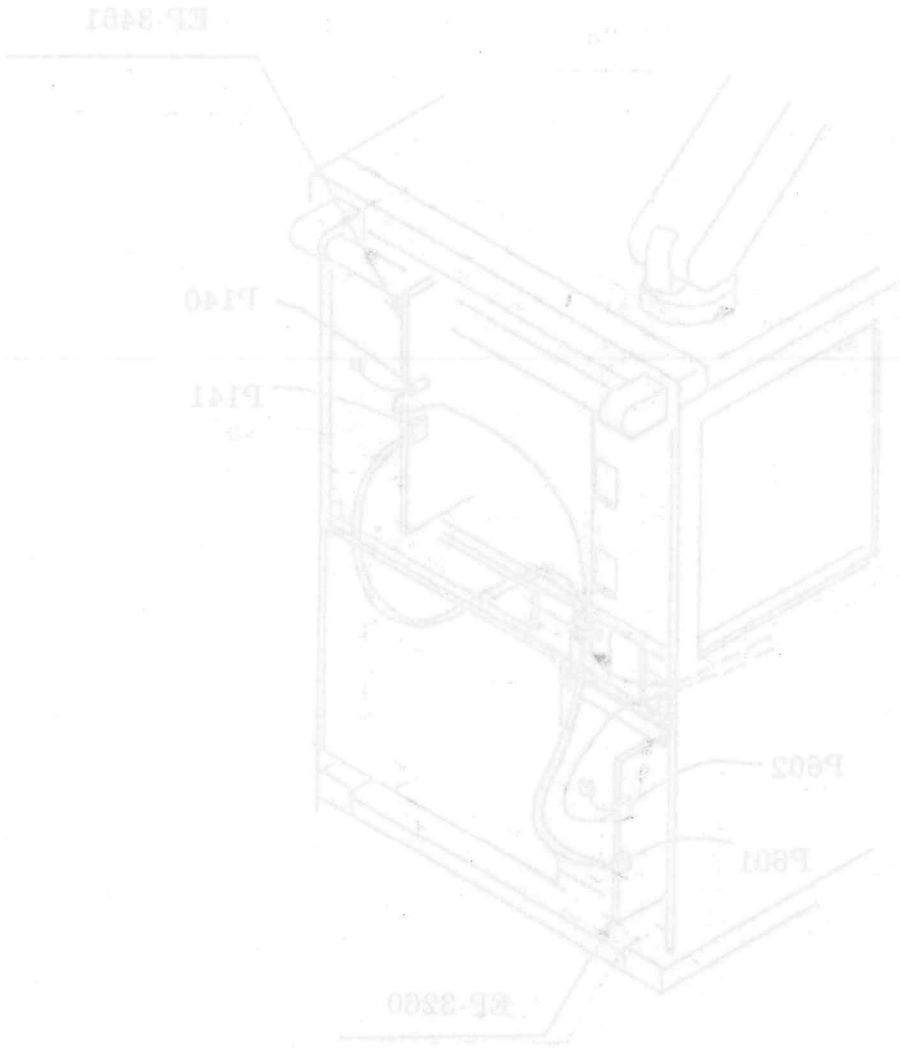

1) 各コネクタを図のように接続する。

1) Connect each cable as indicated in the fig.

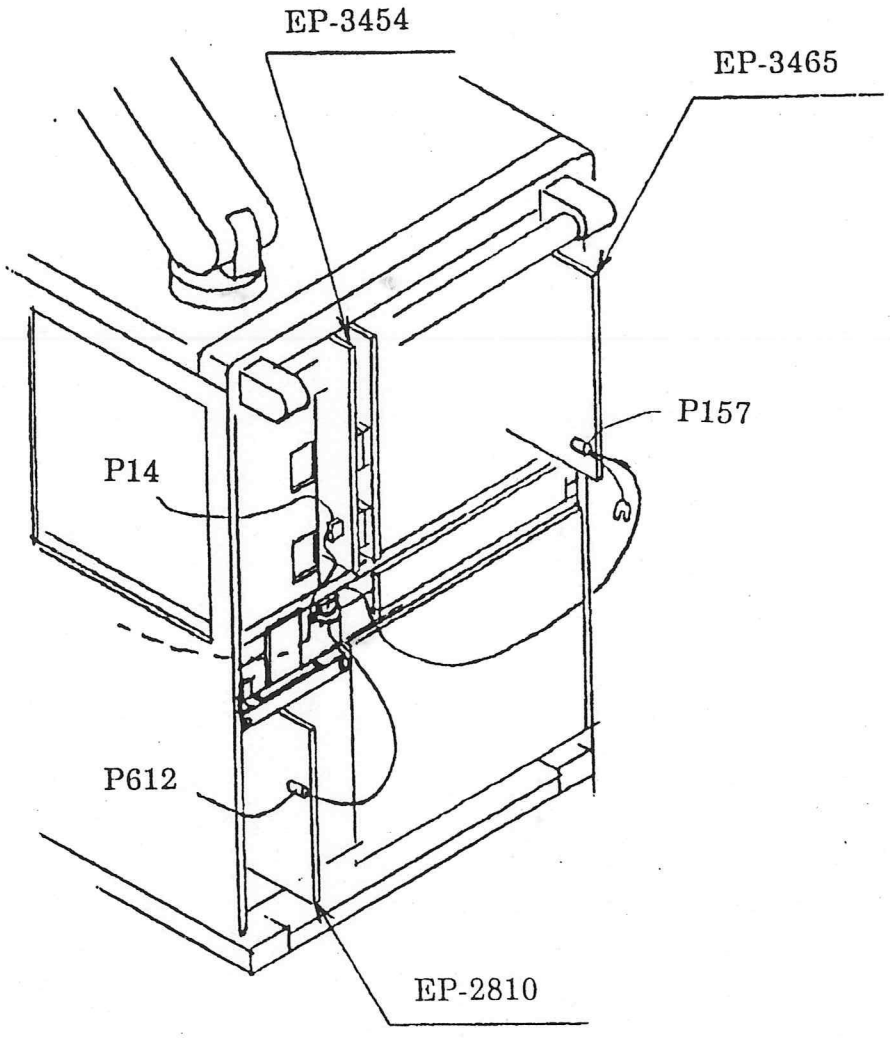

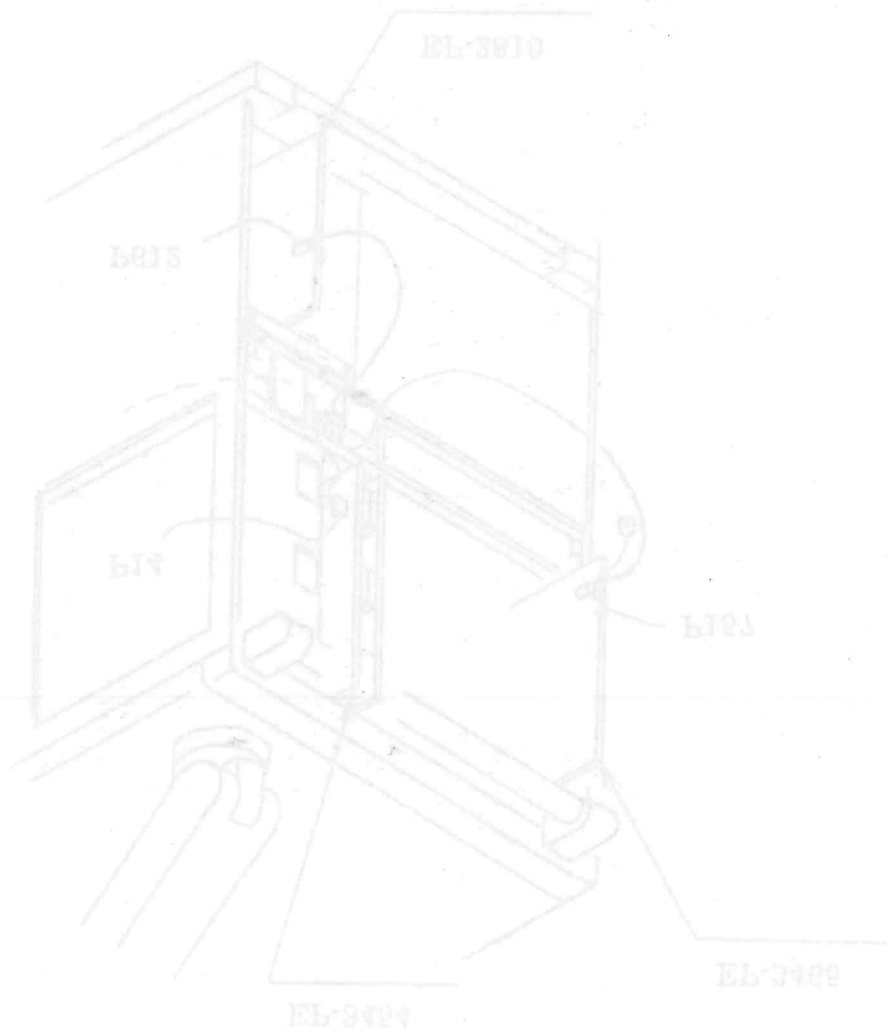

1) 各コネクタを図のように接続する。

1) Connect each cable as indicated in the fig.

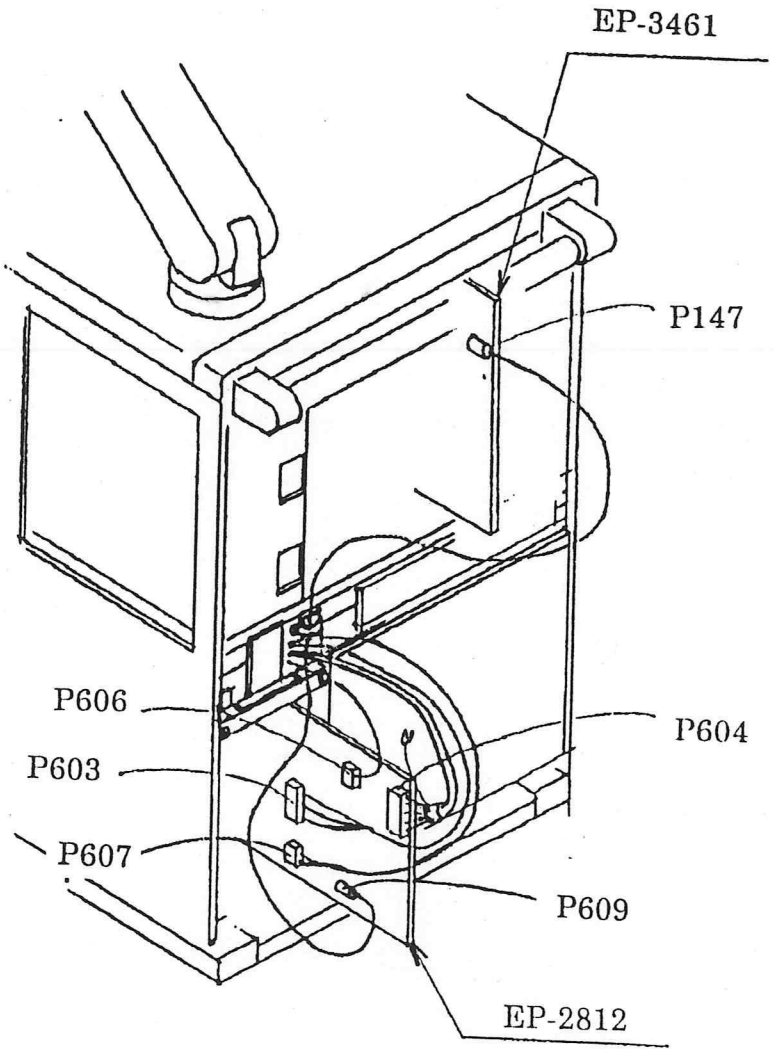

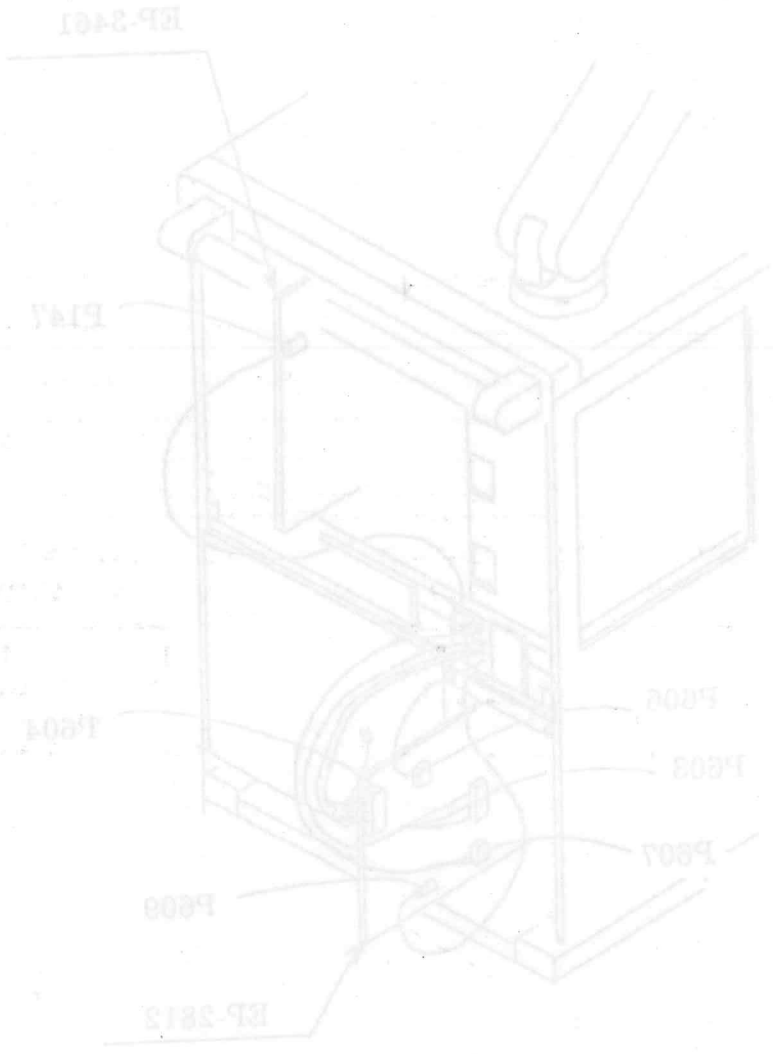

1) EP-3265のディップスイッチの設定を図のようにする。

2) 電源を入れ、ドプラが正常に機能しているか確認する。

3) すべてのカバーをもとにもどす。アース端子は近くのカバービスと共締めする。

1) Set the digital switch on EP-3265 as indicated in the figure.

2) Power on and check the Doppler function.

3) Take the all the cover panel on. Screw the ground cables together with the covers.

国内、一般貿易向け
For all countries without USA

CFM-680STDが組み込まれていない場合
In case CFM-680STD is not installed.

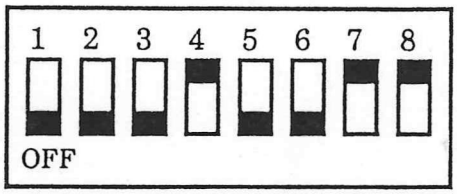


CFM-680STDが既に組み込まれている場合
In case CFM-680STD is already installed.

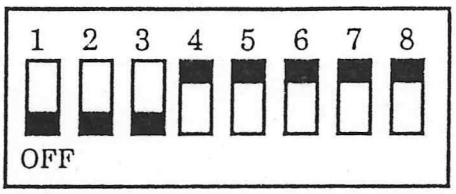


Aloka USA およびCorometrics向け
For Aloka USA and Corometrics inly

CFM-680STDが組み込まれていない場合
In case CFM-680STD is not installed.

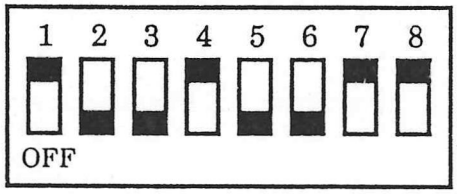


CFM-680STDが既に組み込まれている場合
In case CFM-680STD is already installed.

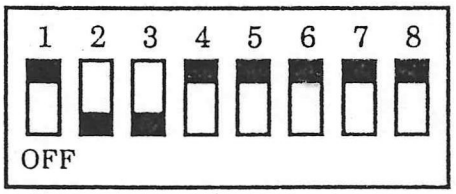


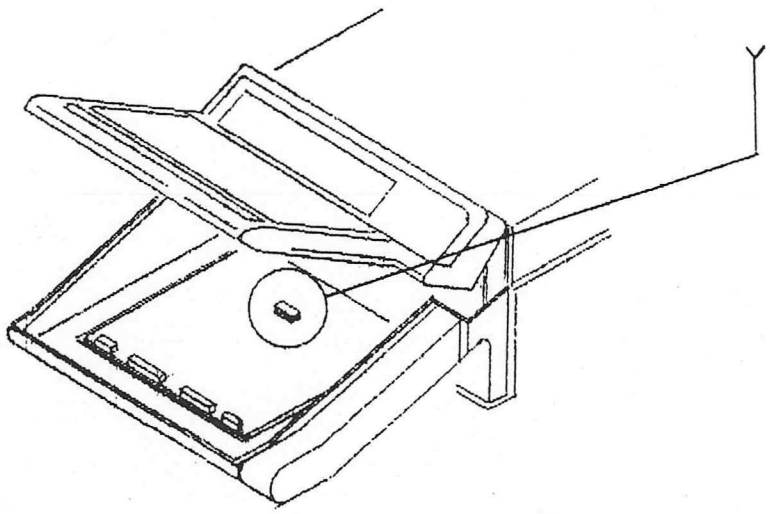

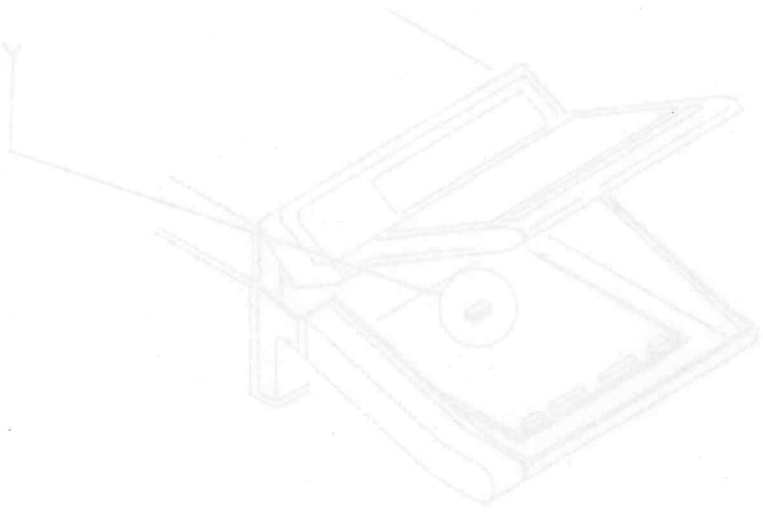

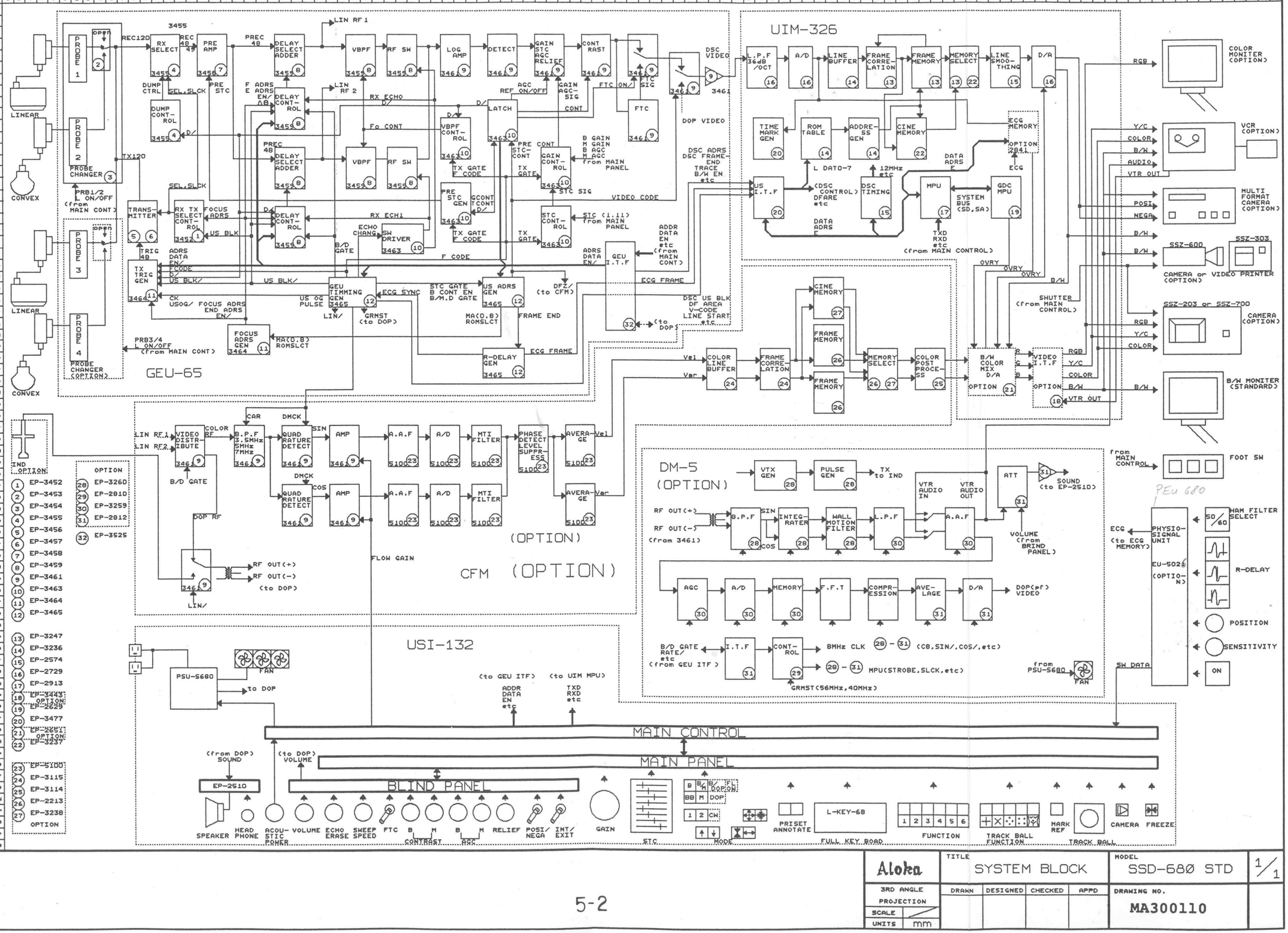


| | |
|---|---|
| Aloka | |
| TITLE | SYSTEM BLOCK |
| MODEL | SSD-680 STD |
| 3RD ANGLE PROJECTION | |
| SCALE | |
| UNITS | mm |
| DRAWN | |
| DESIGNED | |
| CHECKED | |
| APPD | |
| DRAWING NO. | MA300110 |
| | 1/1 |

REVISIONS

## 6-1 EP-3265 MAIN CONTROL

このPCBは、HD68B09(MPU)を搭載し、PANELなどからの各種情報を読み、DSCユニット及び送受信ユニット(GEU)へ命令を送ると共に、PANEL LUMPの点滅の制御などを行っている。又DOPPLERユニットとの情報交換(GEUユニット経由)及び、生体ユニット(OPTION)の制御も行われている。

SIGNAL LIST

| J370 | |
|---|---|
| 1 | GND |
| 2 | TXD+ |
| 3 | TXD− |
| 4 | RXD+ |
| 5 | RXD− |
| 6 | TXC+ |
| 7 | TXC− |
| 8 | RXC+ |
| 9 | RXC− |
| 10 | |

| J371 | |
|---|---|
| 1 | +x |
| 2 | −x |
| 3 | +y |
| 4 | −y |
| 5 | B1 FRZ/ |
| 6 | B2 FRZ/ |
| 7 | M FRZ/ |
| 8 | GND |
| 9 | GND |
| 10 | GND |
| 11 | |
| 12 | |
| 13 | |
| 14 | |

| J372 | |
|---|---|
| 1 | GND |
| 2 | RDB |
| 3 | TDB |
| 4 | CTS |
| 5 | RTS |
| 6 | |
| 7 | GND |
| 8 | |
| 9 | |
| 10 | |
| 11 | |
| 12 | |
| 13 | |
| 14 | +5V |
| 15 | |
| 16 | |
| 17 | |
| 18 | |
| 19 | |
| 20 | DCB |
| 21 | |
| 22 | |
| 23 | |
| 24 | |
| 25 | |

| J373 | |
|---|---|
| 1 | B1/ |
| 2 | STB |
| 3 | B2/ |
| 4 | |
| 5 | B3/ |
| 6 | +5V |
| 7 | B4/ |
| 8 | +5V |
| 9 | B5/ |
| 10 | GND |
| 11 | B6/ |
| 12 | GND |
| 13 | B7/ |
| 14 | GND |
| 15 | B8/ |
| 16 | GND |
| 17 | GND |
| 18 | GND |
| 19 | GND |
| 20 | GND |

| J374 | |
|---|---|
| 1 | PHSE L0 |
| 2 | PHSE L1 |
| 3 | R-R/ |
| 4 | R-R |
| 5 | |
| 6 | ECG SW/ |
| 7 | PCG SW/ |
| 8 | PL1 SW/ |
| 9 | PL2 SW/ |
| 10 | ECG LP |
| 11 | PCG LP |
| 12 | PL1 LP |
| 13 | PL2 LP |
| 14 | |
| 15 | GND |
| 16 | GND |

| J375 | | | |
|---|---|---|---|
| 1 | R-R/ | 21 | a6 |
| 2 | GND | 22 | GND |
| 3 | Tx | 23 | d0 |
| 4 | GND | 24 | GND |
| 5 | Rx | 25 | d1 |
| 6 | GND | 26 | GND |
| 7 | q | 27 | d2 |
| 8 | GND | 28 | GND |
| 9 | a0 | 29 | d3 |
| 10 | GND | 30 | GND |
| 11 | a1 | 31 | d4 |
| 12 | GND | 32 | GND |
| 13 | a2 | 33 | d5 |
| 14 | GND | 34 | GND |
| 15 | a3 | 35 | d6 |
| 16 | GND | 36 | GND |
| 17 | a4 | 37 | d7 |
| 18 | GND | 38 | GND |
| 19 | a5 | 39 | CPU AV/ |
| 20 | GND | 40 | |

| J376 | | | |
|---|---|---|---|
| 1 | +5V | 26 | C |
| 2 | +5V | 27 | L ON/OFF |
| 3 | GND | 28 | GND |
| 4 | PRB 1/2 | 29 | GND |
| 5 | PCD 101 | 30 | GND |
| 6 | PCD 102 | 31 | PCD 301 |
| 7 | PCD 103 | 32 | PCD 302 |
| 8 | PCD 104 | 33 | PCD 303 |
| 9 | PCD 105 | 34 | PCD 304 |
| 10 | PCD 106 | 35 | PCD 305 |
| 11 | PCD 107 | 36 | PCD 401 |
| 12 | PCD 108 | 37 | PCD 402 |
| 13 | PCD 201 | 38 | PCD 403 |
| 14 | PCD 202 | 39 | PCD 404 |
| 15 | PCD 203 | 40 | PCD 405 |
| 16 | PCD 204 | 41 | PCD 406 |
| 17 | PCD 205 | 42 | PCD 407 |
| 18 | PCD 206 | 43 | PCD 408 |
| 19 | PCD 207 | 44 | P.S 1 |
| 20 | PCD 208 | 45 | P.S 2 |
| 21 | PC 301 | 46 | P.P.B 3/4 |
| 22 | PC 302 | 47 | PCD 307 |
| 23 | PC 303 | 48 | PCD 308 |
| 24 | B 1/2 | 49 | +5V |
| 25 | PCD 306 | 50 | GND |

| J377 | |
|---|---|
| 1 | +5VA |
| 2 | +5VA |
| 3 | GND |
| 4 | −5VA |

| J378 | |
|---|---|
| 1 | SHUTTER |
| 2 | GND |

| J379 | |
|---|---|
| 1 | |
| 2 | |
| 3 | +15V |
| 4 | GND |
| 5 | GND |

| J381 | |
|---|---|
| 1 | B FRZ/ |
| 2 | GND |
| 3 | M FRZ/ |
| 4 | GND |
| 5 | CAMERA/ |
| 6 | GND |
| 7 | CP1 I/ |
| 8 | CP1 O |
| 9 | GND |
| 10 | CP2 I/ |
| 11 | CP2 O |
| 12 | GND |

| J385 | |
|---|---|
| 1 | +10V |
| 2 | +10V |
| 3 | A/D 3 |
| 4 | AGND |
| 5 | A/D 4 |

| J384 | |
|---|---|
| 1 | RL B0 |
| 2 | RL B1 |
| 3 | RL B2 |
| 4 | RL B3 |
| 5 | RL B4 |
| 6 | RL B5 |
| 7 | RL B6 |
| 8 | RL B7 |
| 9 | SEL B0 |
| 10 | SEL B1 |
| 11 | SEL B2 |
| 12 | SEL B3 |
| 13 | SEL B4 |
| 14 | SEL B5 |
| 15 | SEL B6 |
| 16 | SEL B7 |
| 17 | GND |
| 18 | GND |
| 19 | GND |
| 20 | GND |

| J386 | |
|---|---|
| 1 | −5V |
| 2 | +5V |
| 3 | +15V |
| 4 | GND |
| 5 | GND |
| 6 | GND |
| 7 | +10V |
| 8 | +5.1V |
| 9 | −15V |
| 10 | GND |
| 11 | GND |
| 12 | GND |
| 13 | |
| 14 | |
| 15 | |

| J382 | | | |
|---|---|---|---|
| 1 | +10V | 26 | LP 05 |
| 2 | +10V | 27 | LP 06 |
| 3 | +10V | 28 | LP 07 |
| 4 | +10V | 29 | LP 10 |
| 5 | RLA 0 | 30 | LP 11 |
| 6 | RLA 1 | 31 | LP 12 |
| 7 | RLA 2 | 32 | LP 13 |
| 8 | RLA 3 | 33 | LP 14 |
| 9 | RLA 4 | 34 | LP 15 |
| 10 | RLA 5 | 35 | LP 16 |
| 11 | RLA 6 | 36 | LP 17 |
| 12 | RLA 7 | 37 | LP 20 |
| 13 | SEL 0 | 38 | LP 21 |
| 14 | SEL 1 | 39 | LP 22 |
| 15 | SEL 2 | 40 | LP 23 |
| 16 | SEL 3 | 41 | LP 24 |
| 17 | SEL 4 | 42 | LP 25 |
| 18 | SEL 5 | 43 | LP 26 |
| 19 | SEL 6 | 44 | LP 27 |
| 20 | SEL 7 | 45 | LP 30 |
| 21 | LP 00 | 46 | LP 31 |
| 22 | LP 01 | 47 | LP 32 |
| 23 | LP 02 | 48 | LP 33 |
| 24 | LP 03 | 49 | LP 34 |
| 25 | LP 04 | 50 | LP 35 |

| J383 | | | |
|---|---|---|---|
| 1 | LP 36 | 26 | LP 67 |
| 2 | LP 37 | 27 | LP 70 |
| 3 | LP 40 | 28 | LP 71 |
| 4 | LP 41 | 29 | LP 72 |
| 5 | LP 42 | 30 | LP 73 |
| 6 | LP 43 | 31 | LP 74 |
| 7 | LP 44 | 32 | LP 75 |
| 8 | LP 45 | 33 | LP 76 |
| 9 | LP 46 | 34 | LP 77 |
| 10 | LP 47 | 35 | A/D 0 |
| 11 | LP 50 | 36 | A/D 1 |
| 12 | LP 51 | 37 | A/D 2 |
| 13 | LP 52 | 38 | AGND |
| 14 | LP 53 | 39 | AGND |
| 15 | LP 54 | 40 | AGND |
| 16 | LP 55 | 41 | +X |
| 17 | LP 56 | 42 | −X |
| 18 | LP 57 | 43 | +Y |
| 19 | LP 60 | 44 | −Y |
| 20 | LP 61 | 45 | FRZ 0 |
| 21 | LP 62 | 46 | FRZ 1 |
| 22 | LP 63 | 47 | +5V |
| 23 | LP 64 | 48 | +5V |
| 24 | LP 65 | 49 | GND |
| 25 | LP 66 | 50 | GND |

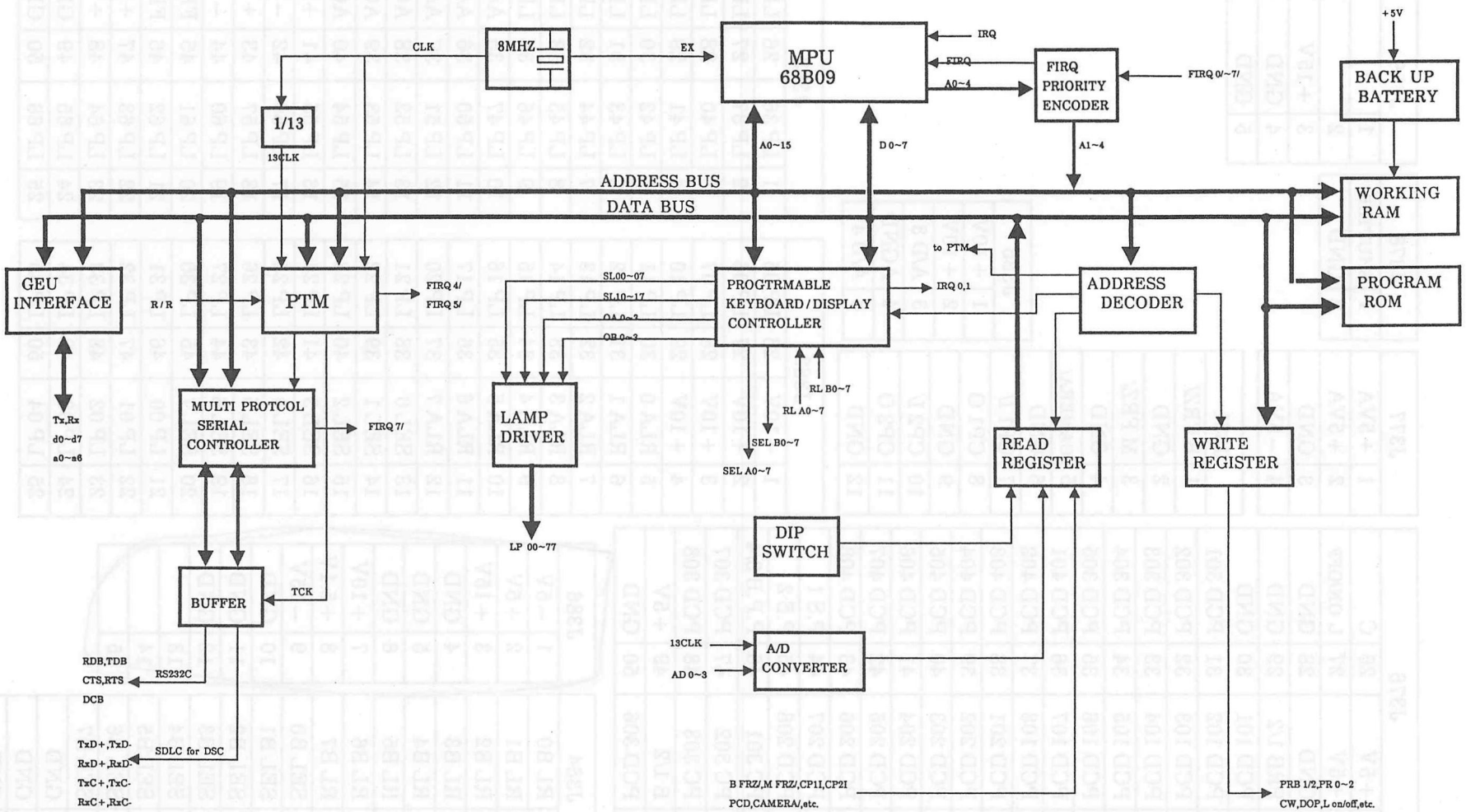


| | | | |
|---|---|---|---|
| Aloka | TITLE 名称<br>MAIN CONTROL | MODEL 形名<br>EP-3265 | 1/1 |

## 6-2 EP-3454 PROBE SELECTOR

(EP-3453 PROBE SELECT RELAY を含む)

この基板ではPROBE 1 , 2 の切換えを行っています。

EP-3454 SIGNAL LIST

| J100-1 | | |
|---|---|---|
| | A | B |
| 1 | A1 GND | A1 GND |
| 2 | A1 GND | A1 GND |
| 3 | PCD 101 | PS 1 |
| 4 | PCD 103 | PCD 102 |
| 5 | PCD 105 | PCD 104 |
| 6 | PCD 107 | PCD 106 |
| 7 | PCD 201 | PCD 108 |
| 8 | PCD 203 | PCD 202 |
| 9 | PCD 205 | PCD 204 |
| 10 | PCD 207 | PCD 206 |
| 11 | PC 303 | PCD 208 |
| 12 | PC 301 | PC 302 |
| 13 | +5VA | A1 GND |
| 14 | A GND | A GND |
| 15 | +5V | +5V |
| 16 | (+5.1V) | (+5.1V) |
| 17 | A GND | A GND |
| 18 | TX 87 | TX 88 |
| 19 | TX 39 | TX 40 |
| 20 | TX 85 | TX 86 |
| 21 | TX 37 | TX 38 |
| 22 | A GND | A GND |
| 23 | TX 84 | TX 96 |
| 24 | TX 36 | TX 48 |
| 25 | TX 83 | TX 95 |
| 26 | TX 35 | TX 47 |
| 27 | TX 82 | TX 94 |
| 28 | TX 34 | TX 46 |
| 29 | TX 81 | TX 92 |
| 30 | TX 33 | TX 45 |
| 31 | A GND | A GND |
| 32 | A GND | TX 92 |
| 33 | TX 120 | TX 44 |
| 34 | TX 72 | TX 91 |
| 35 | TX 24 | TX 43 |
| 36 | TX 119 | TX 90 |
| 37 | TX 71 | TX 42 |
| 38 | TX 23 | TX 89 |
| 39 | TX 118 | TX 41 |
| 40 | TX 70 | A GND |
| 41 | TX 22 | TX 80 |
| 42 | TX 117 | TX 32 |
| 43 | TX 69 | TX 79 |
| 44 | TX 21 | TX 31 |
| 45 | A GND | A GND |

| J100-2 | | |
|---|---|---|
| | A | B |
| 1 | A GND | A GND |
| 2 | PRB 1/2 | L ON/OFF |
| 3 | A GND | TX 78 |
| 4 | TX 116 | TX 30 |
| 5 | TX 68 | TX 77 |
| 6 | TX 20 | TX 29 |
| 7 | TX 115 | A GND |
| 8 | TX 67 | TX 76 |
| 9 | TX 19 | TX 28 |
| 10 | TX 114 | TX 75 |
| 11 | TX 66 | TX 27 |
| 12 | TX 18 | TX 74 |
| 13 | TX 113 | TX 26 |
| 14 | TX 65 | TX 73 |
| 15 | TX 17 | TX 25 |
| 16 | A GND | A GND |
| 17 | TX 104 | TX 112 |
| 18 | TX 56 | TX 64 |
| 19 | TX 8 | TX 16 |
| 20 | TX 103 | TX 111 |
| 21 | TX 55 | TX 63 |
| 22 | TX 7 | TX 15 |
| 23 | TX 102 | TX 110 |
| 24 | TX 54 | TX 62 |
| 25 | TX 6 | TX 14 |
| 26 | TX 101 | TX 109 |
| 27 | TX 53 | TX 61 |
| 28 | TX 5 | TX 13 |
| 29 | A GND | A GND |
| 30 | TX 100 | TX 108 |
| 31 | TX 52 | TX 60 |
| 32 | TX 4 | TX 12 |
| 33 | TX 99 | TX 107 |
| 34 | TX 51 | TX 59 |
| 35 | TX 3 | TX 11 |
| 36 | TX 98 | TX 106 |
| 37 | TX 50 | TX 58 |
| 38 | TX 2 | TX 10 |
| 39 | TX 97 | TX 105 |
| 40 | TX 49 | TX 57 |
| 41 | TX 1 | TX 9 |
| 42 | A GND | A GND |
| 43 | | |
| 44 | A GND | A GND |
| 45 | A GND | A GND |

EP-3454 SIGNAL LIST

| J3 | | | |
|---|---|---|---|
| 1 | Rx 9 | 26 | GND |
| 2 | GND | 27 | Rx 61 |
| 3 | Rx 57 | 28 | GND |
| 4 | GND | 29 | Rx 109 |
| 5 | Rx 105 | 30 | GND |
| 6 | GND | 31 | Rx 14 |
| 7 | Rx 10 | 32 | GND |
| 8 | GND | 33 | Rx 62 |
| 9 | Rx 58 | 34 | GND |
| 10 | GND | 35 | Rx 110 |
| 11 | Rx 106 | 36 | GND |
| 12 | GND | 37 | Rx 15 |
| 13 | Rx 11 | 38 | GND |
| 14 | GND | 39 | Rx 63 |
| 15 | Rx 59 | 40 | GND |
| 16 | GND | 41 | Rx 111 |
| 17 | Rx 107 | 42 | GND |
| 18 | GND | 43 | Rx 16 |
| 19 | Rx 12 | 44 | GND |
| 20 | GND | 45 | Rx 64 |
| 21 | Rx 60 | 46 | GND |
| 22 | GND | 47 | Rx 112 |
| 23 | Rx 108 | 48 | GND |
| 24 | GND | 49 | |
| 25 | Rx 13 | 50 | GND |

| J4 | | | |
|---|---|---|---|
| 1 | Rx 25 | 26 | GND |
| 2 | GND | 27 | Rx 79 |
| 3 | Rx 73 | 28 | GND |
| 4 | GND | 29 | Rx 32 |
| 5 | Rx 26 | 30 | GND |
| 6 | GND | 31 | Rx 80 |
| 7 | Rx 74 | 32 | GND |
| 8 | GND | 33 | Rx 33 |
| 9 | Rx 27 | 34 | GND |
| 10 | GND | 35 | Rx 81 |
| 11 | Rx 75 | 36 | GND |
| 12 | GND | 37 | Rx 34 |
| 13 | Rx 28 | 38 | GND |
| 14 | GND | 39 | Rx 82 |
| 15 | Rx 76 | 40 | GND |
| 16 | GND | 41 | Rx 35 |
| 17 | Rx 29 | 42 | GND |
| 18 | GND | 43 | Rx 83 |
| 19 | Rx 77 | 44 | GND |
| 20 | GND | 45 | Rx 36 |
| 21 | Rx 30 | 46 | GND |
| 22 | GND | 47 | Rx 84 |
| 23 | Rx 78 | 48 | GND |
| 24 | GND | 49 | |
| 25 | Rx 31 | 50 | GND |

| J5 | | | |
|---|---|---|---|
| 1 | Rx 37 | 26 | GND |
| 2 | GND | 27 | Rx 91 |
| 3 | Rx 85 | 28 | GND |
| 4 | GND | 29 | Rx 44 |
| 5 | Rx 38 | 30 | GND |
| 6 | GND | 31 | Rx 92 |
| 7 | Rx 86 | 32 | GND |
| 8 | GND | 33 | Rx 45 |
| 9 | Rx 39 | 34 | GND |
| 10 | GND | 35 | Rx 93 |
| 11 | Rx 87 | 36 | GND |
| 12 | GND | 37 | Rx 46 |
| 13 | Rx 40 | 38 | GND |
| 14 | GND | 39 | Rx 94 |
| 15 | Rx 88 | 40 | GND |
| 16 | GND | 41 | Rx 47 |
| 17 | Rx 41 | 42 | GND |
| 18 | GND | 43 | Rx 95 |
| 19 | Rx 89 | 44 | GND |
| 20 | GND | 45 | Rx 48 |
| 21 | Rx 42 | 46 | GND |
| 22 | GND | 47 | Rx 96 |
| 23 | Rx 90 | 48 | GND |
| 24 | GND | 49 | |
| 25 | Rx 43 | 50 | GND |

| J14 | |
|---|---|
| 1 | PCD 303 |
| 2 | PCD 302 |
| 3 | PCD 301 |
| 4 | GND |

| J11 (to Probe Connector 1) | |
|---|---|
| 1 | PCD 108 |
| 2 | PCD 107 |
| 3 | PCD 106 |
| 4 | PCD 105 |
| 5 | PCD 104 |
| 6 | PCD 103 |
| 7 | PCD 102 |
| 8 | PCD 101 |
| 9 | GND |

| J12 (to Probe Connector 1) | |
|---|---|
| 1 | PCD 208 |
| 2 | PCD 207 |
| 3 | PCD 206 |
| 4 | PCD 205 |
| 5 | PCD 204 |
| 6 | PCD 203 |
| 7 | PCD 202 |
| 8 | PCD 201 |
| 9 | GND |

| J13 (to Probe connector1&2) | |
|---|---|
| 1 | PRB 1 L OFF |
| 2 | GND |
| 3 | PRB 1 L ON |
| 4 | GND |
| 5 | PRB 2 L OFF |
| 6 | GND |
| 7 | PRB 2 L ON |
| 8 | GND |

EP-3454 SIGNAL LIST

for Probe Connector 1

to PB 1

| J11 (A1) | |
|---|---|
| 1 | V RTN |
| 2 | V RTN |
| 3 | PROBE 1 |
| 4 | PROBE 1 |
| 5 | A GND |
| 6 | A GND |

| J12 (B1) | |
|---|---|
| 1 | TX 106 |
| 2 | TX 107 |
| 3 | TX 93 |
| 4 | TX 92 |
| 5 | TX 91 |
| 6 | TX 108 |

| J13 (C1) | |
|---|---|
| 1 | TX 76 |
| 2 | TX 77 |
| 3 | TX 63 |
| 4 | TX 62 |
| 5 | TX 61 |
| 6 | TX 78 |

| J14 (D1) | |
|---|---|
| 1 | TX 46 |
| 2 | TX 47 |
| 3 | TX 33 |
| 4 | TX 32 |
| 5 | TX 31 |
| 6 | TX 48 |

| J15 (E1) | |
|---|---|
| 1 | TX 16 |
| 2 | TX 17 |
| 3 | TX 3 |
| 4 | TX 2 |
| 5 | TX 1 |
| 6 | TX 18 |

to PB 2

| J21 (A1) | |
|---|---|
| 1 | V RTN |
| 2 | V RTN |
| 3 | PROBE 1 |
| 4 | PROBE 1 |
| 5 | A GND |
| 6 | A GND |

| J22 (B1) | |
|---|---|
| 1 | TX 96 |
| 2 | TX 109 |
| 3 | TX 94 |
| 4 | TX 111 |
| 5 | TX 110 |
| 6 | TX 95 |

| J23 (C1) | |
|---|---|
| 1 | TX 66 |
| 2 | TX 79 |
| 3 | TX 64 |
| 4 | TX 81 |
| 5 | TX 80 |
| 6 | TX 65 |

| J24 (D1) | |
|---|---|
| 1 | TX 36 |
| 2 | TX 49 |
| 3 | TX 34 |
| 4 | TX 51 |
| 5 | TX 50 |
| 6 | TX 35 |

| J25 (E1) | |
|---|---|
| 1 | TX 6 |
| 2 | TX 19 |
| 3 | TX 4 |
| 4 | TX 21 |
| 5 | TX 20 |
| 6 | TX 5 |

to PB 3

| J31 (A1) | |
|---|---|
| 1 | V RTN |
| 2 | V RTN |
| 3 | PROBE 1 |
| 4 | PROBE 1 |
| 5 | A GND |
| 6 | A GND |

| J32 (B1) | |
|---|---|
| 1 | TX 99 |
| 2 | TX 112 |
| 3 | TX 97 |
| 4 | TX 114 |
| 5 | TX 113 |
| 6 | TX 98 |

| J33 (C1) | |
|---|---|
| 1 | TX 69 |
| 2 | TX 82 |
| 3 | TX 67 |
| 4 | TX 84 |
| 5 | TX 83 |
| 6 | TX 68 |

| J34 (D1) | |
|---|---|
| 1 | TX 39 |
| 2 | TX 52 |
| 3 | TX 37 |
| 4 | TX 54 |
| 5 | TX 53 |
| 6 | TX 38 |

| J35 (E1) | |
|---|---|
| 1 | TX 9 |
| 2 | TX 22 |
| 3 | TX 7 |
| 4 | TX 24 |
| 5 | TX 23 |
| 6 | TX 8 |

to PB 5

| J41 (A1) | |
|---|---|
| 1 | V RTN |
| 2 | V RTN |
| 3 | PROBE 1 |
| 4 | PROBE 1 |
| 5 | A GND |
| 6 | A GND |

| J42 (B1) | |
|---|---|
| 1 | TX 117 |
| 2 | TX 115 |
| 3 | TX 101 |
| 4 | TX 102 |
| 5 | TX 116 |
| 6 | TX 100 |

| J43 (C1) | |
|---|---|
| 1 | TX 87 |
| 2 | TX 85 |
| 3 | TX 71 |
| 4 | TX 72 |
| 5 | TX 86 |
| 6 | TX 70 |

| J44 (D1) | |
|---|---|
| 1 | TX 57 |
| 2 | TX 55 |
| 3 | TX 41 |
| 4 | TX 42 |
| 5 | TX 56 |
| 6 | TX 40 |

| J45 (E1) | |
|---|---|
| 1 | TX 27 |
| 2 | TX 25 |
| 3 | TX 11 |
| 4 | TX 12 |
| 5 | TX 26 |
| 6 | TX 10 |

to PB 6

| J51 (A1) | |
|---|---|
| 1 | V RTN |
| 2 | V RTN |
| 3 | PROBE 1 |
| 4 | PROBE 1 |
| 5 | A GND |
| 6 | A GND |

| J52 (B1) | |
|---|---|
| 1 | TX 104 |
| 2 | TX 105 |
| 3 | TX 120 |
| 4 | TX 103 |
| 5 | TX 118 |
| 6 | TX 119 |

| J53 (C1) | |
|---|---|
| 1 | TX 74 |
| 2 | TX 75 |
| 3 | TX 90 |
| 4 | TX 73 |
| 5 | TX 88 |
| 6 | TX 89 |

| J54 (D1) | |
|---|---|
| 1 | TX 44 |
| 2 | TX 45 |
| 3 | TX 60 |
| 4 | TX 43 |
| 5 | TX 58 |
| 6 | TX 59 |

| J55 (E1) | |
|---|---|
| 1 | TX 14 |
| 2 | TX 15 |
| 3 | TX 30 |
| 4 | TX 13 |
| 5 | TX 28 |
| 6 | TX 29 |

EP-3454 SIGNAL LIST

for Probe Connector 2

to PB 6

| | J11 (A1) | | J12 (B1) | | J13 (C1) | | J14 (D1) | | J15 (E1) |
|---|---|---|---|---|---|---|---|---|---|
| 1 | V RTN | 1 | TX 106 | 1 | TX 76 | 1 | TX 46 | 1 | TX 16 |
| 2 | V RTN | 2 | TX 107 | 2 | TX 77 | 2 | TX 47 | 2 | TX 17 |
| 3 | PROBE 2 | 3 | TX 93 | 3 | TX 63 | 3 | TX 33 | 3 | TX 3 |
| 4 | PROBE 2 | 4 | TX 92 | 4 | TX 62 | 4 | TX 32 | 4 | TX 2 |
| 5 | A GND | 5 | TX 91 | 5 | TX 61 | 5 | TX 31 | 5 | TX 1 |
| 6 | A GND | 6 | TX 108 | 6 | TX 78 | 6 | TX 48 | 6 | TX 18 |

to PB 7

| | J21 (A1) | | J22 (B1) | | J23 (C1) | | J24 (D1) | | J25 (E1) |
|---|---|---|---|---|---|---|---|---|---|
| 1 | V RTN | 1 | TX 96 | 1 | TX 66 | 1 | TX 36 | 1 | TX 6 |
| 2 | V RTN | 2 | TX 109 | 2 | TX 79 | 2 | TX 49 | 2 | TX 19 |
| 3 | PROBE 2 | 3 | TX 94 | 3 | TX 64 | 3 | TX 34 | 3 | TX 4 |
| 4 | PROBE 2 | 4 | TX 111 | 4 | TX 81 | 4 | TX 51 | 4 | TX 21 |
| 5 | A GND | 5 | TX 110 | 5 | TX 80 | 5 | TX 50 | 5 | TX 20 |
| 6 | A GND | 6 | TX 95 | 6 | TX 65 | 6 | TX 35 | 6 | TX 5 |

to PB 8

| | J31 (A1) | | J32 (B1) | | J33 (C1) | | J34 (D1) | | J35 (E1) |
|---|---|---|---|---|---|---|---|---|---|
| 1 | V RTN | 1 | TX 99 | 1 | TX 69 | 1 | TX 39 | 1 | TX 9 |
| 2 | V RTN | 2 | TX 112 | 2 | TX 82 | 2 | TX 52 | 2 | TX 22 |
| 3 | PROBE 2 | 3 | TX 97 | 3 | TX 67 | 3 | TX 37 | 3 | TX 7 |
| 4 | PROBE 2 | 4 | TX 114 | 4 | TX 84 | 4 | TX 54 | 4 | TX 24 |
| 5 | A GND | 5 | TX 113 | 5 | TX 83 | 5 | TX 53 | 5 | TX 23 |
| 6 | A GND | 6 | TX 98 | 6 | TX 68 | 6 | TX 38 | 6 | TX 8 |

to PB 9

| | J41 (A1) | | J42 (B1) | | J43 (C1) | | J44 (D1) | | J45 (E1) |
|---|---|---|---|---|---|---|---|---|---|
| 1 | V RTN | 1 | TX 117 | 1 | TX 87 | 1 | TX 57 | 1 | TX 27 |
| 2 | V RTN | 2 | TX 115 | 2 | TX 85 | 2 | TX 55 | 2 | TX 25 |
| 3 | PROBE 2 | 3 | TX 101 | 3 | TX 71 | 3 | TX 41 | 3 | TX 11 |
| 4 | PROBE 2 | 4 | TX 102 | 4 | TX 72 | 4 | TX 42 | 4 | TX 12 |
| 5 | A GND | 5 | TX 116 | 5 | TX 86 | 5 | TX 56 | 5 | TX 26 |
| 6 | A GND | 6 | TX 100 | 6 | TX 70 | 6 | TX 40 | 6 | TX 10 |

to PB 10

| | J51 (A1) | | J52 (B1) | | J53 (C1) | | J54 (D1) | | J55 (E1) |
|---|---|---|---|---|---|---|---|---|---|
| 1 | V RTN | 1 | TX 104 | 1 | TX 74 | 1 | TX 44 | 1 | TX 14 |
| 2 | V RTN | 2 | TX 105 | 2 | TX 75 | 2 | TX 45 | 2 | TX 15 |
| 3 | PROBE 2 | 3 | TX 120 | 3 | TX 90 | 3 | TX 60 | 3 | TX 30 |
| 4 | PROBE 2 | 4 | TX 103 | 4 | TX 73 | 4 | TX 43 | 4 | TX 13 |
| 5 | A GND | 5 | TX 118 | 5 | TX 88 | 5 | TX 58 | 5 | TX 28 |
| 6 | A GND | 6 | TX 119 | 6 | TX 89 | 6 | TX 59 | 6 | TX 29 |

EP-3453 SIGNAL LIST

to Probe Connector 1

| CN 11 | |
|---|---|
| 1 | # 108 |
| 2 | |
| 3 | # 106 |
| 4 | |
| 5 | # 93 |
| 6 | |
| 7 | # 91 |
| 8 | |
| 9 | # 107 |
| 10 | |
| 11 | G (to S1) |
| 12 | |
| 13 | # 92 |
| 14 | G (to P1) |

| CN 12 | |
|---|---|
| 1 | # 78 |
| 2 | |
| 3 | # 76 |
| 4 | |
| 5 | # 63 |
| 6 | |
| 7 | # 61 |
| 8 | |
| 9 | # 77 |
| 10 | |
| 11 | G (to L1) |
| 12 | |
| 13 | # 62 |
| 14 | G (to J1) |

| CN 13 | |
|---|---|
| 1 | # 48 |
| 2 | |
| 3 | # 46 |
| 4 | |
| 5 | # 33 |
| 6 | |
| 7 | # 31 |
| 8 | |
| 9 | # 47 |
| 10 | |
| 11 | G (to G1) |
| 12 | |
| 13 | # 32 |
| 14 | G (to E1) |

| CN 14 | |
|---|---|
| 1 | # 18 |
| 2 | |
| 3 | # 16 |
| 4 | |
| 5 | # 3 |
| 6 | |
| 7 | # 1 |
| 8 | |
| 9 | # 17 |
| 10 | |
| 11 | G (to C1) |
| 12 | |
| 13 | # 2 |
| 14 | G (to A1) |

| CN 21 | |
|---|---|
| 1 | # 111 |
| 2 | |
| 3 | # 109 |
| 4 | |
| 5 | # 96 |
| 6 | |
| 7 | # 94 |
| 8 | |
| 9 | # 120 |
| 10 | |
| 11 | G (to S3) |
| 12 | |
| 13 | # 96 |
| 14 | G (to P3) |

| CN 22 | |
|---|---|
| 1 | # 81 |
| 2 | |
| 3 | # 79 |
| 4 | |
| 5 | # 66 |
| 6 | |
| 7 | # 64 |
| 8 | |
| 9 | # 80 |
| 10 | |
| 11 | G (to L3) |
| 12 | |
| 13 | # 65 |
| 14 | G (to J3) |

| CN 23 | |
|---|---|
| 1 | # 51 |
| 2 | |
| 3 | # 49 |
| 4 | |
| 5 | # 36 |
| 6 | |
| 7 | # 34 |
| 8 | |
| 9 | # 50 |
| 10 | |
| 11 | G (to G3) |
| 12 | |
| 13 | # 35 |
| 14 | G (to E3) |

| CN 24 | |
|---|---|
| 1 | # 21 |
| 2 | |
| 3 | # 19 |
| 4 | |
| 5 | # 6 |
| 6 | |
| 7 | # 4 |
| 8 | |
| 9 | # 20 |
| 10 | |
| 11 | G (to C3) |
| 12 | |
| 13 | # 5 |
| 14 | G (to A3) |

| CN 31 | |
|---|---|
| 1 | # 114 |
| 2 | |
| 3 | # 112 |
| 4 | |
| 5 | # 99 |
| 6 | |
| 7 | # 97 |
| 8 | |
| 9 | # 113 |
| 10 | |
| 11 | G (to S5) |
| 12 | |
| 13 | # 98 |
| 14 | G (to P5) |

| CN 32 | |
|---|---|
| 1 | # 84 |
| 2 | |
| 3 | # 82 |
| 4 | |
| 5 | # 69 |
| 6 | |
| 7 | # 97 |
| 8 | |
| 9 | # 83 |
| 10 | |
| 11 | G (to L5) |
| 12 | |
| 13 | # 68 |
| 14 | G (to J5) |

| CN 33 | |
|---|---|
| 1 | # 54 |
| 2 | |
| 3 | # 52 |
| 4 | |
| 5 | # 39 |
| 6 | |
| 7 | # 37 |
| 8 | |
| 9 | # 53 |
| 10 | |
| 11 | G (to G5) |
| 12 | |
| 13 | # 38 |
| 14 | G (to E5) |

| CN 34 | |
|---|---|
| 1 | # 24 |
| 2 | |
| 3 | # 22 |
| 4 | |
| 5 | # 9 |
| 6 | |
| 7 | # 7 |
| 8 | |
| 9 | # 23 |
| 10 | |
| 11 | G (to C5) |
| 12 | |
| 13 | # 8 |
| 14 | G (to A5) |

EP-3453 SIGNAL LIST

to Probe Connector 1

| CN 41 | |
|---|---|
| 1 | # 117 |
| 2 | |
| 3 | # 115 |
| 4 | |
| 5 | # 102 |
| 6 | |
| 7 | # 100 |
| 8 | |
| 9 | # 106 |
| 10 | |
| 11 | G (to S7) |
| 12 | |
| 13 | # 101 |
| 14 | G (to P7) |

| CN 42 | |
|---|---|
| 1 | # 87 |
| 2 | |
| 3 | # 85 |
| 4 | |
| 5 | # 72 |
| 6 | |
| 7 | # 70 |
| 8 | |
| 9 | # 86 |
| 10 | |
| 11 | G (to L7) |
| 12 | |
| 13 | # 71 |
| 14 | G (to J7) |

| CN 43 | |
|---|---|
| 1 | # 57 |
| 2 | |
| 3 | # 55 |
| 4 | |
| 5 | # 42 |
| 6 | |
| 7 | # 40 |
| 8 | |
| 9 | # 56 |
| 10 | |
| 11 | G (to G7) |
| 12 | |
| 13 | # 41 |
| 14 | G (to E7) |

| CN 44 | |
|---|---|
| 1 | # 27 |
| 2 | |
| 3 | # 25 |
| 4 | |
| 5 | # 12 |
| 6 | |
| 7 | # 10 |
| 8 | |
| 9 | # 26 |
| 10 | |
| 11 | G (to C7) |
| 12 | |
| 13 | # 11 |
| 14 | G (to A7) |

| CN 51 | |
|---|---|
| 1 | # 120 |
| 2 | |
| 3 | # 118 |
| 4 | |
| 5 | # 105 |
| 6 | |
| 7 | # 103 |
| 8 | |
| 9 | # 119 |
| 10 | |
| 11 | G (to S9) |
| 12 | |
| 13 | # 104 |
| 14 | G (to P9) |

| CN 52 | |
|---|---|
| 1 | # 90 |
| 2 | |
| 3 | # 88 |
| 4 | |
| 5 | # 75 |
| 6 | |
| 7 | # 73 |
| 8 | |
| 9 | # 89 |
| 10 | |
| 11 | G (to L9) |
| 12 | |
| 13 | # 74 |
| 14 | G (to J9) |

| CN 53 | |
|---|---|
| 1 | # 60 |
| 2 | |
| 3 | # 58 |
| 4 | |
| 5 | # 45 |
| 6 | |
| 7 | # 43 |
| 8 | |
| 9 | # 59 |
| 10 | |
| 11 | G (to G9) |
| 12 | |
| 13 | # 44 |
| 14 | G (to E9) |

| CN 54 | |
|---|---|
| 1 | # 30 |
| 2 | |
| 3 | # 28 |
| 4 | |
| 5 | # 15 |
| 6 | |
| 7 | # 13 |
| 8 | |
| 9 | # 29 |
| 10 | |
| 11 | G (to C9) |
| 12 | |
| 13 | # 14 |
| 14 | G (to A9) |

EP-3453 SIGNAL LIST

| Probe Connector 1 | | | | | | | | | | |
|---|---|---|---|---|---|---|---|---|---|---|
| | 1 | 2 | 3 | 4 | 5 | 6 | 7 | 8 | 9 | 0 |
| A | G | #1 | G | #4 | G | #7 | G | #10 | G | #13 |
| B | #2 | #3 | #5 | #6 | #8 | #9 | #11 | #12 | #14 | #15 |
| C | G | #16 | G | #19 | G | #22 | G | #25 | G | #28 |
| D | #17 | #18 | #20 | #21 | #23 | #24 | #26 | #27 | #29 | #30 |
| E | G | #31 | G | #34 | G | #37 | G | #40 | G | #43 |
| F | #32 | #33 | #35 | #36 | #38 | #39 | #41 | #42 | #44 | #45 |
| G | G | #46 | G | #49 | G | #52 | G | #55 | G | #58 |
| H | #47 | #48 | #50 | #51 | #53 | #54 | #56 | #57 | #59 | #60 |
| J | G | #61 | G | #64 | G | #67 | G | #70 | G | #73 |
| K | #62 | #63 | #65 | #66 | #68 | #69 | #71 | #72 | #74 | #75 |
| L | G | #76 | G | #79 | G | #82 | G | #85 | G | #88 |
| M | #77 | #78 | #80 | #81 | #83 | #84 | #86 | #87 | #89 | #90 |
| N | L/ | L | | GL | GL | | LD | | | |
| P | G | #91 | G | #94 | G | #97 | G | #100 | G | #103 |
| R | #92 | #93 | #95 | #96 | #98 | #99 | #101 | #102 | #104 | #105 |
| S | G | #106 | G | #109 | G | #112 | G | #115 | G | #118 |
| T | #107 | #108 | #110 | #111 | #113 | #114 | #116 | #117 | #119 | #120 |
| U | | | | | | | | | | |
| V | | | | | | | | | | |
| W | | | | | | | | | | |
| X | | | | | | | | | | |
| Y | | | | | | | | | | |
| Z | | | | | | | | | | |
| a | | | | | | | | | | |
| b | | | | | | | | | | |
| c | PC18 | PC17 | PC16 | PC15 | PC14 | PC13 | PC12 | PC11 | GC (GND Common) | |

EP-3453 SIGNAL LIST

| | Probe Connector 2 | | | | | | | | | |
|---|---|---|---|---|---|---|---|---|---|---|
| | 1 | 2 | 3 | 4 | 5 | 6 | 7 | 8 | 9 | 0 |
| A | G | #1 | G | #4 | G | #7 | G | #10 | G | #13 |
| B | #2 | #3 | #5 | #6 | #8 | #9 | #11 | #12 | #14 | #15 |
| C | G | #16 | G | #19 | G | #22 | G | #25 | G | #28 |
| D | #17 | #18 | #20 | #21 | #23 | #24 | #26 | #27 | #29 | #30 |
| E | G | #31 | G | #34 | G | #37 | G | #40 | G | #43 |
| F | #32 | #33 | #35 | #36 | #38 | #39 | #41 | #42 | #44 | #45 |
| G | G | #46 | G | #49 | G | #52 | G | #55 | G | #58 |
| H | #47 | #48 | #50 | #51 | #53 | #54 | #56 | #57 | #59 | #60 |
| J | G | #61 | G | #64 | G | #67 | G | #70 | G | #73 |
| K | #62 | #63 | #65 | #66 | #68 | #69 | #71 | #72 | #74 | #75 |
| L | G | #76 | G | #79 | G | #82 | G | #85 | G | #88 |
| M | #77 | #78 | #80 | #81 | #83 | #84 | #86 | #87 | #89 | #90 |
| N | L/ | L | | GL | GL | | LD | | | |
| P | G | #91 | G | #94 | G | #97 | G | #100 | G | #103 |
| R | #92 | #93 | #95 | #96 | #98 | #99 | #101 | #102 | #104 | #105 |
| S | G | #106 | G | #109 | G | #112 | G | #115 | G | #118 |
| T | #107 | #108 | #110 | #111 | #113 | #114 | #116 | #117 | #119 | #120 |
| U | | | | | | | | | | |
| V | | | | | | | | | | |
| W | | | | | | | | | | |
| X | | | | | | | | | | |
| Y | | | | | | | | | | |
| Z | | | | | | | | | | |
| a | | | | | | | | | | |
| b | | | | | | | | | | |
| c | PC28 | PC27 | PC26 | PC25 | PC24 | PC23 | PC22 | PC21 | GC (GND Common) | |

EP-3453 SIGNAL LIST

to Probe Connector 2

| CN 11 | |
|---|---|
| 1 | # 108 |
| 2 | |
| 3 | # 106 |
| 4 | |
| 5 | # 93 |
| 6 | |
| 7 | # 91 |
| 8 | |
| 9 | # 107 |
| 10 | |
| 11 | G (to S1) |
| 12 | |
| 13 | # 92 |
| 14 | G (to P1) |

| CN 12 | |
|---|---|
| 1 | # 78 |
| 2 | |
| 3 | # 76 |
| 4 | |
| 5 | # 63 |
| 6 | |
| 7 | # 61 |
| 8 | |
| 9 | # 77 |
| 10 | |
| 11 | G (to L1) |
| 12 | |
| 13 | # 62 |
| 14 | G (to J1) |

| CN 13 | |
|---|---|
| 1 | # 48 |
| 2 | |
| 3 | # 46 |
| 4 | |
| 5 | # 33 |
| 6 | |
| 7 | # 31 |
| 8 | |
| 9 | # 47 |
| 10 | |
| 11 | G (to G1) |
| 12 | |
| 13 | # 32 |
| 14 | G (to E1) |

| CN 14 | |
|---|---|
| 1 | # 18 |
| 2 | |
| 3 | # 16 |
| 4 | |
| 5 | # 3 |
| 6 | |
| 7 | # 1 |
| 8 | |
| 9 | # 17 |
| 10 | |
| 11 | G (to C1) |
| 12 | |
| 13 | # 2 |
| 14 | G (to A1) |

| CN 21 | |
|---|---|
| 1 | # 111 |
| 2 | |
| 3 | # 109 |
| 4 | |
| 5 | # 96 |
| 6 | |
| 7 | # 94 |
| 8 | |
| 9 | # 120 |
| 10 | |
| 11 | G (to S3) |
| 12 | |
| 13 | # 96 |
| 14 | G (to P3) |

| CN 22 | |
|---|---|
| 1 | # 81 |
| 2 | |
| 3 | # 79 |
| 4 | |
| 5 | # 66 |
| 6 | |
| 7 | # 64 |
| 8 | |
| 9 | # 80 |
| 10 | |
| 11 | G (to L3) |
| 12 | |
| 13 | # 65 |
| 14 | G (to J3) |

| CN 23 | |
|---|---|
| 1 | # 51 |
| 2 | |
| 3 | # 49 |
| 4 | |
| 5 | # 36 |
| 6 | |
| 7 | # 34 |
| 8 | |
| 9 | # 50 |
| 10 | |
| 11 | G (to G3) |
| 12 | |
| 13 | # 35 |
| 14 | G (to E3) |

| CN 24 | |
|---|---|
| 1 | # 21 |
| 2 | |
| 3 | # 19 |
| 4 | |
| 5 | # 6 |
| 6 | |
| 7 | # 4 |
| 8 | |
| 9 | # 20 |
| 10 | |
| 11 | G (to C3) |
| 12 | |
| 13 | # 5 |
| 14 | G (to A3) |

| CN 31 | |
|---|---|
| 1 | # 114 |
| 2 | |
| 3 | # 112 |
| 4 | |
| 5 | # 99 |
| 6 | |
| 7 | # 97 |
| 8 | |
| 9 | # 113 |
| 10 | |
| 11 | G (to S5) |
| 12 | |
| 13 | # 98 |
| 14 | G (to P5) |

| CN 32 | |
|---|---|
| 1 | # 84 |
| 2 | |
| 3 | # 82 |
| 4 | |
| 5 | # 69 |
| 6 | |
| 7 | # 97 |
| 8 | |
| 9 | # 83 |
| 10 | |
| 11 | G (to L5) |
| 12 | |
| 13 | # 68 |
| 14 | G (to J5) |

| CN 33 | |
|---|---|
| 1 | # 54 |
| 2 | |
| 3 | # 52 |
| 4 | |
| 5 | # 39 |
| 6 | |
| 7 | # 37 |
| 8 | |
| 9 | # 53 |
| 10 | |
| 11 | G (to G5) |
| 12 | |
| 13 | # 38 |
| 14 | G (to E5) |

| CN 34 | |
|---|---|
| 1 | # 24 |
| 2 | |
| 3 | # 22 |
| 4 | |
| 5 | # 9 |
| 6 | |
| 7 | # 7 |
| 8 | |
| 9 | # 23 |
| 10 | |
| 11 | G (to C5) |
| 12 | |
| 13 | # 8 |
| 14 | G (to A5) |

EP-3453 SIGNAL LIST

to Probe Connector 2

| CN 41 | |
|---|---|
| 1 | # 117 |
| 2 | |
| 3 | # 115 |
| 4 | |
| 5 | # 102 |
| 6 | |
| 7 | # 100 |
| 8 | |
| 9 | # 106 |
| 10 | |
| 11 | G (to S7) |
| 12 | |
| 13 | # 101 |
| 14 | G (to P7) |

| CN 42 | |
|---|---|
| 1 | # 87 |
| 2 | |
| 3 | # 85 |
| 4 | |
| 5 | # 72 |
| 6 | |
| 7 | # 70 |
| 8 | |
| 9 | # 86 |
| 10 | |
| 11 | G (to L7) |
| 12 | |
| 13 | # 71 |
| 14 | G (to J7) |

| CN 43 | |
|---|---|
| 1 | # 57 |
| 2 | |
| 3 | # 55 |
| 4 | |
| 5 | # 42 |
| 6 | |
| 7 | # 40 |
| 8 | |
| 9 | # 56 |
| 10 | |
| 11 | G (to G7) |
| 12 | |
| 13 | # 41 |
| 14 | G (to E7) |

| CN 44 | |
|---|---|
| 1 | # 27 |
| 2 | |
| 3 | # 25 |
| 4 | |
| 5 | # 12 |
| 6 | |
| 7 | # 10 |
| 8 | |
| 9 | # 26 |
| 10 | |
| 11 | G (to C7) |
| 12 | |
| 13 | # 11 |
| 14 | G (to A7) |

| CN 51 | |
|---|---|
| 1 | # 120 |
| 2 | |
| 3 | # 118 |
| 4 | |
| 5 | # 105 |
| 6 | |
| 7 | # 103 |
| 8 | |
| 9 | # 119 |
| 10 | |
| 11 | G (to S9) |
| 12 | |
| 13 | # 104 |
| 14 | G (to P9) |

| CN 52 | |
|---|---|
| 1 | # 90 |
| 2 | |
| 3 | # 88 |
| 4 | |
| 5 | # 75 |
| 6 | |
| 7 | # 73 |
| 8 | |
| 9 | # 89 |
| 10 | |
| 11 | G (to L9) |
| 12 | |
| 13 | # 74 |
| 14 | G (to J9) |

| CN 53 | |
|---|---|
| 1 | # 60 |
| 2 | |
| 3 | # 58 |
| 4 | |
| 5 | # 45 |
| 6 | |
| 7 | # 43 |
| 8 | |
| 9 | # 59 |
| 10 | |
| 11 | G (to G9) |
| 12 | |
| 13 | # 44 |
| 14 | G (to E9) |

| CN 54 | |
|---|---|
| 1 | # 30 |
| 2 | |
| 3 | # 28 |
| 4 | |
| 5 | # 15 |
| 6 | |
| 7 | # 13 |
| 8 | |
| 9 | # 29 |
| 10 | |
| 11 | G (to C9) |
| 12 | |
| 13 | # 14 |
| 14 | G (to A9) |

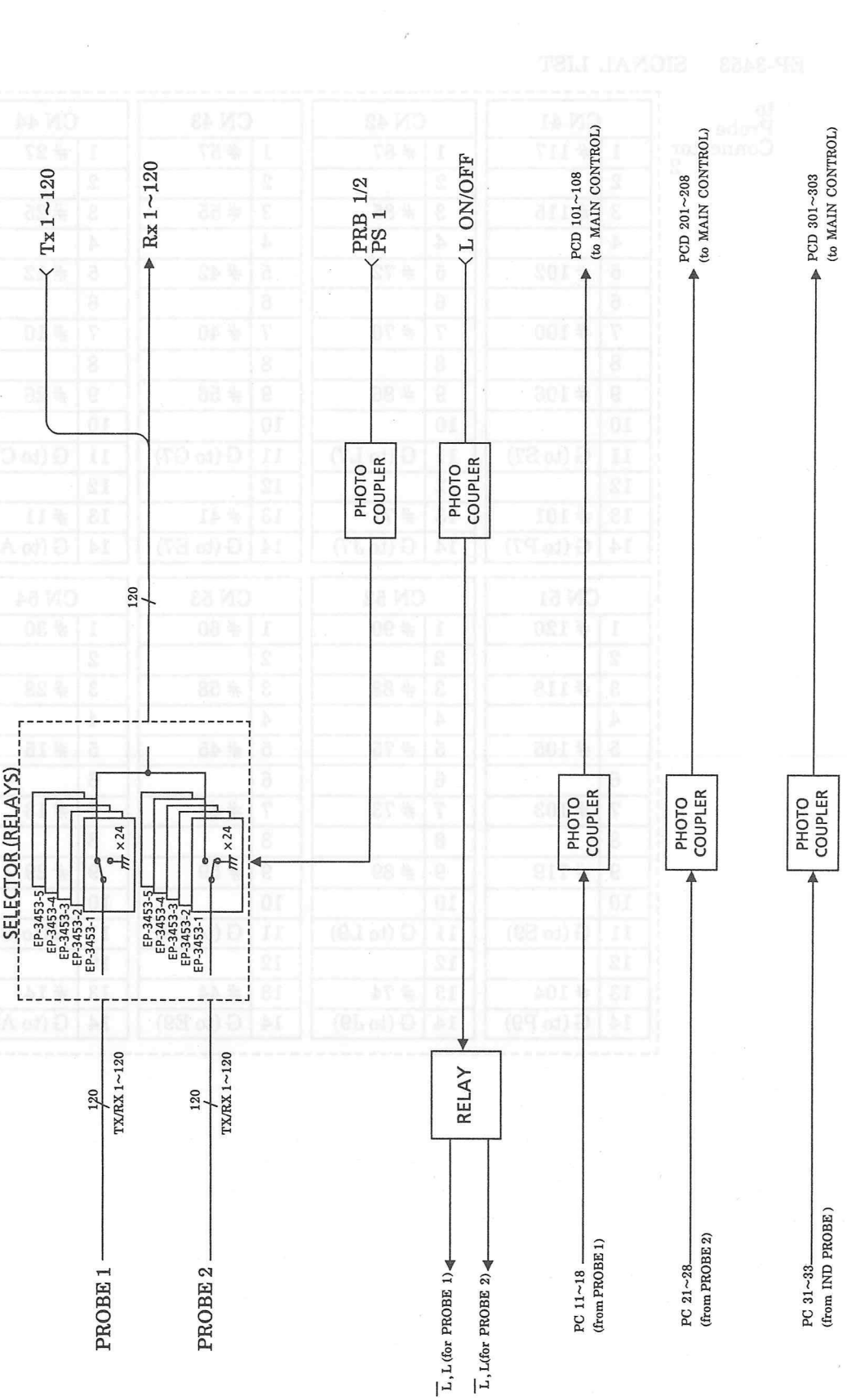


| Aloka | TITLE 名称 PROBE SELECTOR | MODEL 形名 EP-3454 | 1/1 |
|---|---|---|---|

EP-3453-1~5 各2枚づつ合計10枚のPCBはEP-3454にコネクタで接続されています。
10 PCBs, EP-3453-1~5 ×2, are mounted on one EP-3454 by the connectors.

## 6-3 EP-3455 RX SELECT

This PCB consists of the DAMPER circuit, the SELECTOR circuit for selecting 48 of 120 transducers total, and the SELECTOR CONTROL circuit.

### SIGNAL LIST

J101

| A | J1 | B |
|---|---|---|
| A GND | 45 | A GND |
| A GND | 44 | TX 21 |
| A GND | 43 | TX 69 |
| A GND | 42 | TX117 |
| A GND | 41 | TX 22 |
| A GND | 40 | TX 70 |
| A GND | 39 | TX118 |
| A GND | 38 | TX 23 |
| A GND | 37 | TX 71 |
| A GND | 36 | TX119 |
| A GND | 35 | TX 24 |
| A GND | 34 | TX 72 |
| A GND | 33 | TX120 |
| A GND | 32 | A GND |
| | 31 | |
| | 30 | |
| | 29 | |
| | 28 | |
| | 27 | |
| | 26 | |
| | 25 | |
| | 24 | |
| | 23 | |
| | 22 | |
| | 21 | |
| | 20 | |
| | 19 | |
| | 18 | |
| | 17 | |
| | 16 | |
| SLCK23 | 15 | SLCK22 |
| SLCK21 | 14 | SLCK20 |
| SLCK19 | 13 | SLCK18 |
| SLCK17 | 12 | SLCK16 |
| SLCK15 | 11 | SLCK14 |
| SLCK13 | 10 | SLCK12 |
| SEL 7 | 9 | SEL 6 |
| SEL 5 | 8 | SEL 4 |
| SEL 3 | 7 | SEL 2 |
| SEL 1 | 6 | SEL 0 |
| D/ | 5 | D/ |
| -5V | 4 | -5V |
| +5V | 3 | +5V |
| A GND | 2 | A GND |
| A GND | 1 | A GND |

J101

| A | J2 | B |
|---|---|---|
| A GND | 45 | A GND |
| A GND | 44 | A GND |
| +5V | 43 | +5V |
| A GND | 42 | A GND |
| A GND | 41 | TX 1 |
| A GND | 40 | TX 49 |
| A GND | 39 | TX 97 |
| A GND | 38 | TX 2 |
| A GND | 37 | TX 50 |
| A GND | 36 | TX 98 |
| A GND | 35 | TX 3 |
| A GND | 34 | TX 51 |
| A GND | 33 | TX 99 |
| A GND | 32 | TX 4 |
| A GND | 31 | TX 52 |
| A GND | 30 | TX100 |
| A GND | 29 | A GND |
| A GND | 28 | TX 5 |
| A GND | 27 | TX 53 |
| A GND | 26 | TX101 |
| A GND | 25 | TX 6 |
| A GND | 24 | TX 54 |
| A GND | 23 | TX102 |
| A GND | 22 | TX 7 |
| A GND | 21 | TX 55 |
| A GND | 20 | TX103 |
| A GND | 19 | TX 8 |
| A GND | 18 | TX 56 |
| A GND | 17 | TX104 |
| A GND | 16 | A GND |
| A GND | 15 | TX 17 |
| A GND | 14 | TX 65 |
| A GND | 13 | TX113 |
| A GND | 12 | TX 18 |
| A GND | 11 | TX 66 |
| A GND | 10 | TX114 |
| A GND | 9 | TX 19 |
| A GND | 8 | TX 67 |
| A GND | 7 | TX115 |
| A GND | 6 | TX 20 |
| A GND | 5 | TX 68 |
| A GND | 4 | TX116 |
| A GND | 3 | A GND |
| | 2 | |
| A GND | 1 | A GND |

| P3 | | | |
|---|---|---|---|
| 1 | Rx 9 | 26 | GND |
| 2 | GND | 27 | Rx 61 |
| 3 | Rx 57 | 28 | GND |
| 4 | GND | 29 | Rx 109 |
| 5 | Rx 105 | 30 | GND |
| 6 | GND | 31 | Rx 14 |
| 7 | Rx 10 | 32 | GND |
| 8 | GND | 33 | Rx 62 |
| 9 | Rx 58 | 34 | GND |
| 10 | GND | 35 | Rx 110 |
| 11 | Rx 106 | 36 | GND |
| 12 | GND | 37 | Rx 15 |
| 13 | Rx 11 | 38 | GND |
| 14 | GND | 39 | Rx 63 |
| 15 | Rx 59 | 40 | GND |
| 16 | GND | 41 | Rx 111 |
| 17 | Rx 107 | 42 | GND |
| 18 | GND | 43 | Rx 16 |
| 19 | Rx 12 | 44 | GND |
| 20 | GND | 45 | Rx 64 |
| 21 | Rx 60 | 46 | GND |
| 22 | GND | 47 | Rx 112 |
| 23 | Rx 108 | 48 | GND |
| 24 | GND | 49 | |
| 25 | Rx 13 | 50 | GND |

| P4 | | | |
|---|---|---|---|
| 1 | Rx 25 | 26 | GND |
| 2 | GND | 27 | Rx 79 |
| 3 | Rx 73 | 28 | GND |
| 4 | GND | 29 | Rx 32 |
| 5 | Rx 26 | 30 | GND |
| 6 | GND | 31 | Rx 80 |
| 7 | Rx 74 | 32 | GND |
| 8 | GND | 33 | Rx 33 |
| 9 | Rx 27 | 34 | GND |
| 10 | GND | 35 | Rx 81 |
| 11 | Rx 75 | 36 | GND |
| 12 | GND | 37 | Rx 34 |
| 13 | Rx 28 | 38 | GND |
| 14 | GND | 39 | Rx 82 |
| 15 | Rx 76 | 40 | GND |
| 16 | GND | 41 | Rx 35 |
| 17 | Rx 29 | 42 | GND |
| 18 | GND | 43 | Rx 83 |
| 19 | Rx 77 | 44 | GND |
| 20 | GND | 45 | Rx 36 |
| 21 | Rx 30 | 46 | GND |
| 22 | GND | 47 | Rx 84 |
| 23 | Rx 78 | 48 | GND |
| 24 | GND | 49 | |
| 25 | Rx 31 | 50 | GND |

| P5 | | | |
|---|---|---|---|
| 1 | Rx 37 | 26 | GND |
| 2 | GND | 27 | Rx 91 |
| 3 | Rx 85 | 28 | GND |
| 4 | GND | 29 | Rx 44 |
| 5 | Rx 38 | 30 | GND |
| 6 | GND | 31 | Rx 92 |
| 7 | Rx 86 | 32 | GND |
| 8 | GND | 33 | Rx 45 |
| 9 | Rx 39 | 34 | GND |
| 10 | GND | 35 | Rx 93 |
| 11 | Rx 87 | 36 | GND |
| 12 | GND | 37 | Rx 46 |
| 13 | Rx 40 | 38 | GND |
| 14 | GND | 39 | Rx 94 |
| 15 | Rx 88 | 40 | GND |
| 16 | GND | 41 | Rx 47 |
| 17 | Rx 41 | 42 | GND |
| 18 | GND | 43 | Rx 95 |
| 19 | Rx 89 | 44 | GND |
| 20 | GND | 45 | Rx 48 |
| 21 | Rx 42 | 46 | GND |
| 22 | GND | 47 | Rx 96 |
| 23 | Rx 90 | 48 | GND |
| 24 | GND | 49 | |
| 25 | Rx 43 | 50 | GND |

| J6 | | | |
|---|---|---|---|
| 1 | GND | 2 | REC 0 |
| 3 | GND | 4 | REC 1 |
| 5 | GND | 6 | REC 2 |
| 7 | GND | 8 | REC 3 |
| 9 | GND | 10 | REC 4 |
| 11 | GND | 12 | REC 5 |
| 13 | GND | 14 | REC 6 |
| 15 | GND | 16 | REC 7 |
| 17 | REC 8 | 18 | GND |
| 19 | REC 9 | 20 | GND |
| 21 | REC 10 | 22 | GND |
| 23 | REC 11 | 24 | GND |

| J7 | | | |
|---|---|---|---|
| 1 | REC 12 | 2 | GND |
| 3 | REC 13 | 4 | GND |
| 5 | REC 14 | 6 | GND |
| 7 | REC 15 | 8 | GND |
| 9 | GND | 10 | REC 16 |
| 11 | GND | 12 | REC 17 |
| 13 | GND | 14 | REC 18 |
| 15 | GND | 16 | REC 19 |
| 17 | GND | 18 | REC 20 |
| 19 | GND | 20 | REC 21 |
| 21 | GND | 22 | REC 22 |
| 23 | GND | 24 | REC 23 |

| J8 | | | |
|---|---|---|---|
| 1 | REC 24 | 2 | GND |
| 3 | REC 25 | 4 | GND |
| 5 | REC 26 | 6 | GND |
| 7 | REC 27 | 8 | GND |
| 9 | REC 28 | 10 | GND |
| 11 | REC 29 | 12 | GND |
| 13 | REC 30 | 14 | GND |
| 15 | REC 31 | 16 | GND |
| 17 | REC 32 | 18 | GND |
| 19 | REC 33 | 20 | GND |
| 21 | REC 34 | 22 | GND |
| 23 | REC 35 | 24 | GND |

| J9 | | | |
|---|---|---|---|
| 1 | REC 36 | 2 | GND |
| 3 | REC 37 | 4 | GND |
| 5 | REC 38 | 6 | GND |
| 7 | REC 39 | 8 | GND |
| 9 | REC 40 | 10 | GND |
| 11 | REC 41 | 12 | GND |
| 13 | REC 42 | 14 | GND |
| 15 | REC 43 | 16 | GND |
| 17 | REC 44 | 18 | GND |
| 19 | REC 45 | 20 | GND |
| 21 | REC 46 | 22 | GND |
| 23 | REC 47 | 24 | GND |

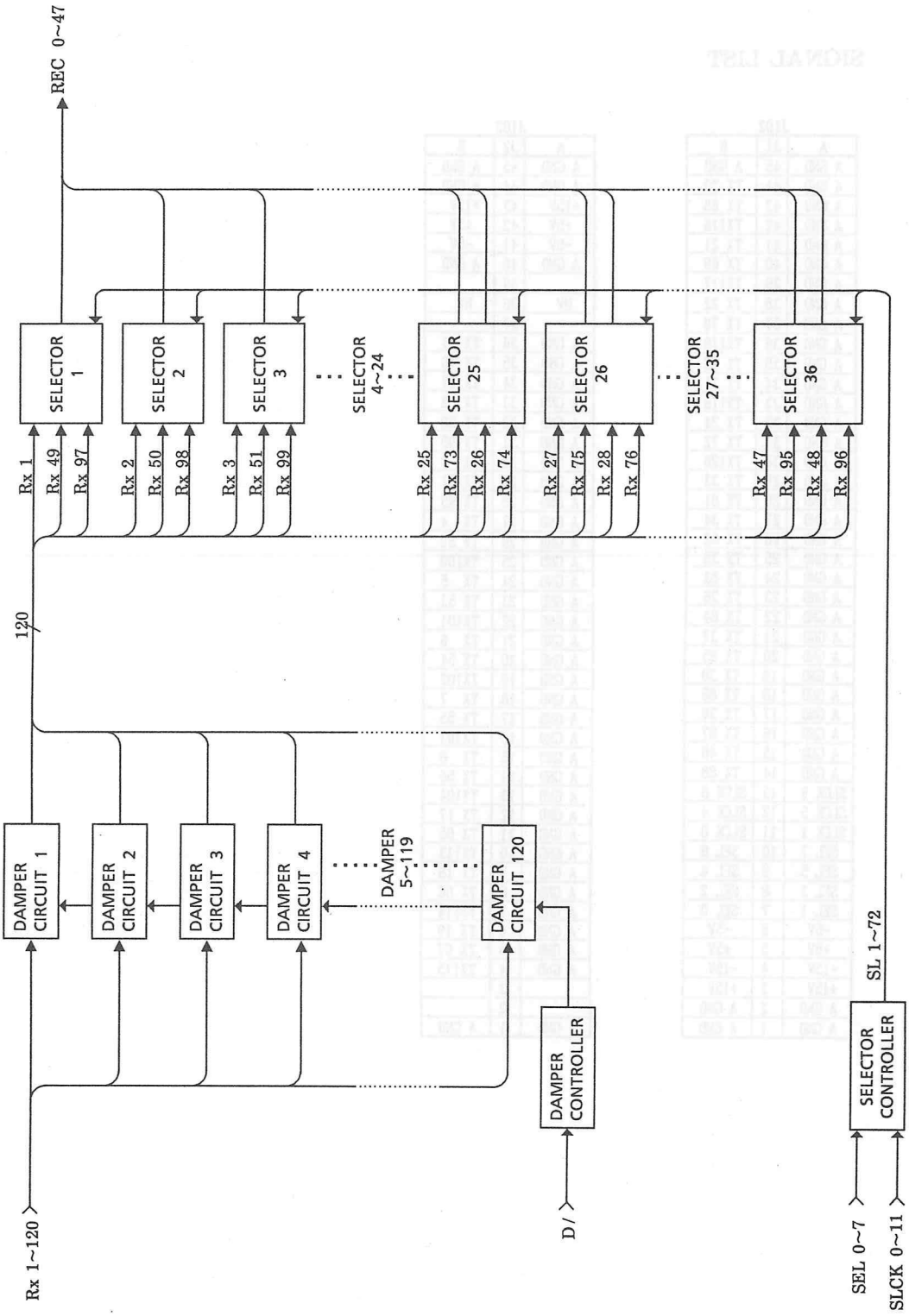


| Aloka | TITLE 名称 RX SELECT | MODEL 形名 EP-3455 | 1/1 |
|---|---|---|---|

## 6-4 EP-3456 TX1

One set of two PCBs, EP-3456(TX1) and EP-3457(TX2), consists of 120 transmission pulse generators for oscillating transducers.
EP-3456(TX1) has 64 transmitters.

### SIGNAL LIST

J102

| A | J1 | B |
|---|---|---|
| A GND | 45 | A GND |
| A GND | 44 | TX 20 |
| A GND | 43 | TX 68 |
| A GND | 42 | TX116 |
| A GND | 41 | TX 21 |
| A GND | 40 | TX 69 |
| A GND | 39 | TX117 |
| A GND | 38 | TX 22 |
| A GND | 37 | TX 70 |
| A GND | 36 | TX118 |
| A GND | 35 | TX 23 |
| A GND | 34 | TX 71 |
| A GND | 33 | TX119 |
| A GND | 32 | TX 24 |
| A GND | 31 | TX 72 |
| A GND | 30 | TX120 |
| A GND | 29 | TX 33 |
| A GND | 28 | TX 81 |
| A GND | 27 | TX 34 |
| A GND | 26 | TX 82 |
| A GND | 25 | TX 35 |
| A GND | 24 | TX 83 |
| A GND | 23 | TX 36 |
| A GND | 22 | TX 84 |
| A GND | 21 | TX 37 |
| A GND | 20 | TX 85 |
| A GND | 19 | TX 38 |
| A GND | 18 | TX 86 |
| A GND | 17 | TX 39 |
| A GND | 16 | TX 87 |
| A GND | 15 | TX 40 |
| A GND | 14 | TX 88 |
| SLCK 9 | 13 | SLCK 8 |
| SLCK 5 | 12 | SLCK 4 |
| SLCK 1 | 11 | SLCK 0 |
| SEL 7 | 10 | SEL 6 |
| SEL 5 | 9 | SEL 4 |
| SEL 3 | 8 | SEL 2 |
| SEL 1 | 7 | SEL 0 |
| -5V | 6 | -5V |
| +5V | 5 | +5V |
| -15V | 4 | -15V |
| +15V | 3 | +15V |
| A GND | 2 | A GND |
| A GND | 1 | A GND |

J102

| A | J2 | B |
|---|---|---|
| A GND | 45 | A GND |
| A GND | 44 | A GND |
| +15V | 43 | +15V |
| +5V | 42 | +5V |
| -5V | 41 | -5V |
| A GND | 40 | A GND |
| | 39 | |
| HV | 38 | HV |
| | 37 | |
| A GND | 36 | TX 1 |
| A GND | 35 | TX 49 |
| A GND | 34 | TX 97 |
| A GND | 33 | TX 2 |
| A GND | 32 | TX 50 |
| A GND | 31 | TX 98 |
| A GND | 30 | TX 3 |
| A GND | 29 | TX 51 |
| A GND | 28 | TX 99 |
| A GND | 27 | TX 4 |
| A GND | 26 | TX 52 |
| A GND | 25 | TX100 |
| A GND | 24 | TX 5 |
| A GND | 23 | TX 53 |
| A GND | 22 | TX101 |
| A GND | 21 | TX 6 |
| A GND | 20 | TX 54 |
| A GND | 19 | TX102 |
| A GND | 18 | TX 7 |
| A GND | 17 | TX 55 |
| A GND | 16 | TX103 |
| A GND | 15 | TX 8 |
| A GND | 14 | TX 56 |
| A GND | 13 | TX104 |
| A GND | 12 | TX 17 |
| A GND | 11 | TX 65 |
| A GND | 10 | TX113 |
| A GND | 9 | TX 18 |
| A GND | 8 | TX 66 |
| A GND | 7 | TX114 |
| A GND | 6 | TX 19 |
| A GND | 5 | TX 67 |
| A GND | 4 | TX115 |
| | 3 | |
| | 2 | |
| A GND | 1 | A GND |

| J3 | | | |
|---|---|---|---|
| 1 | | 2 | GND |
| 3 | TRIG 0 | 4 | GND |
| 5 | TRIG 1 | 6 | GND |
| 7 | TRIG 2 | 8 | GND |
| 9 | TRIG 3 | 10 | GND |
| 11 | TRIG 4 | 12 | GND |
| 13 | TRIG 5 | 14 | GND |
| 15 | TRIG 6 | 16 | GND |
| 17 | TRIG 7 | 18 | GND |
| 19 | TRIG 16 | 20 | GND |
| 21 | TRIG 17 | 22 | GND |
| 23 | TRIG 18 | 24 | GND |
| 25 | TRIG 19 | 26 | GND |
| 27 | TRIG 20 | 28 | GND |
| 29 | TRIG 21 | 29 | GND |
| 31 | TRIG 22 | 32 | GND |
| 33 | TRIG 23 | 34 | GND |
| 35 | TRIG 32 | 36 | GND |
| 37 | TRIG 33 | 38 | GND |
| 39 | TRIG 34 | 40 | GND |
| 41 | TRIG 35 | 42 | GND |
| 43 | TRIG 36 | 44 | GND |
| 45 | TRIG 37 | 46 | GND |
| 47 | TRIG 38 | 48 | GND |
| 49 | TRIG 39 | 50 | GND |

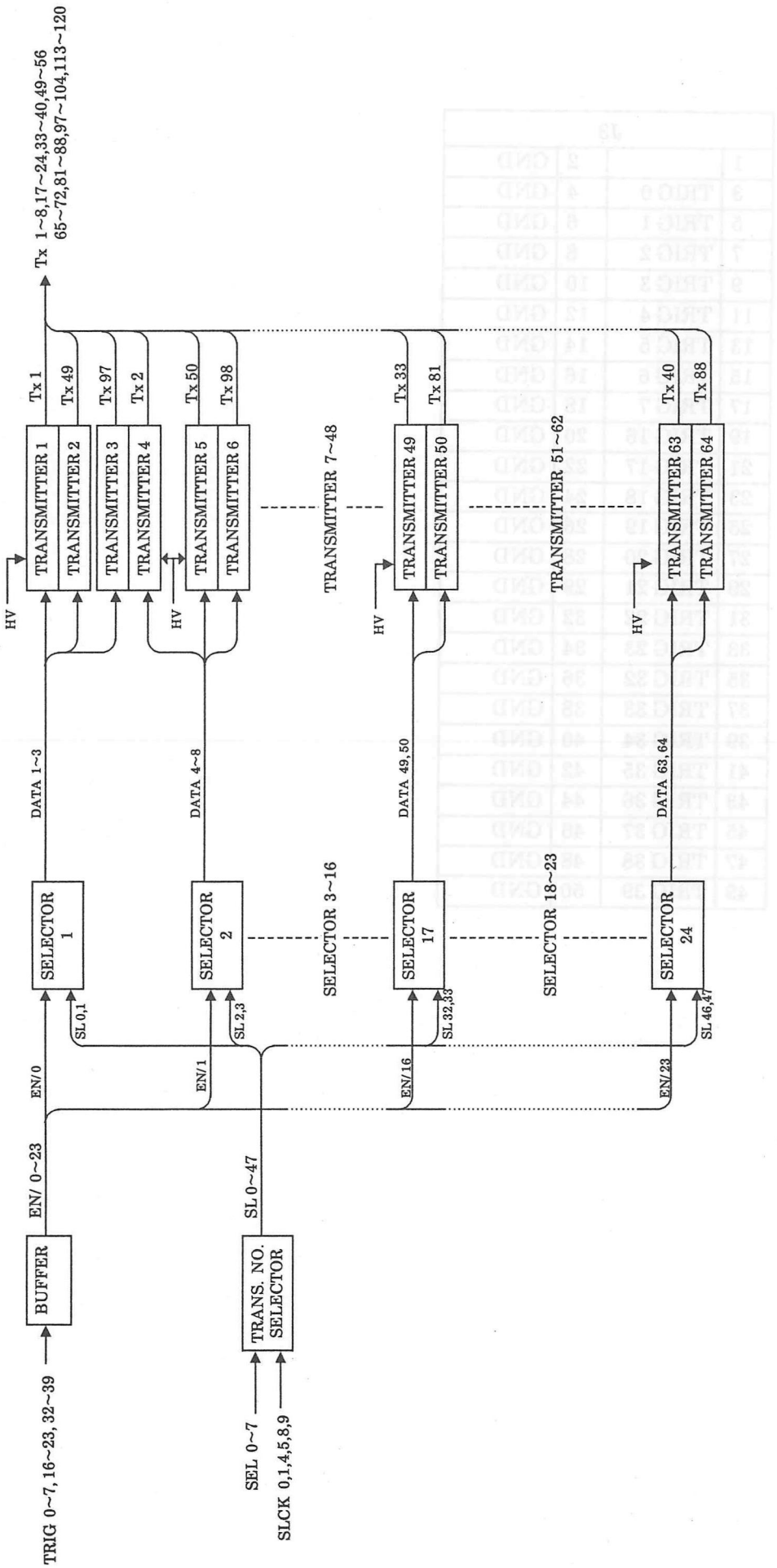


| Aloka | TITLE 名称 TX 1 | MODEL 形名 EP-3456 | 1/1 |
|---|---|---|---|

## 6-5 EP-3457 TX 2

One set of two PCBs, EP-3456(TX1) and EP-3457(TX2), consists of 120 transmission pulse generators for oscillating transducers.
EP-3457(TX2) has 56 transmitters.

### SIGNAL LIST

J103

| A | J1 | B |
|---|---|---|
| A GND | 45 | A GND |
| A GND | 44 | TX 77 |
| A GND | 43 | TX 30 |
| A GND | 42 | TX 78 |
| A GND | 41 | TX 31 |
| A GND | 40 | TX 79 |
| A GND | 39 | TX 32 |
| A GND | 38 | TX 80 |
| A GND | 37 | TX 41 |
| A GND | 36 | TX 89 |
| A GND | 35 | TX 42 |
| A GND | 34 | TX 90 |
| A GND | 33 | TX 43 |
| A GND | 32 | TX 91 |
| A GND | 31 | TX 44 |
| A GND | 30 | TX 92 |
| A GND | 29 | TX 45 |
| A GND | 28 | TX 93 |
| A GND | 27 | TX 46 |
| A GND | 26 | TX 94 |
| A GND | 25 | TX 47 |
| A GND | 24 | TX 95 |
| A GND | 23 | TX 48 |
| A GND | 22 | TX 96 |
| USBLK/ | 21 | S/L |
| FADRS 7 | 20 | FADRS 6 |
| FADRS 5 | 19 | FADRS 4 |
| FADRS 3 | 18 | FADRS 2 |
| FADRS 1 | 17 | FADRS 0 |
| SLCK11 | 16 | SLCK10 |
| SLCK 9 | 15 | SLCK 8 |
| SLCK 7 | 14 | SLCK 6 |
| SLCK 5 | 13 | SLCK 4 |
| SLCK 3 | 12 | SLCK 2 |
| SLCK 1 | 11 | SLCK 0 |
| SEL 7 | 10 | SEL 6 |
| SEL 5 | 9 | SEL 4 |
| SEL 3 | 8 | SEL 2 |
| SEL 1 | 7 | SEL 0 |
| -5V | 6 | -5V |
| +5V | 5 | +5V |
| -15V | 4 | -15V |
| +15V | 3 | +15V |
| A GND | 2 | A GND |
| A GND | 1 | A GND |

J103

| A | J2 | B |
|---|---|---|
| A GND | 45 | A GND |
| A GND | 44 | A GND |
| +15V | 43 | +15V |
| +5V | 42 | +5V |
| -5V | 41 | -5V |
| A GND | 40 | A GND |
| | 39 | |
| HV | 38 | HV |
| | 37 | |
| A GND | 36 | TX 9 |
| A GND | 35 | TX 57 |
| A GND | 34 | TX105 |
| A GND | 33 | TX 10 |
| A GND | 32 | TX 58 |
| A GND | 31 | TX106 |
| A GND | 30 | TX 11 |
| A GND | 29 | TX 59 |
| A GND | 28 | TX107 |
| A GND | 27 | TX 12 |
| A GND | 26 | TX 60 |
| A GND | 25 | TX108 |
| A GND | 24 | TX 13 |
| A GND | 23 | TX 61 |
| A GND | 22 | TX109 |
| A GND | 21 | TX 14 |
| A GND | 20 | TX 62 |
| A GND | 19 | TX110 |
| A GND | 18 | TX 15 |
| A GND | 17 | TX 63 |
| A GND | 16 | TX111 |
| A GND | 15 | TX 16 |
| A GND | 14 | TX 64 |
| A GND | 13 | TX112 |
| A GND | 12 | TX 25 |
| A GND | 11 | TX 73 |
| A GND | 10 | TX 26 |
| A GND | 9 | TX 74 |
| A GND | 8 | TX 27 |
| A GND | 7 | TX 75 |
| A GND | 6 | TX 28 |
| A GND | 5 | TX 76 |
| A GND | 4 | TX 29 |
| | 3 | |
| | 2 | |
| A GND | 1 | A GND |

| J3 | | | |
|---|---|---|---|
| 1 | | 2 | GND |
| 3 | TRIG 8 | 4 | GND |
| 5 | TRIG 9 | 6 | GND |
| 7 | TRIG 10 | 8 | GND |
| 9 | TRIG 11 | 10 | GND |
| 11 | TRIG 12 | 12 | GND |
| 13 | TRIG 13 | 14 | GND |
| 15 | TRIG 14 | 16 | GND |
| 17 | TRIG 15 | 18 | GND |
| 19 | TRIG 24 | 20 | GND |
| 21 | TRIG 25 | 22 | GND |
| 23 | TRIG 26 | 24 | GND |
| 25 | TRIG 27 | 26 | GND |
| 27 | TRIG 28 | 28 | GND |
| 29 | TRIG 29 | 29 | GND |
| 31 | TRIG 30 | 32 | GND |
| 33 | TRIG 31 | 34 | GND |
| 35 | TRIG 40 | 36 | GND |
| 37 | TRIG 41 | 38 | GND |
| 39 | TRIG 42 | 40 | GND |
| 41 | TRIG 43 | 42 | GND |
| 43 | TRIG 44 | 44 | GND |
| 45 | TRIG 45 | 46 | GND |
| 47 | TRIG 46 | 48 | GND |
| 49 | TRIG 47 | 50 | GND |

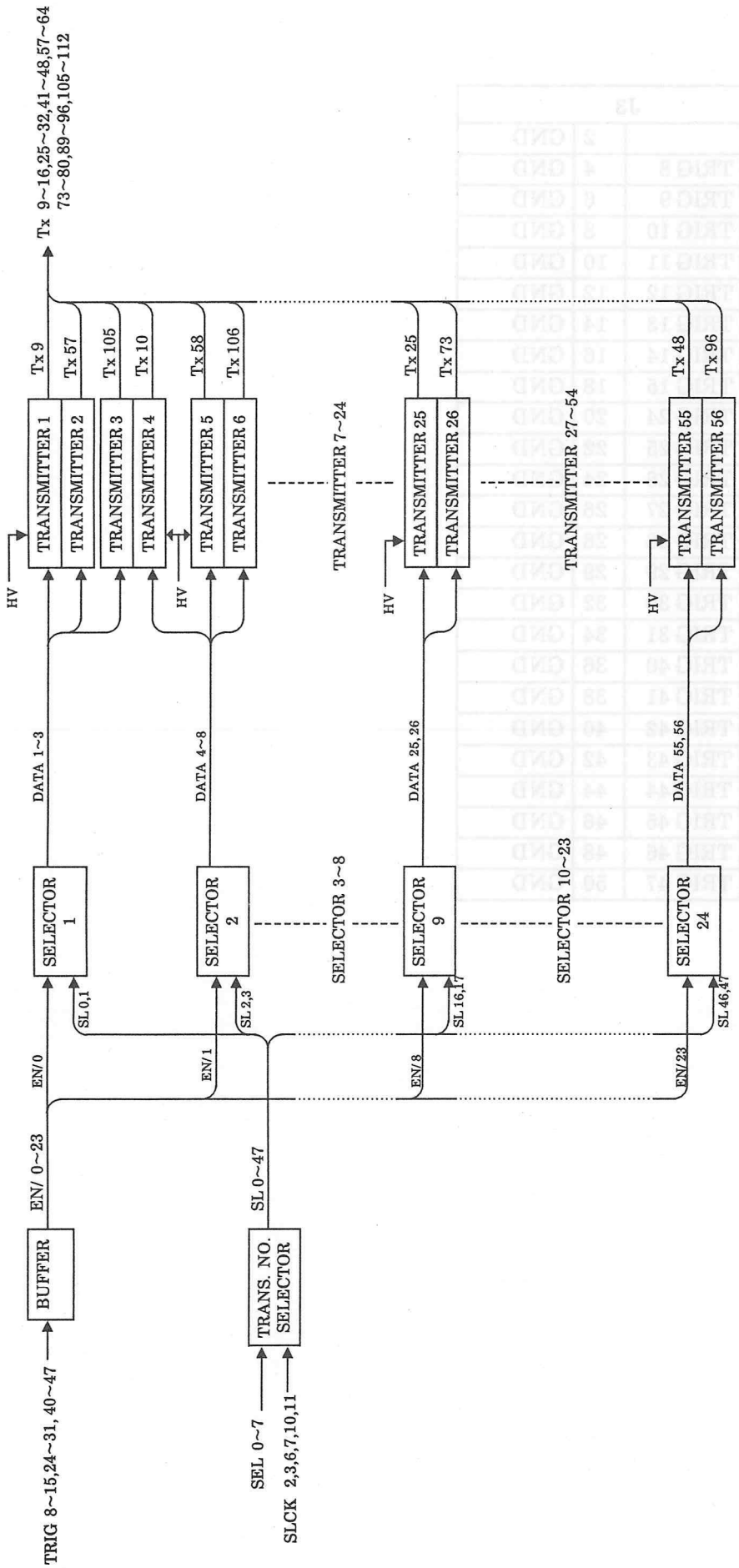


| Aloka | TITLE 名称 TX 2 | MODEL 形名 EP-3457 | 1/1 |
|---|---|---|---|

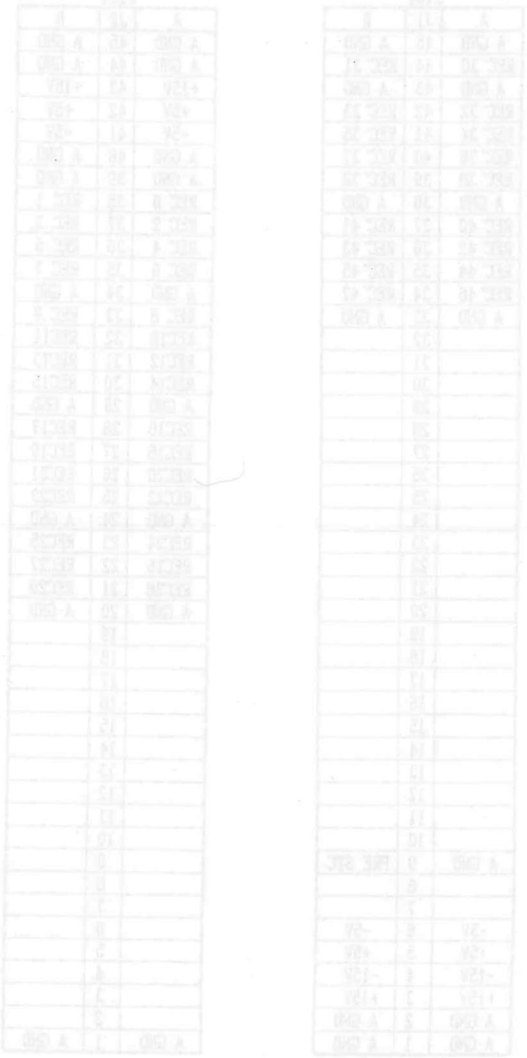

## 6-6 EP-3458 Pre AMP

It consists of 48 Pre Amp circuits.

SIGNAL LIST

J104

| A | J1 | B |
|---|---|---|
| A GND | 45 | A GND |
| REC' 30 | 44 | REC' 31 |
| A GND | 43 | A GND |
| REC' 32 | 42 | REC' 33 |
| REC' 34 | 41 | REC' 35 |
| REC' 36 | 40 | REC' 37 |
| REC' 38 | 39 | REC' 39 |
| A GND | 38 | A GND |
| REC' 40 | 37 | REC' 41 |
| REC' 42 | 36 | REC' 43 |
| REC' 44 | 35 | REC' 45 |
| REC' 46 | 34 | REC' 47 |
| A GND | 33 | A GND |
| | 32 | |
| | 31 | |
| | 30 | |
| | 29 | |
| | 28 | |
| | 27 | |
| | 26 | |
| | 25 | |
| | 24 | |
| | 23 | |
| | 22 | |
| | 21 | |
| | 20 | |
| | 19 | |
| | 18 | |
| | 17 | |
| | 16 | |
| | 15 | |
| | 14 | |
| | 13 | |
| | 12 | |
| | 11 | |
| | 10 | |
| A GND | 9 | PRE STC |
| | 8 | |
| | 7 | |
| -5V | 6 | -5V |
| +5V | 5 | +5V |
| -15V | 4 | -15V |
| +15V | 3 | +15V |
| A GND | 2 | A GND |
| A GND | 1 | A GND |

J104

| A | J2 | B |
|---|---|---|
| A GND | 45 | A GND |
| A GND | 44 | A GND |
| +15V | 43 | +15V |
| +5V | 42 | +5V |
| -5V | 41 | -5V |
| A GND | 40 | A GND |
| A GND | 39 | A GND |
| REC 0 | 38 | REC 1 |
| REC 2 | 37 | REC 3 |
| REC 4 | 36 | REC 5 |
| REC 6 | 35 | REC 7 |
| A GND | 34 | A GND |
| REC 8 | 33 | REC 9 |
| REC10 | 32 | REC11 |
| REC12 | 31 | REC13 |
| REC14 | 30 | REC15 |
| A GND | 29 | A GND |
| REC16 | 28 | REC17 |
| REC18 | 27 | REC19 |
| REC20 | 26 | REC21 |
| REC22 | 25 | REC23 |
| A GND | 24 | A GND |
| REC24 | 23 | REC25 |
| REC26 | 22 | REC27 |
| REC28 | 21 | REC29 |
| A GND | 20 | A GND |
| | 19 | |
| | 18 | |
| | 17 | |
| | 16 | |
| | 15 | |
| | 14 | |
| | 13 | |
| | 12 | |
| | 11 | |
| | 10 | |
| | 9 | |
| | 8 | |
| | 7 | |
| | 6 | |
| | 5 | |
| | 4 | |
| | 3 | |
| | 2 | |
| A GND | 1 | A GND |

| J3 | | | |
|---|---|---|---|
| 1 | GND | 2 | REC 0 |
| 3 | REC 23 | 4 | GND |
| 5 | GND | 6 | REC 1 |
| 7 | REC 22 | 8 | GND |
| 9 | GND | 10 | REC 2 |
| 11 | REC 21 | 12 | GND |
| 13 | GND | 14 | REC 3 |
| 15 | REC 20 | 16 | GND |
| 17 | GND | 18 | REC 4 |
| 19 | REC 16 | 20 | GND |
| 21 | GND | 22 | REC 5 |
| 23 | REC 18 | 24 | GND |

| J4 | | | |
|---|---|---|---|
| 1 | GND | 2 | REC 6 |
| 3 | REC 17 | 4 | GND |
| 5 | GND | 6 | REC 7 |
| 7 | REC 16 | 8 | GND |
| 9 | GND | 10 | REC 8 |
| 11 | REC 15 | 12 | GND |
| 13 | GND | 14 | REC 9 |
| 15 | REC 14 | 16 | GND |
| 17 | GND | 18 | REC 10 |
| 19 | REC 13 | 20 | GND |
| 21 | GND | 22 | REC 11 |
| 23 | REC 12 | 24 | GND |

| J5 | | | |
|---|---|---|---|
| 1 | GND | 2 | REC 24 |
| 3 | REC 47 | 4 | GND |
| 5 | GND | 6 | REC 25 |
| 7 | REC 46 | 8 | GND |
| 9 | GND | 10 | REC 26 |
| 11 | REC 45 | 12 | GND |
| 13 | GND | 14 | REC 27 |
| 15 | REC 44 | 16 | GND |
| 17 | GND | 18 | REC 28 |
| 19 | REC 43 | 20 | GND |
| 21 | GND | 22 | REC 29 |
| 23 | REC 42 | 24 | GND |

| J6 | | | |
|---|---|---|---|
| 1 | GND | 2 | REC 30 |
| 3 | REC 41 | 4 | GND |
| 5 | GND | 6 | REC 31 |
| 7 | REC 40 | 8 | GND |
| 9 | GND | 10 | REC 32 |
| 11 | REC 39 | 12 | GND |
| 13 | GND | 14 | REC 33 |
| 15 | REC 38 | 16 | GND |
| 17 | GND | 18 | REC 34 |
| 19 | REC 37 | 20 | GND |
| 21 | GND | 22 | REC 35 |
| 23 | REC 36 | 24 | GND |

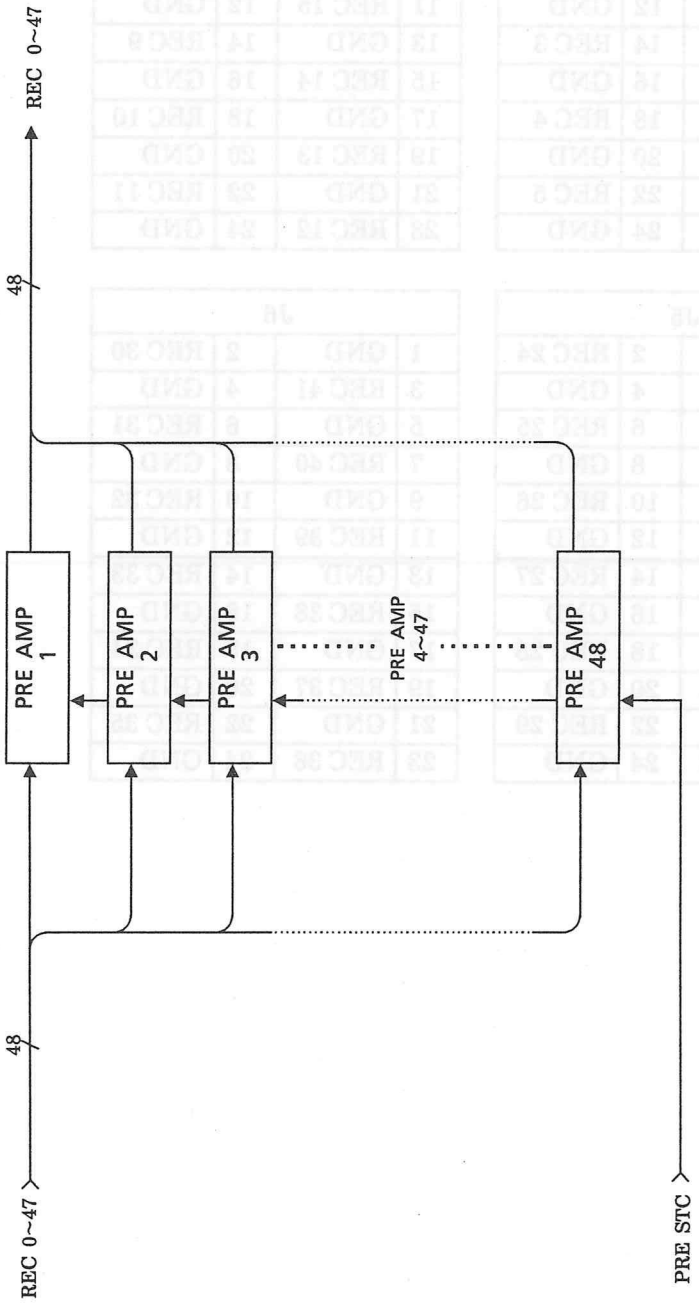


| | | | |
|---|---|---|---|
| Aloha | TITLE 名称 Pre AMP | MODEL 形名 EP-3458 | 1/1 |

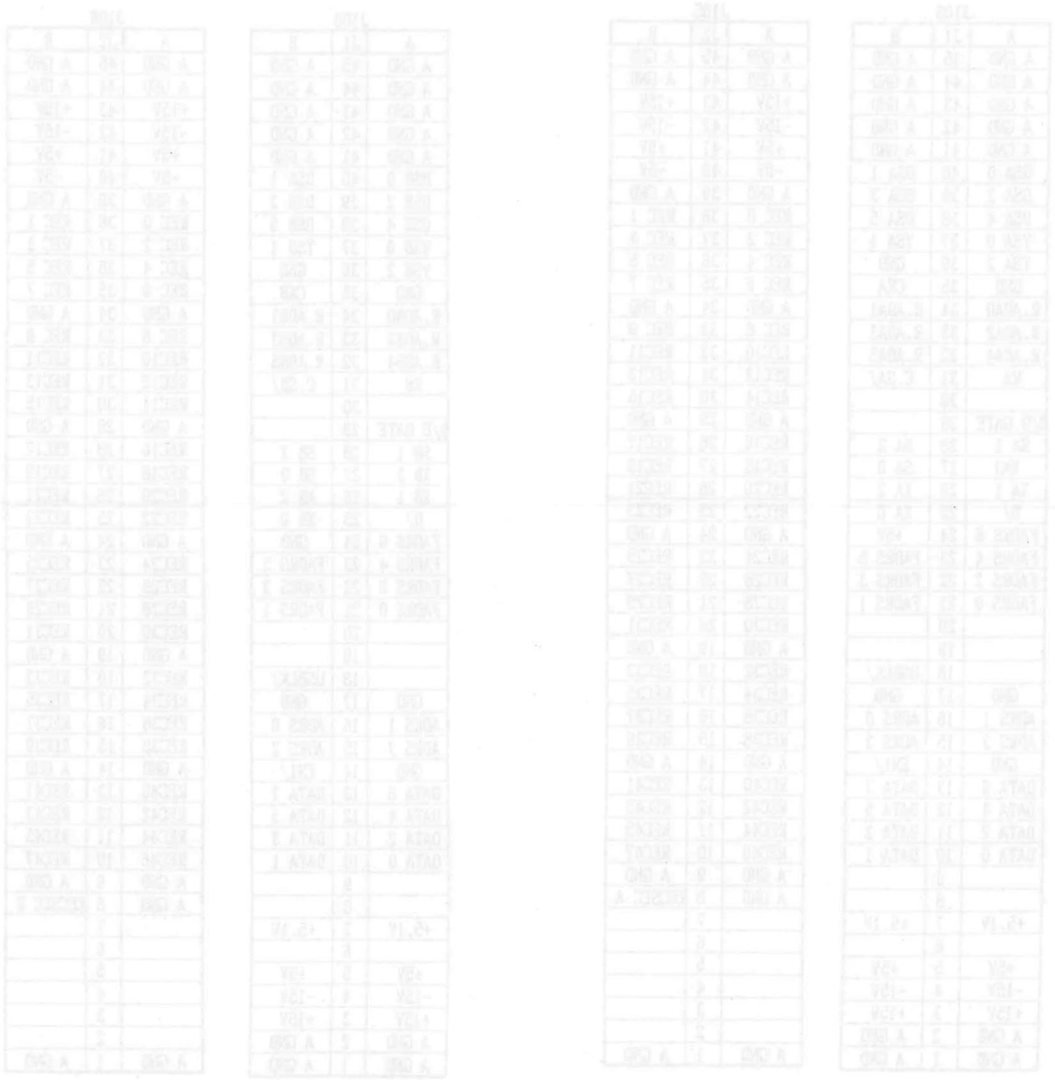

# 6-7 EP-3459 RX FOCUS

Two PCBs used for dynamic focus of received signal consist of five blocks, namely,
1) IN-VI-BUFFER, 2) MATRIX SWITCH and MATRIX SWITCH CONTROLLER,
3) DELAY-LINE, 4) VARIABLE BAND PASS FILTER, and 5) TRANSFORMER.

## SIGNAL LIST

J105

| A | J1 | B |
|---|---|---|
| A GND | 45 | A GND |
| A GND | 44 | A GND |
| A GND | 43 | A GND |
| A GND | 42 | A GND |
| A GND | 41 | A GND |
| DSA 0 | 40 | DSA 1 |
| DSA 2 | 39 | DSA 3 |
| DSA 4 | 38 | DSA 5 |
| YSA 0 | 37 | YSA 1 |
| YSA 2 | 36 | GND |
| GND | 35 | CKA |
| R.ADA0 | 34 | R.ADA1 |
| R.ADA2 | 33 | R.ADA3 |
| R.ADA4 | 32 | R.ADA5 |
| RA | 31 | C.SA/ |
| | 30 | |
| B/D GATE | 29 | |
| SA 1 | 28 | SA 2 |
| XA3 | 27 | SA 0 |
| XA 1 | 26 | XA 2 |
| D/ | 25 | XA 0 |
| FADRS 6 | 24 | +5V |
| FADRS 4 | 23 | FADRS 5 |
| FADRS 2 | 22 | FADRS 3 |
| FADRS 0 | 21 | FADRS 1 |
| | 20 | |
| | 19 | |
| | 18 | USBLK/ |
| GND | 17 | GND |
| ADRS 1 | 16 | ADRS 0 |
| ADRS 3 | 15 | ADRS 2 |
| GND | 14 | EN1/ |
| DATA 6 | 13 | DATA 7 |
| DATA 4 | 12 | DATA 5 |
| DATA 2 | 11 | DATA 3 |
| DATA 0 | 10 | DATA 1 |
| | 9 | |
| | 8 | |
| +5.1V | 7 | +5.1V |
| | 6 | |
| +5V | 5 | +5V |
| -15V | 4 | -15V |
| +15V | 3 | +15V |
| A GND | 2 | A GND |
| A GND | 1 | A GND |

J105

| A | J2 | B |
|---|---|---|
| A GND | 45 | A GND |
| A GND | 44 | A GND |
| +15V | 43 | +15V |
| -15V | 42 | -15V |
| +5V | 41 | +5V |
| -5V | 40 | -5V |
| A GND | 39 | A GND |
| REC 0 | 38 | REC 1 |
| REC 2 | 37 | REC 3 |
| REC 4 | 36 | REC 5 |
| REC 6 | 35 | REC 7 |
| A GND | 34 | A GND |
| REC 8 | 33 | REC 9 |
| REC10 | 32 | REC11 |
| REC12 | 31 | REC13 |
| REC14 | 30 | REC15 |
| A GND | 29 | A GND |
| REC16 | 28 | REC17 |
| REC18 | 27 | REC19 |
| REC20 | 26 | REC21 |
| REC22 | 25 | REC23 |
| A GND | 24 | A GND |
| REC24 | 23 | REC25 |
| REC26 | 22 | REC27 |
| REC28 | 21 | REC29 |
| REC30 | 20 | REC31 |
| A GND | 19 | A GND |
| REC32 | 18 | REC33 |
| REC34 | 17 | REC35 |
| REC36 | 16 | REC37 |
| REC38 | 15 | REC39 |
| A GND | 14 | A GND |
| REC40 | 13 | REC41 |
| REC42 | 12 | REC43 |
| REC44 | 11 | REC45 |
| REC46 | 10 | REC47 |
| A GND | 9 | A GND |
| A GND | 8 | RECSEC A |
| | 7 | |
| | 6 | |
| | 5 | |
| | 4 | |
| | 3 | |
| | 2 | |
| A GND | 1 | A GND |

J106

| A | J1 | B |
|---|---|---|
| A GND | 45 | A GND |
| A GND | 44 | A GND |
| A GND | 43 | A GND |
| A GND | 42 | A GND |
| A GND | 41 | A GND |
| DSB 0 | 40 | DSB 1 |
| DSB 2 | 39 | DSB 3 |
| DSB 4 | 38 | DSB 5 |
| YSB 0 | 37 | YSB 1 |
| YSB 2 | 36 | GND |
| GND | 35 | CKB |
| R.ADB0 | 34 | R.ADB1 |
| R.ADB2 | 33 | R.ADB3 |
| R.ADB4 | 32 | R.ADB5 |
| RB | 31 | C.SB/ |
| | 30 | |
| B/D GATE | 29 | |
| SB 1 | 28 | SB 2 |
| XB 3 | 27 | SB 0 |
| XB 1 | 26 | XB 2 |
| D/ | 25 | XB 0 |
| FADRS 6 | 24 | GND |
| FADRS 4 | 23 | FADRS 5 |
| FADRS 2 | 22 | FADRS 3 |
| FADRS 0 | 21 | FADRS 1 |
| | 20 | |
| | 19 | |
| | 18 | USBLK/ |
| GND | 17 | GND |
| ADRS 1 | 16 | ADRS 0 |
| ADRS 3 | 15 | ADRS 2 |
| GND | 14 | EN1/ |
| DATA 6 | 13 | DATA 7 |
| DATA 4 | 12 | DATA 5 |
| DATA 2 | 11 | DATA 3 |
| DATA 0 | 10 | DATA 1 |
| | 9 | |
| | 8 | |
| +5.1V | 7 | +5.1V |
| | 6 | |
| +5V | 5 | +5V |
| -15V | 4 | -15V |
| +15V | 3 | +15V |
| A GND | 2 | A GND |
| A GND | 1 | A GND |

J106

| A | J2 | B |
|---|---|---|
| A GND | 45 | A GND |
| A GND | 44 | A GND |
| +15V | 43 | +15V |
| -15V | 42 | -15V |
| +5V | 41 | +5V |
| -5V | 40 | -5V |
| A GND | 39 | A GND |
| REC 0 | 38 | REC 1 |
| REC 2 | 37 | REC 3 |
| REC 4 | 36 | REC 5 |
| REC 6 | 35 | REC 7 |
| A GND | 34 | A GND |
| REC 8 | 33 | REC 9 |
| REC10 | 32 | REC11 |
| REC12 | 31 | REC13 |
| REC14 | 30 | REC15 |
| A GND | 29 | A GND |
| REC16 | 28 | REC17 |
| REC18 | 27 | REC19 |
| REC20 | 26 | REC21 |
| REC22 | 25 | REC23 |
| A GND | 24 | A GND |
| REC24 | 23 | REC25 |
| REC26 | 22 | REC27 |
| REC28 | 21 | REC29 |
| REC30 | 20 | REC31 |
| A GND | 19 | A GND |
| REC32 | 18 | REC33 |
| REC34 | 17 | REC35 |
| REC36 | 16 | REC37 |
| REC38 | 15 | REC39 |
| A GND | 14 | A GND |
| REC40 | 13 | REC41 |
| REC42 | 12 | REC43 |
| REC44 | 11 | REC45 |
| REC46 | 10 | REC47 |
| A GND | 9 | A GND |
| A GND | 8 | RECSEC B |
| | 7 | |
| | 6 | |
| | 5 | |
| | 4 | |
| | 3 | |
| | 2 | |
| A GND | 1 | A GND |

## SIGNAL LIST

J107

| A | J1 | B |
|---|---|---|
| A GND | 45 | A GND |
| A GND | 44 | LINRF 2 |
| A GND | 43 | |
| | 42 | A GND |
| A GND | 41 | FOCONT |
| DSA 0 | 40 | DSA 1 |
| DSA 2 | 39 | DSA 3 |
| DSA 4 | 38 | DSA 5 |
| YSA 0 | 37 | YSA 1 |
| YSA 2 | 36 | GND |
| GND | 35 | CKA |
| R.ADA0 | 34 | R.ADA1 |
| R.ADA2 | 33 | R.ADA3 |
| R.ADA4 | 32 | R.ADA5 |
| RA | 31 | C.SA/ |
| AQ 0 | 30 | AQ 1 |
| B/D GATE | 29 | AQ 2 |
| SA 1 | 28 | SA 2 |
| XA 3 | 27 | SA 0 |
| XA 1 | 26 | XA 2 |
| D/ | 25 | XA 0 |
| FADRS 6 | 24 | +5V |
| FADRS 4 | 23 | FADRS 5 |
| FADRS 2 | 22 | FADRS 3 |
| FADRS 0 | 21 | FADRS 1 |
| EADRS 4 | 20 | EADRS 3 |
| EADRS 2 | 19 | EADRS 1 |
| EADRS 0 | 18 | USBLK/ |
| GND | 17 | GND |
| ADRS 1 | 16 | ADRS 0 |
| ADRS 3 | 15 | ADRS 2 |
| GND | 14 | EN1/ |
| DATA 6 | 13 | DATA 7 |
| DATA 4 | 12 | DATA 5 |
| DATA 2 | 11 | DATA 3 |
| DATA 0 | 10 | DATA 1 |
| RXECH 1 | 9 | RXECH 1/ |
| A GND | 8 | A GND |
| +5.1V | 7 | +5.1V |
| | 6 | |
| +5V | 5 | +5V |
| -15V | 4 | -15V |
| +15V | 3 | +15V |
| A GND | 2 | A GND |
| A GND | 1 | A GND |

J107

| A | J2 | B |
|---|---|---|
| A GND | 45 | A GND |
| A GND | 44 | A GND |
| +15V | 43 | +15V |
| -15V | 42 | -15V |
| +5V | 41 | +5V |
| -5V | 40 | -5V |
| A GND | 39 | A GND |
| REC 0 | 38 | REC 1 |
| REC 2 | 37 | REC 3 |
| REC 4 | 36 | REC 5 |
| REC 6 | 35 | REC 7 |
| A GND | 34 | A GND |
| REC 8 | 33 | REC 9 |
| REC10 | 32 | REC11 |
| REC12 | 31 | REC13 |
| REC14 | 30 | REC15 |
| A GND | 29 | A GND |
| REC16 | 28 | REC17 |
| REC18 | 27 | REC19 |
| REC20 | 26 | REC21 |
| REC22 | 25 | REC23 |
| A GND | 24 | A GND |
| REC24 | 23 | REC25 |
| REC26 | 22 | REC27 |
| REC28 | 21 | REC29 |
| REC30 | 20 | REC31 |
| A GND | 19 | A GND |
| REC32 | 18 | REC33 |
| REC34 | 17 | REC35 |
| REC36 | 16 | REC37 |
| REC38 | 15 | REC39 |
| A GND | 14 | A GND |
| REC40 | 13 | REC41 |
| REC42 | 12 | REC43 |
| REC44 | 11 | REC45 |
| REC46 | 10 | REC47 |
| A GND | 9 | A GND |
| A GND | 8 | RECSEC A |
| | 7 | |
| | 6 | |
| | 5 | |
| | 4 | |
| A GND | 3 | LINREC- |
| A GND | 2 | LINREC+ |
| A GND | 1 | A GND |

J108

| A | J1 | B |
|---|---|---|
| A GND | 45 | A GND |
| A GND | 44 | LINRF 1 |
| A GND | 43 | |
| | 42 | A GND |
| A GND | 41 | FOCONT |
| DSB 0 | 40 | DSB 1 |
| DSB 2 | 39 | DSB 3 |
| DSB 4 | 38 | DSB 5 |
| YSB 0 | 37 | YSB 1 |
| YSB 2 | 36 | GND |
| GND | 35 | CKB |
| R.ADB0 | 34 | R.ADB1 |
| R.ADB2 | 33 | R.ADB3 |
| R.ADB4 | 32 | R.ADB5 |
| RB | 31 | C.SB/ |
| BQ 0 | 30 | BQ 1 |
| B/D GATE | 29 | BQ 2 |
| SB 1 | 28 | SB 2 |
| XB 3 | 27 | SB 0 |
| XB 1 | 26 | XB 2 |
| D/ | 25 | XB 0 |
| FADRS 6 | 24 | GND |
| FADRS 4 | 23 | FADRS 5 |
| FADRS 2 | 22 | FADRS 3 |
| FADRS 0 | 21 | FADRS 1 |
| EADRS 4 | 20 | EADRS 3 |
| EADRS 2 | 19 | EADRS 1 |
| EADRS 0 | 18 | USBLK/ |
| GND | 17 | GND |
| ADRS 1 | 16 | ADRS 0 |
| ADRS 3 | 15 | ADRS 2 |
| GND | 14 | EN1/ |
| DATA 6 | 13 | DATA 7 |
| DATA 4 | 12 | DATA 5 |
| DATA 2 | 11 | DATA 3 |
| DATA 0 | 10 | DATA 1 |
| RXECH 0 | 9 | RXECH 0/ |
| A GND | 8 | A GND |
| +5.1V | 7 | +5.1V |
| | 6 | |
| +5V | 5 | +5V |
| -15V | 4 | -15V |
| +15V | 3 | +15V |
| A GND | 2 | A GND |
| A GND | 1 | A GND |

J108

| A | J2 | B |
|---|---|---|
| A GND | 45 | A GND |
| A GND | 44 | A GND |
| +15V | 43 | +15V |
| -15V | 42 | -15V |
| +5V | 41 | +5V |
| -5V | 40 | -5V |
| A GND | 39 | A GND |
| REC 0 | 38 | REC 1 |
| REC 2 | 37 | REC 3 |
| REC 4 | 36 | REC 5 |
| REC 6 | 35 | REC 7 |
| A GND | 34 | A GND |
| REC 8 | 33 | REC 9 |
| REC10 | 32 | REC11 |
| REC12 | 31 | REC13 |
| REC14 | 30 | REC15 |
| A GND | 29 | A GND |
| REC16 | 28 | REC17 |
| REC18 | 27 | REC19 |
| REC20 | 26 | REC21 |
| REC22 | 25 | REC23 |
| A GND | 24 | A GND |
| REC24 | 23 | REC25 |
| REC26 | 22 | REC27 |
| REC28 | 21 | REC29 |
| REC30 | 20 | REC31 |
| A GND | 19 | A GND |
| REC32 | 18 | REC33 |
| REC34 | 17 | REC35 |
| REC36 | 16 | REC37 |
| REC38 | 15 | REC39 |
| A GND | 14 | A GND |
| REC40 | 13 | REC41 |
| REC42 | 12 | REC43 |
| REC44 | 11 | REC45 |
| REC46 | 10 | REC47 |
| A GND | 9 | A GND |
| A GND | 8 | RECSEC B |
| | 7 | |
| | 6 | |
| | 5 | |
| | 4 | |
| A GND | 3 | LINREC- |
| A GND | 2 | LINREC+ |
| A GND | 1 | A GND |

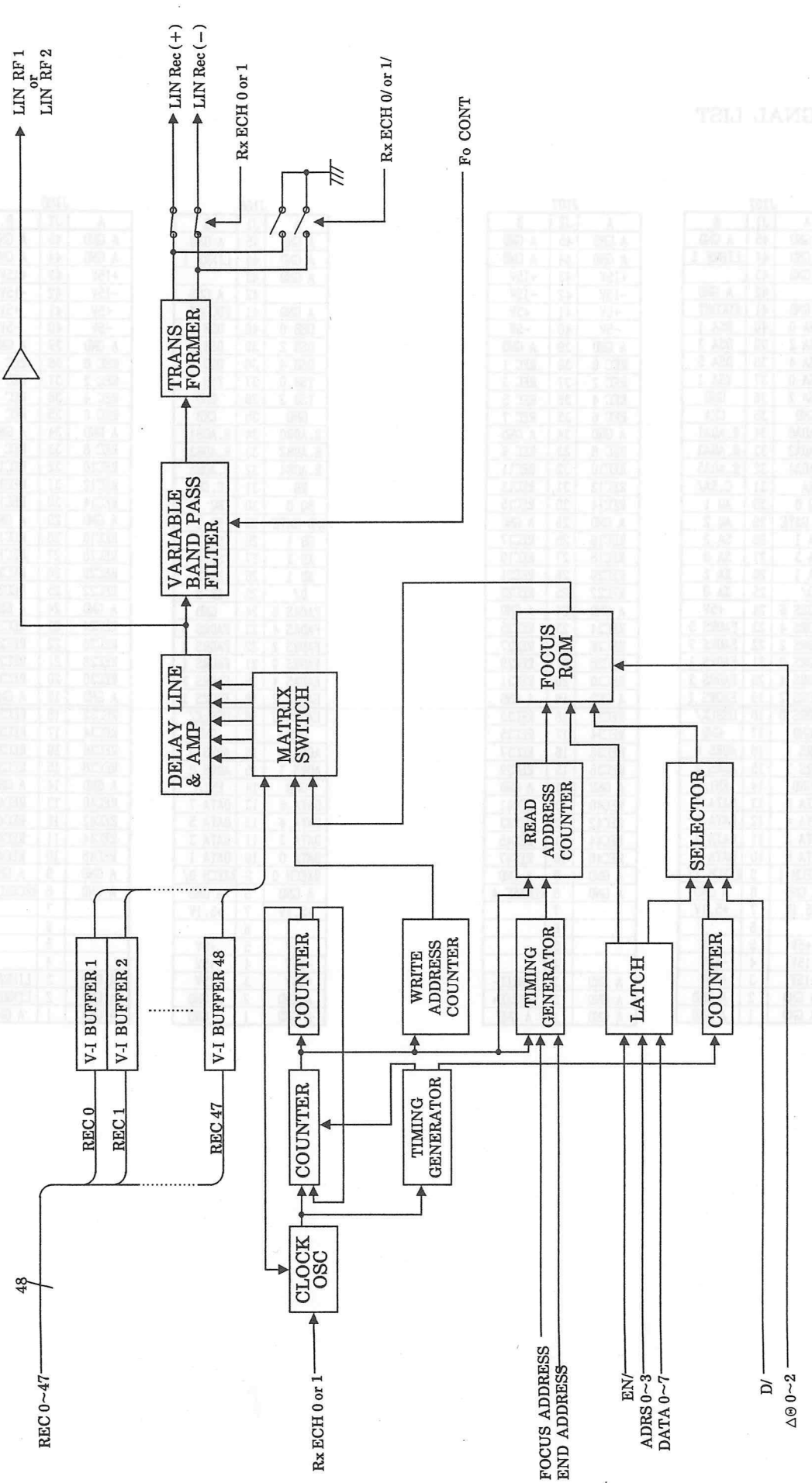


| Aloka | TITLE 名称 RX FOCUS | MODEL 形名 EP-3459 | 1/1 |
|---|---|---|---|

## 6-8 EP-3461 MAIN AMP & COLOR ITF

This PCB has the function of processing the signals received from the VBPF in the RX FOCUS (EP-3459) before sending the signals to the DSC, the function of selecting either color or PW doppler signal, and the COLOR ITF circuit converting the received signal into the signal which COLOR FLOW PROCESSOR board (EP-5100) needs.

SIGNAL LIST

J109

| A | J1 | B |
|---|---|---|
| A GND | 45 | A GND |
| A GND | 44 | LINRF 1 |
| A GND | 43 | LINRF 2 |
| | 42 | A GND |
| A GND | 41 | |
| | 40 | ECHANGE |
| | 39 | VIDCODE1 |
| | 38 | |
| | 37 | |
| | 36 | |
| | 35 | B/D GATE |
| | 34 | |
| FLGAIN7 | 33 | FLGAIN6 |
| FLGAIN5 | 32 | FLGAIN4 |
| FLGAIN3 | 31 | FLGAIN2 |
| FLGAIN1 | 30 | FLGAIN0 |
| | 29 | LIN/ |
| | 28 | |
| | 27 | |
| | 26 | |
| | 25 | |
| | 24 | |
| | 23 | |
| | 22 | |
| | 21 | |
| | 20 | |
| | 19 | |
| | 18 | |
| | 17 | |
| | 16 | |
| ⚠ | 15 | |
| o.r GATE | 14 | |
| ↘ | 13 | |
| ~~USBLK~~ | 12 | |
| | 11 | |
| GND | 10 | GND |
| CAR 0 | 9 | CAR 1 |
| DMCK | 8 | DMCK/ |
| GND | 7 | GND |
| -5V | 6 | -5V |
| +5V | 5 | +5V |
| -15V | 4 | -15V |
| +15V | 3 | +15V |
| A GND | 2 | A GND |
| A GND | 1 | A GND |

J109

| A | J2 | B |
|---|---|---|
| A GND | 45 | A GND |
| A GND | 44 | A GND |
| +15V | 43 | +15V |
| -15V | 42 | -15V |
| +5V | 41 | +5V |
| -5V | 40 | -5V |
| | 39 | |
| | 38 | |
| | 37 | |
| | 36 | |
| | 35 | |
| | 34 | |
| | 33 | |
| | 32 | |
| | 31 | |
| | 30 | |
| | 29 | |
| GND | 28 | AGCSIG |
| GND | 27 | FTCON/ |
| | 26 | |
| | 25 | |
| | 24 | |
| GND | 23 | GAINCONT |
| | 22 | L/S |
| | 21 | |
| | 20 | |
| | 19 | |
| GND | 18 | AGCON/ |
| GND | 17 | REL 0 |
| GND | 16 | REL 1 |
| GND | 15 | CONT 0 |
| GND | 14 | CONT 1 |
| GND | 13 | CONT 2 |
| GND | 12 | |
| | 11 | |
| | 10 | |
| | 9 | |
| A GND | 8 | A GND |
| | 7 | |
| | 6 | |
| | 5 | |
| | 4 | |
| A GND | 3 | LINREC- |
| A GND | 2 | LINREC+ |
| A GND | 1 | A GND |

J140 → CW DOPPLER

J147 → P(f) DOPPLER

| J141 | |
|---|---|
| 1 | RF OUT(−) |
| 2 | GND |
| 3 | RF OUT(+) |
| 4 | GND |

| J146 | |
|---|---|
| 1 | GND |
| 2 | DSC VIDEO |

| J160 | |
|---|---|
| 1 | COLOR SIN |
| 2 | GND |
| 3 | COLOR COS |
| 4 | GND |

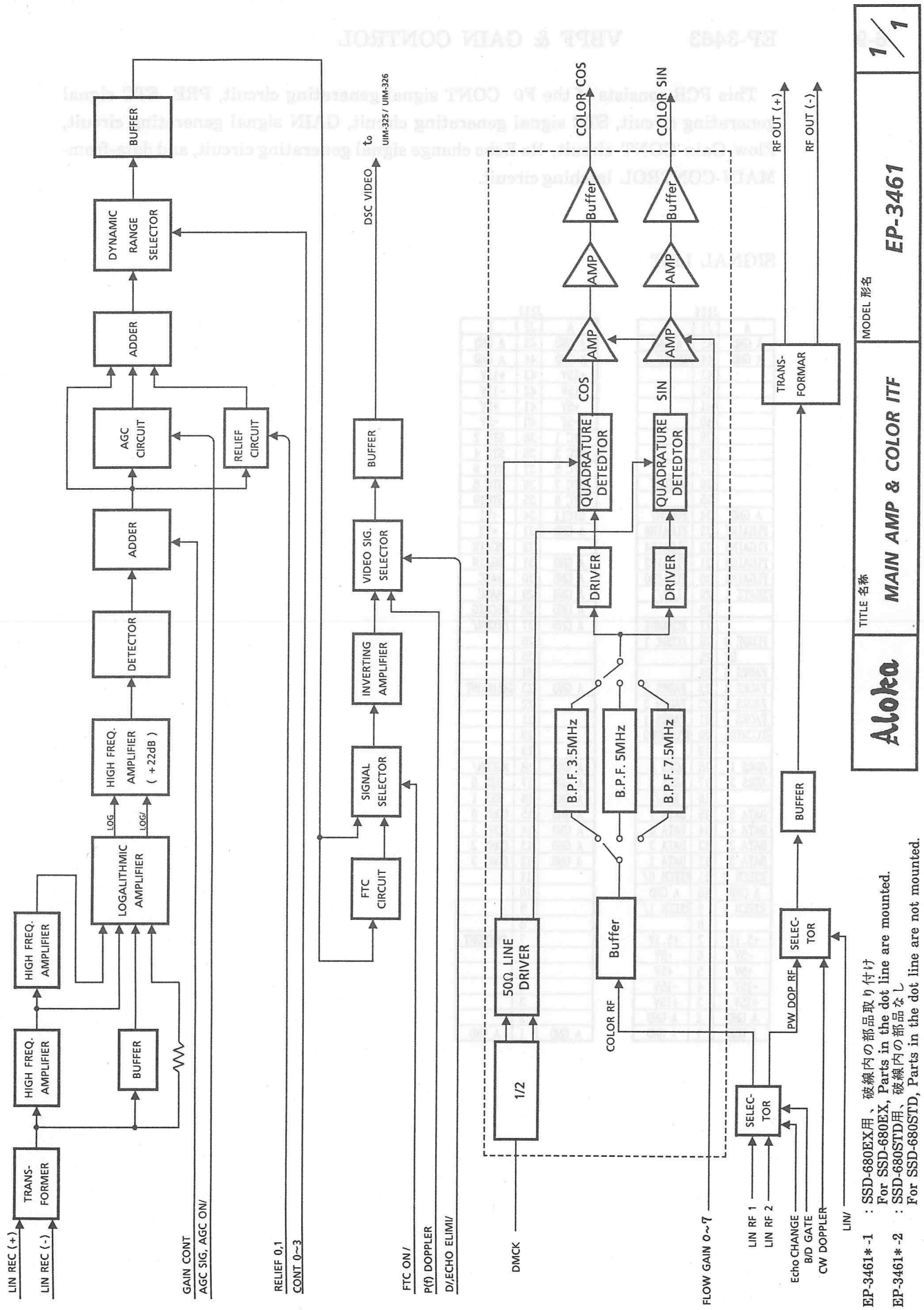


EP-3461*-1 : SSD-680EX用、破線内の部品取り付け
For SSD-680EX, Parts in the dot line are mounted.
EP-3461*-2 : SSD-680STD用、破線内の部品なし
For SSD-680STD, Parts in the dot line are not mounted.

## 6-9 EP-3463 VBPF & GAIN CONTROL

This PCB consists of the F0 CONT signal generating circuit, PRE STC signal generating circuit, STC signal generating circuit, GAIN signal generating circuit, Flow Gain CONT circuit, Rx Echo change signal generating circuit, and data-from-MAIN-CONTROL latching circuit.

### SIGNAL LIST

J111

| A | J1 | B |
|---|---|---|
| A GND | 45 | A GND |
| A GND | 44 | PRESTC 1 |
| | 43 | |
| | 42 | |
| | 41 | |
| | 40 | |
| | 39 | |
| | 38 | |
| | 37 | |
| | 36 | USBLK/ |
| | 35 | |
| A GND | 34 | FOCONT |
| FLGAIN7 | 33 | FLGAIN6 |
| FLGAIN5 | 32 | FLGAIN4 |
| FLGAIN3 | 31 | FLGAIN2 |
| FLGAIN1 | 30 | FLGAIN0 |
| TXGATE 1 | 29 | LIN/ |
| | 28 | |
| | 27 | ECHANGE |
| FCODE 0 | 26 | FCODE 1 |
| D/ | 25 | |
| FADRS 6 | 24 | |
| FADRS 4 | 23 | FADRS 5 |
| FADRS 2 | 22 | FADRS 3 |
| FADRS 0 | 21 | FADRS 1 |
| STCCNTD1 | 20 | STCCNTD0 |
| | 19 | |
| ADRS 1 | 18 | ADRS 0 |
| ADRS 3 | 17 | ADRS 2 |
| | 16 | ENO/ |
| DATA 6 | 15 | DATA 7 |
| DATA 4 | 14 | DATA 5 |
| DATA 2 | 13 | DATA 3 |
| DATA 0 | 12 | DATA 1 |
| RXECH 0 | 11 | RXECH 0/ |
| A GND | 10 | A GND |
| RXECH 1 | 9 | RXECH 1/ |
| | 8 | |
| +5.1V | 7 | +5.1V |
| -5V | 6 | -5V |
| +5V | 5 | +5V |
| -15V | 4 | -15V |
| +15V | 3 | +15V |
| A GND | 2 | A GND |
| A GND | 1 | A GND |

J111

| A | J2 | B |
|---|---|---|
| A GND | 45 | A GND |
| A GND | 44 | A GND |
| +15V | 43 | +15V |
| -15V | 42 | -15V |
| +5V | 41 | +5V |
| -5V | 40 | -5V |
| STC 1 | 39 | STC 2 |
| STC 3 | 38 | STC 4 |
| STC 5 | 37 | STC 6 |
| STC 7 | 36 | STC 8 |
| STC 9 | 35 | STC10 |
| STC11 | 34 | +V1 |
| A GND | 33 | +V2 |
| | 32 | MGAIN |
| A GND | 31 | BGAIN |
| A GND | 30 | BAGC |
| A GND | 29 | MAGC |
| A GND | 28 | AGCSIG |
| A GND | 27 | FTCON/ |
| | 26 | |
| | 25 | |
| | 24 | |
| A GND | 23 | GAINCONT |
| | 22 | |
| | 21 | |
| | 20 | |
| | 19 | |
| A GND | 18 | AGCON/ |
| A GND | 17 | REL 0 |
| A GND | 16 | REL 1 |
| A GND | 15 | CONT 0 |
| A GND | 14 | CONT 1 |
| A GND | 13 | CONT 2 |
| A GND | 12 | CONT 3 |
| | 11 | |
| | 10 | |
| | 9 | |
| | 8 | |
| | 7 | PRECONT |
| | 6 | |
| | 5 | |
| | 4 | |
| | 3 | |
| | 2 | |
| A GND | 1 | A GND |

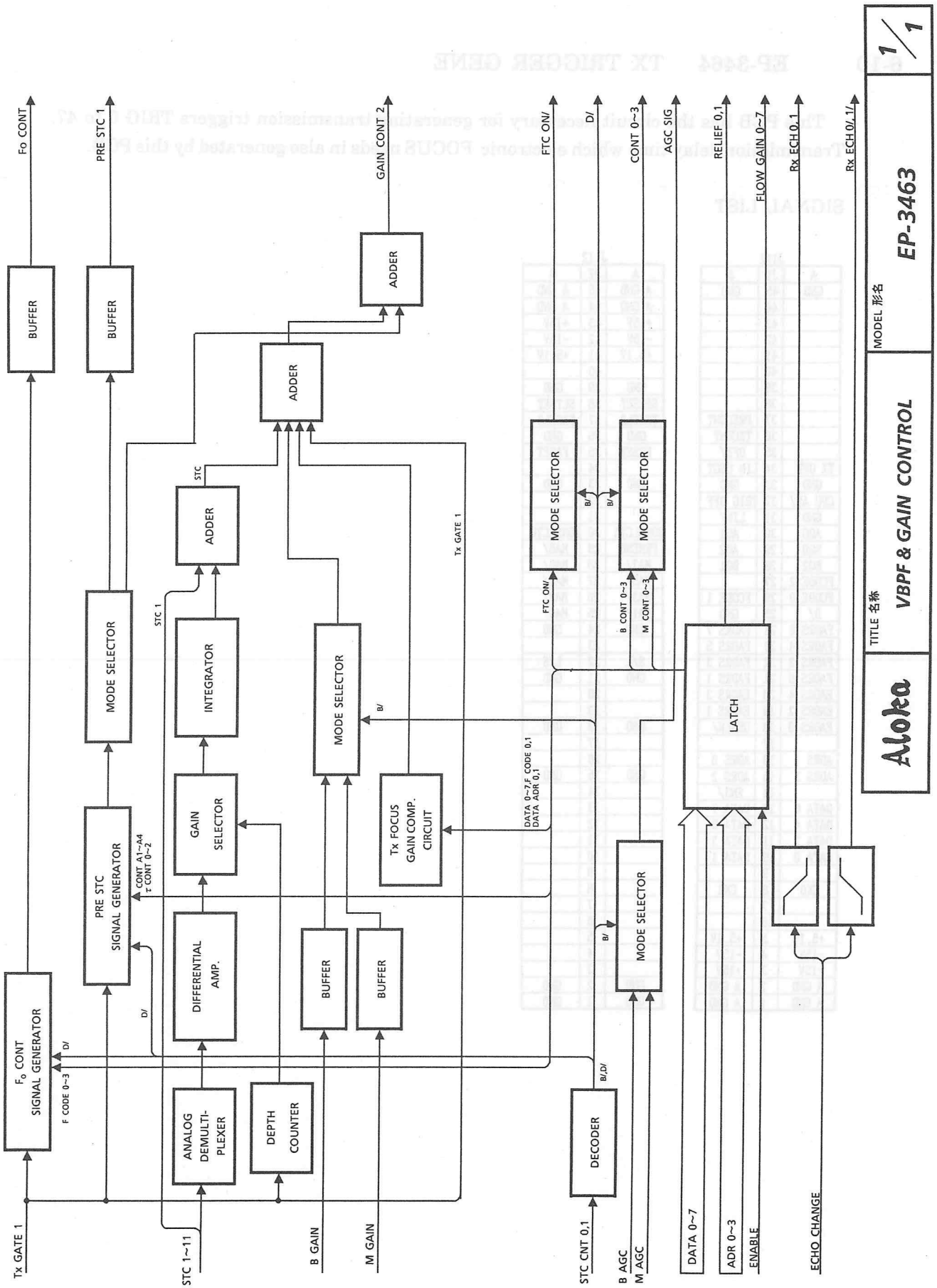
Fo CONT
PRE STC 1
GAIN CONT 2
FTC ON/
D/
CONT 0~3
AGC SIG
RELIEF 0,1
FLOW GAIN 0~7
Rx ECH 0,1
Rx ECH 0/ 1/
BUFFER
BUFFER
ADDER
ADDER
STC
ADDER
MODE SELECTOR
MODE SELECTOR
MODE SELECTOR
MODE SELECTOR
MODE SELECTOR
INTEGRATOR
GAIN SELECTOR
PRE STC SIGNAL GENERATOR
CONT A1~A4
τ CONT 0~2
STC 1
Tx GATE 1
Tx FOCUS GAIN COMP. CIRCUIT
DATA 0~7,F CODE 0,1
DATA ADR 0,1
FTC ON/
B CONT 0~3
M CONT 0~3
B/
B/
B/
B/
LATCH
DIFFERENTIAL AMP.
BUFFER
BUFFER
D/
F CODE 0~3
D/
$F_0$ CONT SIGNAL GENERATOR
ANALOG DEMULTI-PLEXER
DEPTH COUNTER
DECODER
B/D/
Tx GATE 1
STC 1~11
B GAIN
M GAIN
STC CNT 0,1
B AGC
M AGC
DATA 0~7
ADR 0~3
ENABLE
ECHO CHANGE
Aloka
TITLE 名称
VBPF & GAIN CONTROL
MODEL 形名
EP-3463
1/1

## 6-10 EP-3464 TX TRIGGER GENE

This PCB has the circuit necessary for generating transmission triggers TRIG 0 to 47. Transmission delay time which electronic FOCUS needs in also generated by this PCB.

SIGNAL LIST

J112

| A | J1 | B |
|---|---|---|
| GND | 45 | GND |
| | 44 | |
| | 43 | |
| | 42 | |
| | 41 | |
| | 40 | |
| | 39 | |
| | 38 | |
| | 37 | PRECONT |
| | 36 | TXCONT |
| | 35 | DFZ/ |
| TX OFF | 34 | LIN USGT |
| GND | 33 | GND |
| CPU AV/ | 32 | TRIG OFF |
| GND | 31 | LIN/ |
| AQ0 | 30 | AQ1 |
| BQ0 | 29 | AQ2 |
| BQ2 | 28 | BQ1 |
| FCODE 2 | 27 | |
| FCODE 0 | 26 | FCODE 1 |
| D/ | 25 | GND |
| FADRS 6 | 24 | FADRS 7 |
| FADRS 4 | 23 | FADRS 5 |
| FADRS 2 | 22 | FADRS 3 |
| FADRS 0 | 21 | FADRS 1 |
| EADRS 4 | 20 | EADRS 3 |
| EADRS 2 | 19 | EADRS 1 |
| EADRS 0 | 18 | USBLK/ |
| | 17 | |
| ADRS 1 | 16 | ADRS 0 |
| ADRS 3 | 15 | ADRS 2 |
| | 14 | EN3/ |
| DATA 6 | 13 | DATA 7 |
| DATA 4 | 12 | DATA 5 |
| DATA 2 | 11 | DATA 3 |
| DATA 0 | 10 | DATA 1 |
| | 9 | |
| CK0 | 8 | CK1 |
| | 7 | |
| | 6 | |
| +5.1V | 5 | +5.1V |
| -15V | 4 | -15V |
| +15V | 3 | +15V |
| A GND | 2 | A GND |
| A GND | 1 | A GND |

J112

| A | J2 | B |
|---|---|---|
| A GND | 45 | A GND |
| A GND | 44 | A GND |
| +15V | 43 | +15V |
| -15V | 42 | -15V |
| +5.1V | 41 | +5.1V |
| | 40 | |
| GND | 39 | GND |
| SPRSET | 38 | SLTSET |
| TXSEL2 | 37 | TXSEL3 |
| GND | 36 | GND |
| EQSET | 35 | FASET |
| | 34 | |
| GND | 33 | GND |
| | 32 | |
| | 31 | |
| ROMSLCT1 | 30 | ROMSLCT0 |
| FRMEND | 29 | MA8/ |
| MA7/ | 28 | MA6/ |
| MA5/ | 27 | MA4/ |
| MA3/ | 26 | MA2/ |
| MA1/ | 25 | MA0/ |
| GND | 24 | GND |
| | 23 | |
| S/L | 22 | L/S |
| GND | 21 | GND |
| | 20 | |
| | 19 | |
| GND | 18 | GND |
| | 17 | |
| | 16 | |
| GND | 15 | GND |
| | 14 | |
| | 13 | |
| | 12 | |
| | 11 | |
| | 10 | |
| | 9 | |
| | 8 | |
| | 7 | |
| | 6 | |
| | 5 | |
| | 4 | |
| | 3 | |
| GND | 2 | GND |
| GND | 1 | GND |

| J3 | | | |
|---|---|---|---|
| 1 | | 2 | GND |
| 3 | TRIG 0 | 4 | GND |
| 5 | TRIG 1 | 6 | GND |
| 7 | TRIG 2 | 8 | GND |
| 9 | TRIG 3 | 10 | GND |
| 11 | TRIG 4 | 12 | GND |
| 13 | TRIG 5 | 14 | GND |
| 15 | TRIG 6 | 16 | GND |
| 17 | TRIG 7 | 18 | GND |
| 19 | TRIG 16 | 20 | GND |
| 21 | TRIG 17 | 22 | GND |
| 23 | TRIG 18 | 24 | GND |
| 25 | TRIG 19 | 26 | GND |
| 27 | TRIG 20 | 28 | GND |
| 29 | TRIG 21 | 29 | GND |
| 31 | TRIG 22 | 32 | GND |
| 33 | TRIG 23 | 34 | GND |
| 35 | TRIG 32 | 36 | GND |
| 37 | TRIG 33 | 38 | GND |
| 39 | TRIG 34 | 40 | GND |
| 41 | TRIG 35 | 42 | GND |
| 43 | TRIG 36 | 44 | GND |
| 45 | TRIG 37 | 46 | GND |
| 47 | TRIG 38 | 48 | GND |
| 49 | TRIG 39 | 50 | GND |

| J4 | | | |
|---|---|---|---|
| 1 | | 2 | GND |
| 3 | TRIG 8 | 4 | GND |
| 5 | TRIG 9 | 6 | GND |
| 7 | TRIG 10 | 8 | GND |
| 9 | TRIG 11 | 10 | GND |
| 11 | TRIG 12 | 12 | GND |
| 13 | TRIG 13 | 14 | GND |
| 15 | TRIG 14 | 16 | GND |
| 17 | TRIG 15 | 18 | GND |
| 19 | TRIG 24 | 20 | GND |
| 21 | TRIG 25 | 22 | GND |
| 23 | TRIG 26 | 24 | GND |
| 25 | TRIG 27 | 26 | GND |
| 27 | TRIG 28 | 28 | GND |
| 29 | TRIG 29 | 29 | GND |
| 31 | TRIG 30 | 32 | GND |
| 33 | TRIG 31 | 34 | GND |
| 35 | TRIG 40 | 36 | GND |
| 37 | TRIG 41 | 38 | GND |
| 39 | TRIG 42 | 40 | GND |
| 41 | TRIG 43 | 42 | GND |
| 43 | TRIG 44 | 44 | GND |
| 45 | TRIG 45 | 46 | GND |
| 47 | TRIG 46 | 48 | GND |
| 49 | TRIG 47 | 50 | GND |

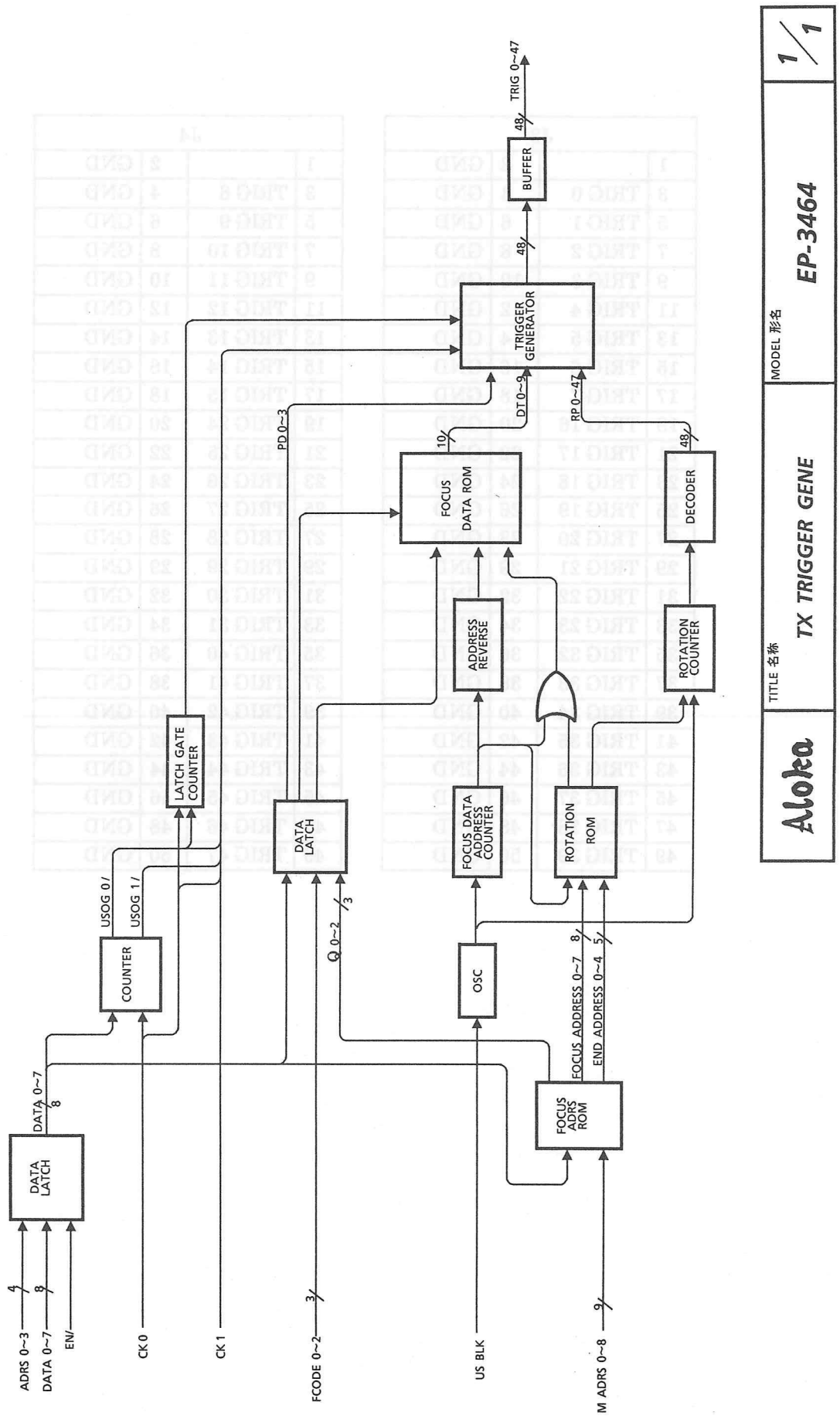
Aloka
TITLE 名称
TX TRIGGER GENE
MODEL 形名
EP-3464
1/1
ADRS 0~3
DATA 0~7
EN/
CK 0
CK 1
FCODE 0~2
US BLK
M ADRS 0~8
DATA LATCH
DATA 0~7
COUNTER
USOG 0/
USOG 1/
LATCH GATE COUNTER
DATA LATCH
Q 0~2
OSC
FOCUS DATA ADDRESS COUNTER
ADDRESS REVERSE
FOCUS DATA ROM
PD 0~3
ROTATION ROM
FOCUS ADRS ROM
FOCUS ADDRESS 0~7
END ADDRESS 0~4
ROTATION COUNTER
DECODER
DT 0~9
RP 0~47
TRIGGER GENERATOR
BUFFER
TRIG 0~47

## 6-11 EP-3465 GEU TIMING & ADDRESS

This PCB consists of the timing signal generating part and the address generating part.

SIGNAL LIST

J113

| A | J1 | B |
|---|---|---|
| GND | 45 | GND |
| | 44 | TX CONT |
| | 43 | |
| | 42 | |
| | 41 | |
| | 40 | |
| | 39 | |
| | 38 | |
| | 37 | |
| | 36 | |
| | 35 | DFZ/ |
| TX OFF | 34 | LIN USGT |
| B/D GATE | 33 | GND |
| | 32 | |
| | 31 | |
| TXGATE1 | 30 | |
| GND | 29 | GND |
| | 28 | |
| FCODE 2 | 27 | ECHANGE |
| FCODE 0 | 26 | FCODE 1 |
| | 25 | GND |
| | 24 | |
| | 23 | |
| 56/40 | 22 | GND |
| | 21 | ⚠ |
| | 20 | D.S GATE |
| /IDCODE1 | 19 | USBLK/ |
| STCCNT0 | 18 | STCCNT1 |
| GND | 17 | GND |
| ADRS 1 | 16 | ADRS 0 |
| ADRS 3 | 15 | ADRS 2 |
| EN2/ | 14 | EN4/ |
| DATA 6 | 13 | DATA 7 |
| DATA 4 | 12 | DATA 5 |
| DATA 2 | 11 | DATA 3 |
| DATA 0 | 10 | DATA 1 |
| CAR0 | 9 | CAR1 |
| CK0 | 8 | CK1 |
| DMCLK | 7 | DMCLK/ |
| GND | 6 | GND |
| R-R | 5 | CC8/ |
| +5.1V | 4 | +5.1V |
| +5.1V | 3 | +15V |
| GND | 2 | A GND |
| GND | 1 | GND |

J113

| A | J2 | B |
|---|---|---|
| A GND | 45 | A GND |
| A GND | 44 | A GND |
| +5.1V | 43 | +5.1V |
| +5.1V | 42 | +5.1V |
| | 41 | |
| GND | 40 | GND |
| | 39 | |
| SPRSET | 38 | SLTSET |
| TXSEL2 | 37 | TXSEL3 |
| | 36 | |
| EQSET | 35 | FASET |
| GND | 34 | GND |
| ECG-FRM | 33 | V-CODE1 |
| DF AREA | 32 | V-CODE0 |
| LINESTRT | 31 | USBLK |
| ROMSLCT1 | 30 | ROMSLCT0 |
| FRMEND | 29 | MA8/ |
| MA7/ | 28 | MA6/ |
| MA5/ | 27 | MA4/ |
| MA3/ | 26 | MA2/ |
| MA1/ | 25 | MA0/ |
| GND | 24 | GND |
| FLW CT/ | 23 | SCLK |
| C-GATE | 22 | C-EN |
| DSC-CEN | 21 | DCLR |
| FLWAREA | 20 | B/W EN |
| MTI EN/ | 19 | DFZ/ |
| COLORER | 18 | ZIRQ |
| | 17 | (ALTFRM) |
| GND | 16 | GND |
| | 15 | D-OFF |
| 56 SLCT | 14 | B/D GATE |
| DOT CLK | 13 | DOP RATE |
| | 12 | SP UNBLK |
| | 11 | TR UNBLK |
| GND | 10 | GND |
| | 9 | |
| | 8 | |
| | 7 | PRECONT |
| | 6 | |
| | 5 | |
| | 4 | |
| | 3 | |
| GND | 2 | GND |
| GND | 1 | GND |

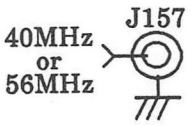


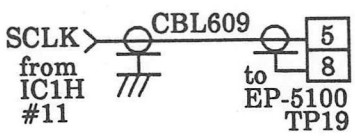

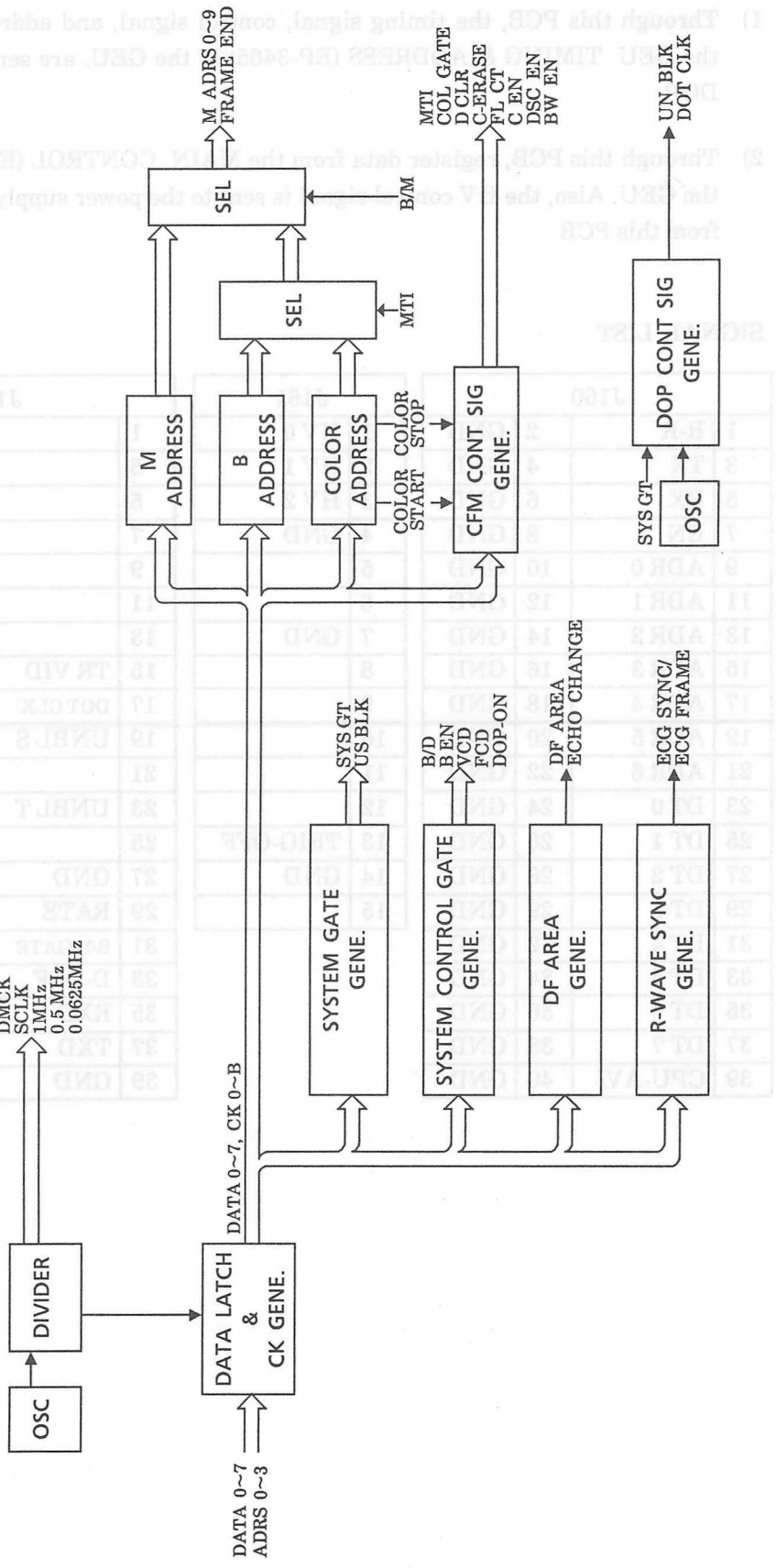


| Aloka | TITLE 名称 GEU TIMING & ADDRESS | MODEL 形名 EP-3465 | 1/1 |
|---|---|---|---|

## 6-12 EP-3525 GEU INTERFACE

1) Through this PCB, the timing signal, control signal, and address, generated by the GEU TIMING & ADDRESS (EP-3465) in the GEU, are sent to the DSC and DOP.

2) Through this PCB, register data from the MAIN CONTROL (EP-3265) is sent to the GEU. Also, the HV control signal is sent to the power supply unit (PSU-S680) from this PCB.

SIGNAL LIST

| J160 | | | |
|---|---|---|---|
| 1 | R-R | 2 | GND |
| 3 | TX | 4 | GND |
| 5 | RX | 6 | GND |
| 7 | EN | 8 | GND |
| 9 | ADR 0 | 10 | GND |
| 11 | ADR 1 | 12 | GND |
| 13 | ADR 2 | 14 | GND |
| 15 | ADR 3 | 16 | GND |
| 17 | ADR 4 | 18 | GND |
| 19 | ADR 5 | 20 | GND |
| 21 | ADR 6 | 22 | GND |
| 23 | DT 0 | 24 | GND |
| 25 | DT 1 | 26 | GND |
| 27 | DT 2 | 28 | GND |
| 29 | DT 3 | 29 | GND |
| 31 | DT 4 | 32 | GND |
| 33 | DT 5 | 34 | GND |
| 35 | DT 6 | 36 | GND |
| 37 | DT 7 | 38 | GND |
| 39 | CPU-AV/ | 40 | GND |

| J161 | |
|---|---|
| 1 | HV 0 |
| 2 | HV 1 |
| 3 | HV 2 |
| 4 | GND |
| 5 | |
| 6 | |
| 7 | GND |
| 8 | |
| 9 | |
| 10 | |
| 11 | |
| 12 | |
| 13 | TRIG-OFF |
| 14 | GND |
| 15 | |

| J162 | | | |
|---|---|---|---|
| 1 | | 2 | |
| 3 | | 4 | |
| 5 | | 6 | |
| 7 | | 8 | |
| 9 | | 10 | |
| 11 | | 12 | |
| 13 | | 14 | |
| 15 | TR VID | 16 | TR VID/ |
| 17 | DOT CLK | 18 | DOT CLK/ |
| 19 | UNBL S | 20 | UNBL S/ |
| 21 | | 22 | |
| 23 | UNBL T | 24 | UNBL T/ |
| 25 | | 26 | 56SLCT/ |
| 27 | GND | 28 | R-R |
| 29 | RATE | 29 | RATE/ |
| 31 | B/D GATE | 32 | B/D GATE/ |
| 33 | D-OFF | 34 | D-OFF/ |
| 35 | RXD | 36 | RXD/ |
| 37 | TXD | 38 | TXD/ |
| 39 | GND | 40 | VCC |

| J163 | | | |
|---|---|---|---|
| 1 | | 26 | |
| 2 | | 27 | |
| 3 | TRACE | 28 | |
| 4 | | 29 | |
| 5 | | 30 | |
| 6 | | 31 | |
| 7 | GND | 32 | GND |
| 8 | SPARE 1 | 33 | SPARE 2 |
| 9 | FLW-RNG | 34 | SPARE 3 |
| 10 | MTI-EN | 35 | DFZ/ |
| 11 | FLW AREA | 36 | B/WEN |
| 12 | DSC-CEN | 37 | DCLR |
| 13 | C-GATE | 38 | C-EN |
| 14 | FLW-CT/ | 39 | |
| 15 | GND | 40 | GND |
| 16 | MA1/ | 41 | MA0/ |
| 17 | MA3/ | 42 | MA2/ |
| 18 | MA5/ | 43 | MA4/ |
| 19 | MA7/ | 44 | MA6/ |
| 20 | FRMEND | 45 | MA8/ |
| 21 | | 46 | |
| 22 | L-START | 47 | US BLK |
| 23 | DF-AREA | 48 | V-CODE 0 |
| 24 | ECG-FRM | 49 | V-CODE 1 |
| 25 | GND | 50 | GND |

| J166 | |
|---|---|
| 1 | SCLK |
| 2 | GND |

| J164 | | | |
|---|---|---|---|
| 1 | VCC | 2 | VCC |
| 3 | R-R | 4 | CC8/ |
| 5 | GND | 6 | GND |
| 7 | DT 0 | 8 | DT 1 |
| 9 | DT 2 | 10 | DT 3 |
| 11 | DT 4 | 12 | DT 5 |
| 13 | DT 6 | 14 | DT 7 |
| 15 | EN 2/ | 16 | EN 4/ |
| 17 | EN 0/ | 18 | EN 1/ |
| 19 | CPU-AV/ | 20 | TRIG-OFF |
| 21 | ADR 3 | 22 | ADR 2 |
| 23 | ADR 1 | 24 | ADR 0 |
| 25 | GND | 26 | GND |

| J165 | | | |
|---|---|---|---|
| 1 | GND | 2 | GND |
| 3 | | 4 | TR-UNBLK |
| 5 | | 6 | SP-UNBLK |
| 7 | DOT CLK | 8 | DOP-RATE |
| 9 | 56 SLCT | 10 | B/D GATE |
| 11 | EN3/ | 12 | D-OFF |
| 13 | GND | 14 | GND |
| 15 | SPARE 1 | 16 | SPARE 2 |
| 17 | FLW-RNG | 18 | SPARE 3 |
| 19 | MTI-EN/ | 20 | DFZ/ |
| 21 | FLW AREA | 22 | B/W EN |
| 23 | DSC-CEN | 24 | DCLR |
| 25 | C-GATE | 26 | C-EN |
| 27 | FLW-CT/ | 28 | SCLK |
| 29 | GND | 29 | GND |
| 31 | MA 1/ | 32 | MA 0/ |
| 33 | MA 3/ | 34 | MA 2/ |
| 35 | MA 5/ | 36 | MA 4/ |
| 37 | MA 7/ | 38 | MA 6/ |
| 39 | FRM END | 40 | MA 8/ |
| 41 | | 42 | |
| 43 | L-START | 44 | US BLK |
| 45 | DF-AREA | 46 | V-CODE 0 |
| 47 | ECG-FRM | 48 | V-CODE 1 |
| 49 | GND | 50 | GND |

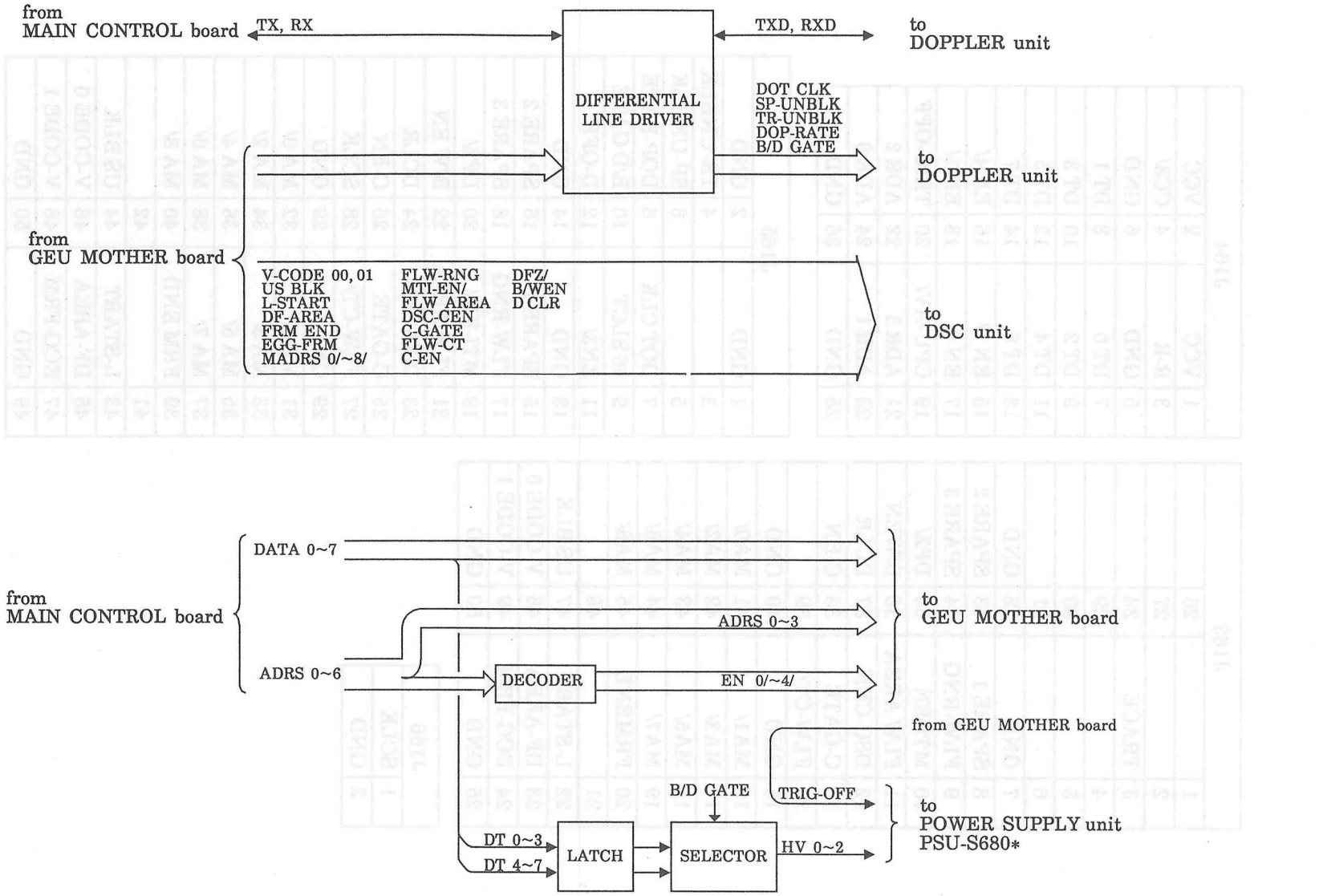


| Aloka | TITLE 名称 GEU INTERFACE | MODEL 形名 EP-3525 | 1/1 |
|---|---|---|---|

## 6-13 EP-3452 RX SELECT CONT

This control circuit is used for selecting a transducer number.

SIGNAL LIST

| J1 | |
|---|---|
| 1 | GND |
| 2 | GND |
| 3 | +5V |
| 4 | +5V |
| 5 | |
| 6 | |
| 7 | FOCUS ADDRESS 0 |
| 8 | FOCUS ADDRESS 1 |
| 9 | FOCUS ADDRESS 2 |
| 10 | FOCUS ADDRESS 3 |
| 11 | FOCUS ADDRESS 4 |
| 12 | FOCUS ADDRESS 5 |
| 13 | FOCUS ADDRESS 6 |
| 14 | FOCUS ADDRESS 7 |
| 15 | LIN/SEC |
| 16 | US BLK |

| J2 | | | |
|---|---|---|---|
| 1 | SEL 0 | 2 | SEL 1 |
| 3 | SEL 2 | 4 | SEL 3 |
| 5 | SEL 4 | 6 | SEL 5 |
| 7 | SEL 6 | 8 | SEL 7 |
| 9 | SLCK 0 | 10 | SLCK 1 |
| 11 | SLCK 2 | 12 | SLCK 3 |
| 13 | SLCK 4 | 14 | SLCK 5 |
| 15 | SLCK 6 | 16 | SLCK 7 |
| 17 | SLCK 8 | 18 | SLCK 9 |
| 19 | SLCK 10 | 20 | SLCK 11 |
| 21 | SLCK 12 | 22 | SLCK 13 |
| 23 | SLCK 14 | 24 | SLCK 15 |
| 25 | SLCK 16 | 26 | SLCK 17 |
| 27 | SLCK 18 | 28 | SLCK 19 |
| 29 | SLCK 20 | 29 | SLCK 21 |
| 31 | SLCK 22 | 32 | SLCK 23 |
| 33 | | 34 | |
| 35 | | 36 | |
| 37 | | 38 | |
| 39 | | 40 | |

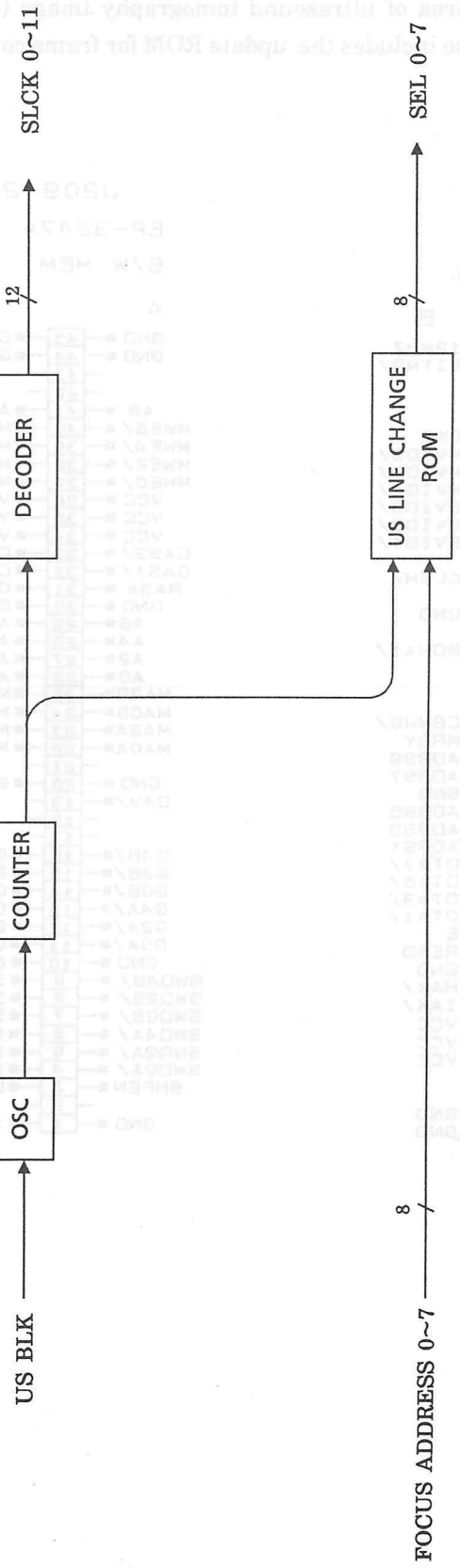


| Aloka | TITLE 名称 RX SELECT CONT | MODEL 形名 EP-3452 | 1/1 |
|---|---|---|---|

## 6-14 EP-3247 B/W MEMORY

This PCB includes the mass memory for B/W having a capacity large enough to cover the whole area of ultrasound tomography image (512 pixels×512 pixels×6 bits). The PCB also includes the update ROM for frame correlation use.

SIGNAL LIST

J209-1

| A | | | B |
|---|---|---|---|
| GND | 45 | 44 | 12MHZ |
| | 44 | 43 | BITMP/ |
| | 43 | 42 | |
| | 42 | 41 | |
| CINVID/ | 41 | 40 | |
| GND | 40 | 39 | GND |
| MVID4/ | 39 | 38 | MVID5/ |
| MVID2/ | 38 | 37 | MVID3/ |
| MVID0/ | 37 | 36 | MVID1/ |
| SVID4/ | 36 | 35 | SVID5/ |
| SVID2/ | 35 | 34 | SVID3/ |
| SVID0/ | 34 | 33 | SVID1/ |
| | 33 | 32 | |
| BOFF/ | 32 | 31 | CLRM/ |
| B/WINH/ | 31 | 30 | |
| GND | 30 | 29 | GND |
| | 29 | 28 | |
| DMARQ/ | 28 | 27 | BDMA1/ |
| | 27 | 26 | |
| | 26 | 25 | |
| ROMST/ | 25 | 24 | |
| | 24 | 23 | CBWWG/ |
| MRQT/ | 23 | 22 | MRDY |
| ADRS8 | 22 | 21 | ADRS9 |
| ADRS6 | 21 | 20 | ADRS7 |
| GND | 20 | 19 | GND |
| ADRS4 | 19 | 18 | ADRS5 |
| ADRS2 | 18 | 17 | ADRS3 |
| ADRS0 | 17 | 16 | ADRS1 |
| DTA6/ | 16 | 15 | DTA7/ |
| DTA4/ | 15 | 14 | DTA5/ |
| DTA2/ | 14 | 13 | DTA3/ |
| DTA0/ | 13 | 12 | DTA1/ |
| RAMEN | 12 | 11 | E |
| RST/ | 11 | 10 | READ |
| GND | 10 | 9 | GND |
| HRQ/ | 9 | 8 | HAK/ |
| IRQ/ | 8 | 7 | IAK/ |
| VCC | 7 | 6 | VCC |
| VCC | 6 | 5 | VCC |
| VCC | 5 | 4 | VCC |
| | 4 | 3 | |
| | 3 | 2 | |
| GND | 2 | 1 | GND |
| GND | 1 | | GND |

J209-2

EP-3247*

B/W MEM.

| A | | | B |
|---|---|---|---|
| GND | 45 | 44 | GND |
| GND | 44 | 43 | GND |
| | 43 | 42 | |
| | 42 | 41 | |
| A8 | 41 | 40 | A9 |
| MWE6/ | 40 | 39 | MWE7/ |
| MWE4/ | 39 | 38 | MWE5/ |
| MWE2/ | 38 | 37 | MWE3/ |
| MWE0/ | 37 | 36 | MWE1/ |
| VCC | 36 | 35 | VCC |
| VCC | 35 | 34 | VCC |
| VCC | 34 | 33 | VCC |
| CAS3/ | 33 | 32 | CAS4/ |
| CAS1/ | 32 | 31 | CAS2/ |
| RASA | 31 | 30 | OE/ |
| GND | 30 | 29 | GND |
| A6 | 29 | 28 | A7 |
| A4 | 28 | 27 | A5 |
| A2 | 27 | 26 | A3 |
| A0 | 26 | 25 | A1 |
| MA2B | 25 | 24 | MA3B |
| MA0B | 24 | 23 | MA1B |
| MA2A | 23 | 22 | MA3A |
| MA0A | 22 | 21 | MA1A |
| | 21 | 20 | |
| GND | 20 | 19 | GND |
| DAV/ | 19 | 18 | |
| | 18 | 17 | |
| | 17 | 16 | |
| G4B/ | 16 | 15 | G5B/ |
| G2B/ | 15 | 14 | G3B/ |
| G0B/ | 14 | 13 | G1B/ |
| G4A/ | 13 | 12 | G5A/ |
| G2A/ | 12 | 11 | G3A/ |
| G0A/ | 11 | 10 | G1A/ |
| GND | 10 | 9 | GND |
| SWD4B/ | 9 | 8 | SWD5B/ |
| SWD2B/ | 8 | 7 | SWD3B/ |
| SWD0B/ | 7 | 6 | SWD1B/ |
| SWD4A/ | 6 | 5 | SWD5A/ |
| SWD2A/ | 5 | 4 | SWD3A/ |
| SWD0A/ | 4 | 3 | SWD1A/ |
| SHFEN | 3 | 2 | LSR/ |
| | 2 | 1 | |
| GND | 1 | | 12MHZ/ |

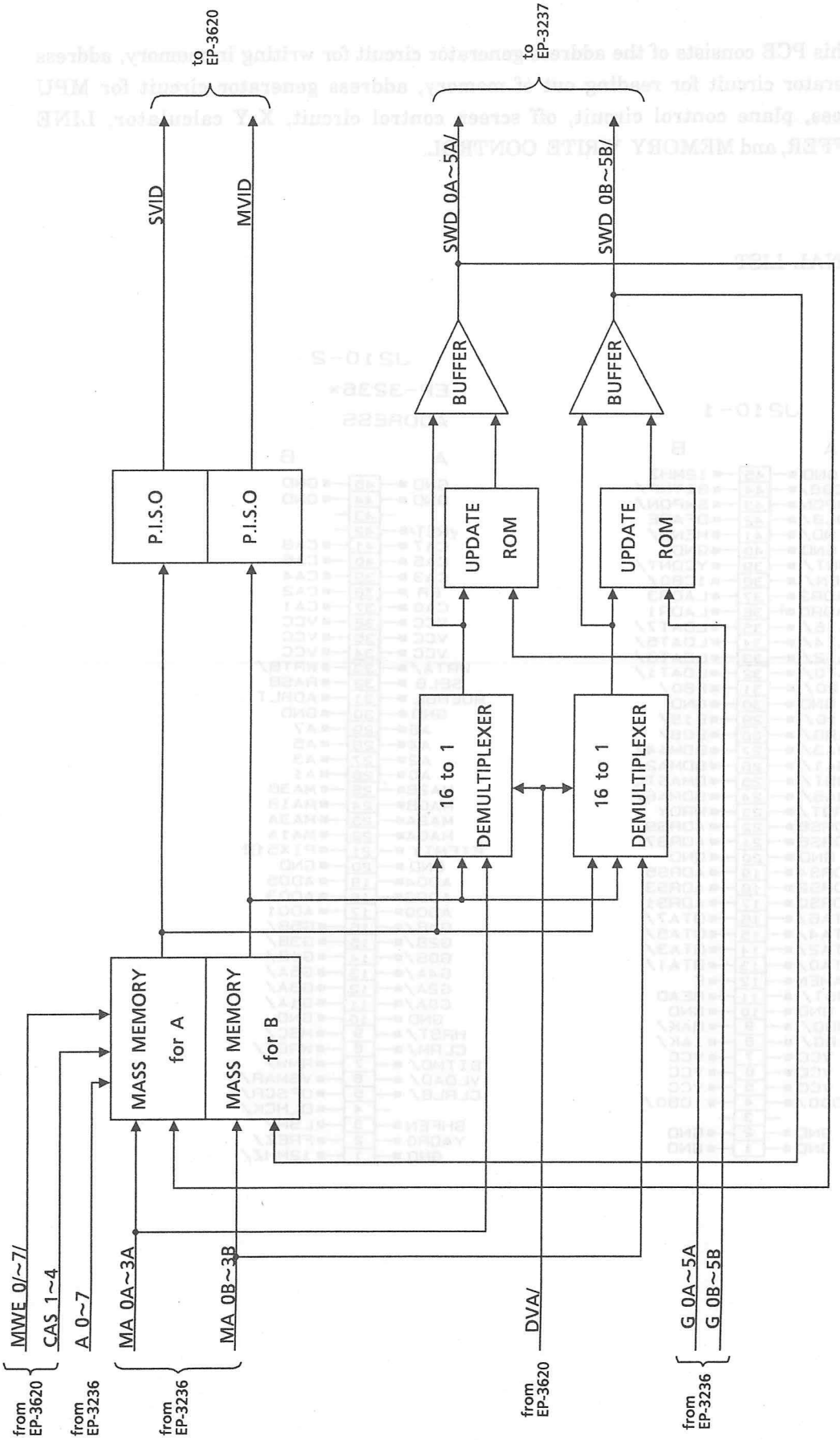


| Aloka | TITLE 名称 BIW MEMORY | MODEL 形名 EP-3247 | 1/1 |
|---|---|---|---|

## 6-15 EP-3236 DSC ADDRESS

This PCB consists of the address generator circuit for writing in memory, address generator circuit for reading out of memory, address generator circuit for MPU Access, plane control circuit, off screen control circuit, X-Y calculator, LINE BUFFER, and MEMORY WRITE CONTROL.

SIGNAL LIST

J210-1

| A | | B |
|---|---|---|
| GND | 45 | 12MHZ |
| CB8/ | 44 | BITMP/ |
| SWPON | 43 | SWPON/ |
| LDLB/ | 42 | DFARE |
| FEND/ | 41 | MEND/ |
| GND | 40 | GND |
| XCONT/ | 39 | YCONT/ |
| LEN/ | 38 | 1CB0/ |
| LADR2 | 37 | LADR3 |
| LADR0 | 36 | LADR1 |
| LDAT6/ | 35 | LDAT7/ |
| LDAT4/ | 34 | LDAT5/ |
| LDAT2/ | 33 | LDAT3/ |
| LDAT0/ | 32 | LDAT1/ |
| E20/ | 31 | F80/ |
| GND | 30 | GND |
| E10/ | 29 | E18/ |
| DMARQ/ | 28 | E08/ |
| BDMA3/ | 27 | BDMA4/ |
| BDMA1/ | 26 | BDMA2/ |
| ROMST/ | 25 | DMASTL |
| BDMA5/ | 24 | BDMA6/ |
| MRQT/ | 23 | MRDY |
| ADRS8 | 22 | ADRS9 |
| ADRS6 | 21 | ADRS7 |
| GND | 20 | GND |
| ADRS4 | 19 | ADRS5 |
| ADRS2 | 18 | ADRS3 |
| ADRS0 | 17 | ADRS1 |
| DTA6/ | 16 | DTA7/ |
| DTA4/ | 15 | DTA5/ |
| DTA2/ | 14 | DTA3/ |
| DTA0/ | 13 | DTA1/ |
| RAMEN | 12 | E |
| RST/ | 11 | READ |
| GND | 10 | GND |
| HRQ/ | 9 | HAK/ |
| IRQ/ | 8 | IAK/ |
| VCC | 7 | VCC |
| VCC | 6 | VCC |
| VCC | 5 | VCC |
| 1D00/ | 4 | 1D80/ |
| | 3 | |
| GND | 2 | GND |
| GND | 1 | GND |

J210-2
EP-3236*
ADDRESS

| A | | B |
|---|---|---|
| GND | 45 | GND |
| GND | 44 | GND |
| | 43 | |
| VRST/ | 42 | |
| CA7 | 41 | CA8 |
| CA5 | 40 | CA6 |
| CA3 | 39 | CA4 |
| ER | 38 | CA2 |
| CA0 | 37 | CA1 |
| VCC | 36 | VCC |
| VCC | 35 | VCC |
| VCC | 34 | VCC |
| WRTA/ | 33 | WRTB/ |
| SELB | 32 | RASB |
| ROENBL | 31 | ADRLT |
| GND | 30 | GND |
| A6 | 29 | A7 |
| A4 | 28 | A5 |
| A2 | 27 | A3 |
| A0 | 26 | A1 |
| MA2B | 25 | MA3B |
| MA0B | 24 | MA1B |
| MA2A | 23 | MA3A |
| MA0A | 22 | MA1A |
| FIFMTY | 21 | PIX512 |
| GND | 20 | GND |
| AD04 | 19 | AD05 |
| AD02 | 18 | AD03 |
| AD00 | 17 | AD01 |
| G4B/ | 16 | G5B/ |
| G2B/ | 15 | G3B/ |
| G0B/ | 14 | G1B/ |
| G4A/ | 13 | G5A/ |
| G2A/ | 12 | G3A/ |
| G0A/ | 11 | G1A/ |
| GND | 10 | GND |
| HRST/ | 9 | MSC/ |
| CLRM/ | 8 | WRGT/ |
| BITMD/ | 7 | RMW/ |
| VLOAD/ | 6 | VSMAR/ |
| CLRLB/ | 5 | OFSCR/ |
| | 4 | DLHCK/ |
| SHFEN | 3 | LSR/ |
| YADR0 | 2 | FREZ/ |
| GND | 1 | 12MHZ/ |

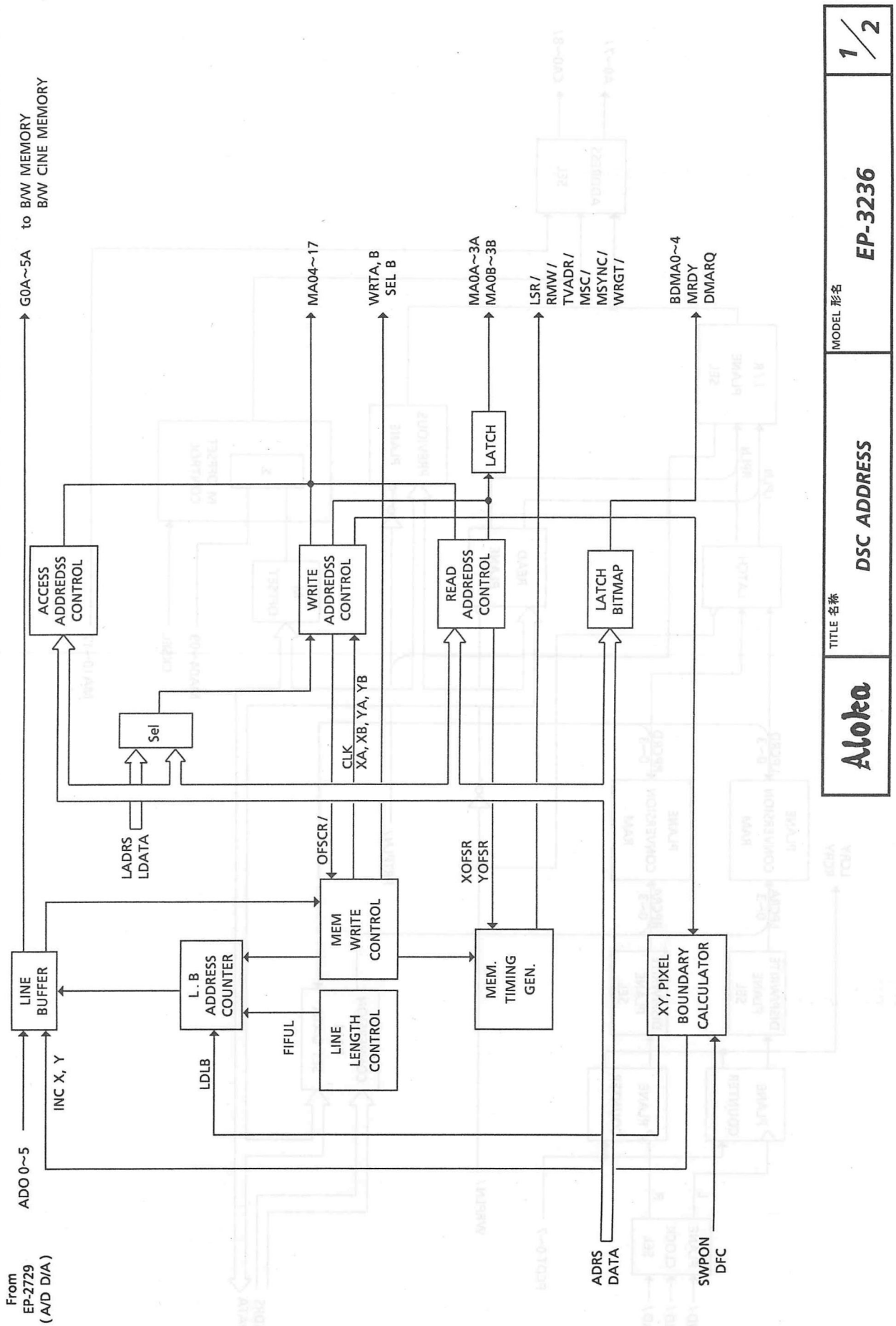
Aloka
TITLE 名称
DSC ADDRESS
MODEL 形名
EP-3236
1/2
From EP-2729 (A/D D/A)
ADO 0~5
INC X, Y
LINE BUFFER
LDLB
L. B ADDRESS COUNTER
FIFUL
LINE LENGTH CONTROL
MEM WRITE CONTROL
OFSCR/
LADRS LDATA
Sel
ACCESS ADDREDSS CONTROL
G0A~5A
to B/W MEMORY B/W CINE MEMORY
WRITE ADDREDSS CONTROL
CLK
XA, XB, YA, YB
MA04~17
WRTA, B SEL B
READ ADDREDSS CONTROL
LATCH
MA0A~3A MA0B~3B
XOFSR YOFSR
MEM. TIMING GEN.
LATCH BITMAP
LSR / RMW / TVADR / MSC/ MSYNC/ WRGT/
XY, PIXEL BOUNDARY CALCULATOR
BDMA0~4 MRDY DMARQ
ADRS DATA
SWPON DFC

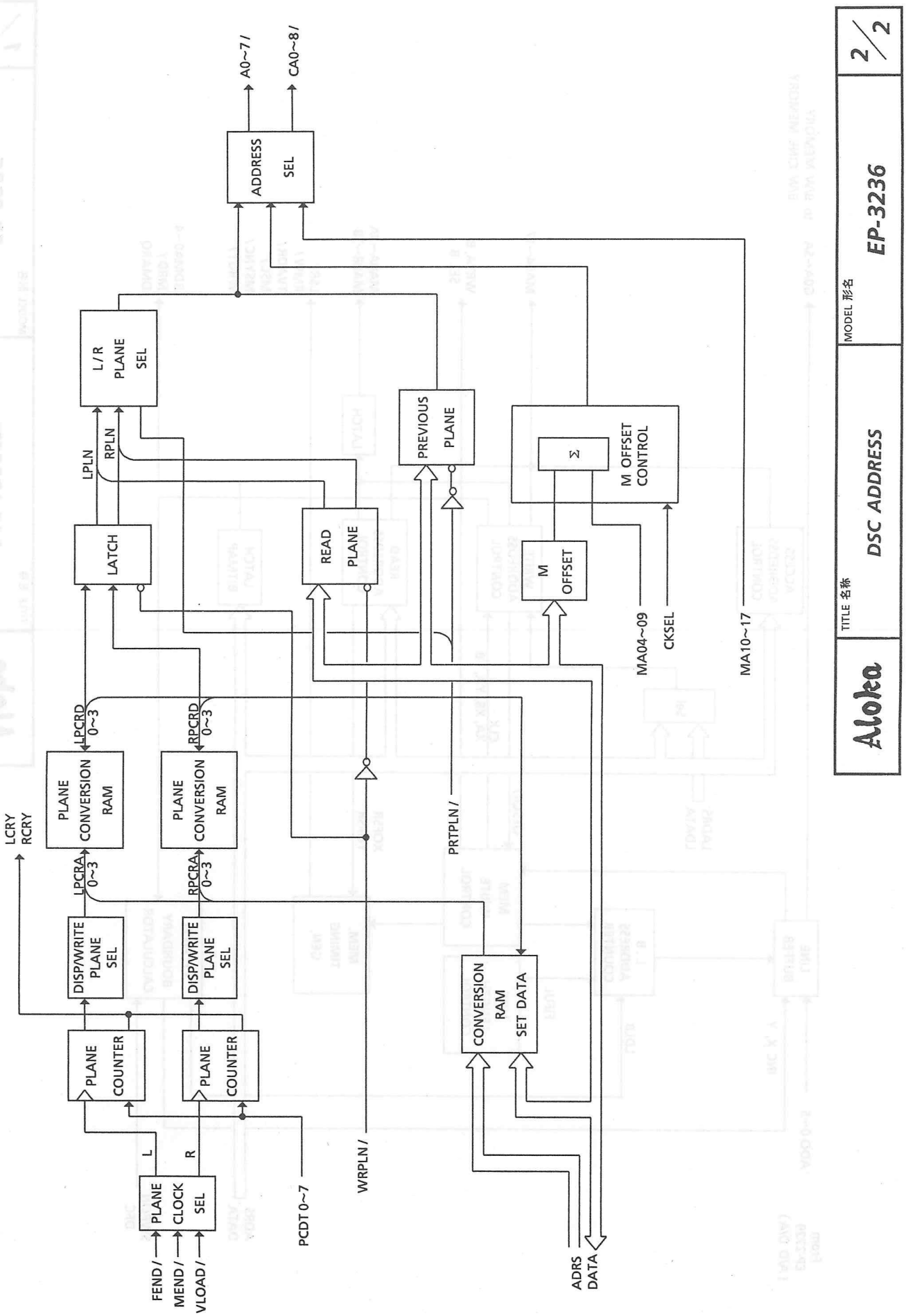
A0~7 /
CA0~8 /
ADDRESS SEL
L / R PLANE SEL
LPLN
RPLN
LATCH
READ PLANE
PREVIOUS PLANE
Σ
M OFFSET CONTROL
M OFFSET
MA04~09
CKSEL
MA10~17
LPCRD 0~3
RPCRD 0~3
PLANE CONVERSION RAM
PLANE CONVERSION RAM
LCRY
RCRY
LPCRA 0~3
RPCRA 0~3
DISP/WRITE PLANE SEL
DISP/WRITE PLANE SEL
PRTPLN /
PLANE COUNTER
PLANE COUNTER
CONVERSION RAM SET DATA
L
R
PLANE CLOCK SEL
FEND /
MEND /
VLOAD /
PCDT 0~7
WRPLN /
ADRS DATA
Aloka
TITLE 名称
DSC ADDRESS
MODEL 形名
EP-3236
2/2

## 6-16 EP-3620 DSC TIMING

This PCB consists of the timing generating circuit, horizontal smoothing circuit, line memory circuit, and memory timing control circuit

SIGNAL LIST

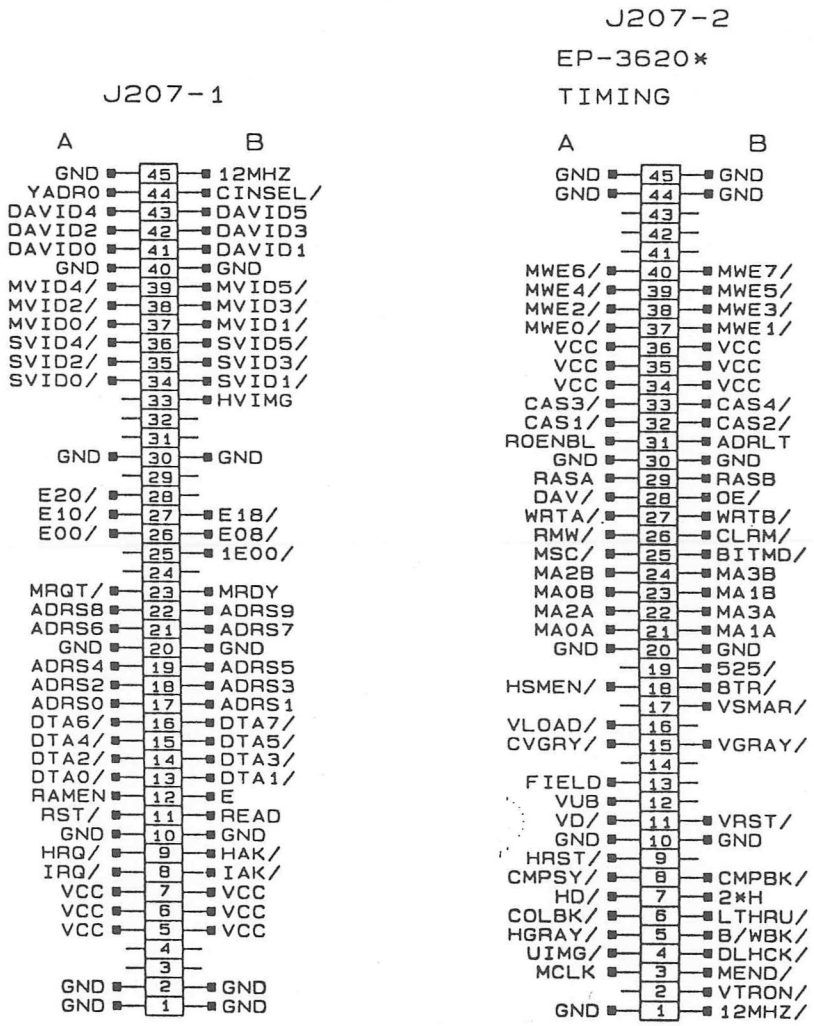

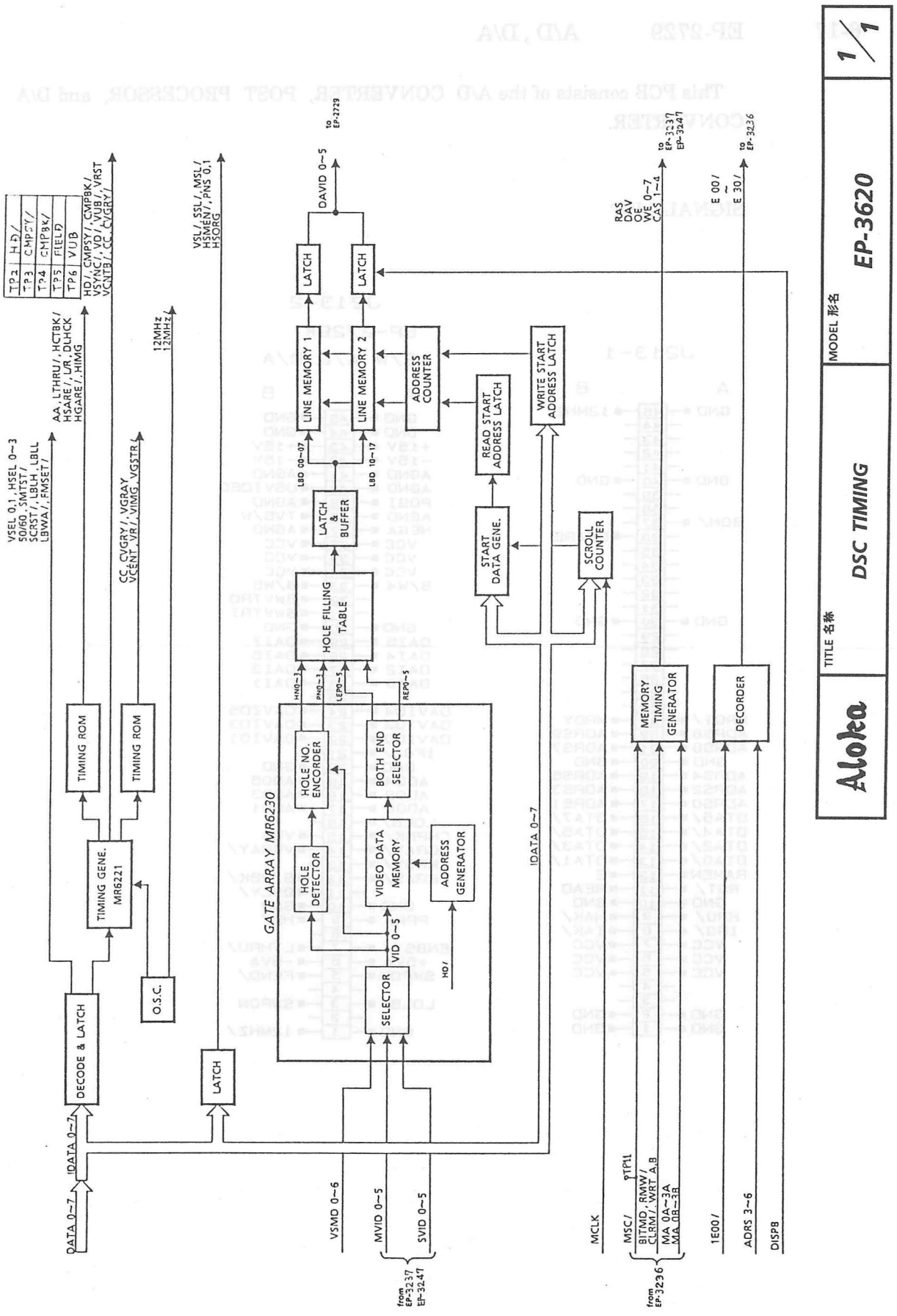
Aloka
TITLE 名称
DSC TIMING
MODEL 形名
EP-3620
1/1
DATA 0~7
IDATA 0~7
DECODE & LATCH
TIMING GENE. MR6221
TIMING ROM
TIMING ROM
O.S.C.
LATCH
GATE ARRAY MR6230
HOLE DETECTOR
HOLE NO. ENCORDER
VIDEO DATA MEMORY
BOTH END SELECTOR
ADDRESS GENERATOR
SELECTOR
HOLE FILLING TABLE
LATCH & BUFFER
LINE MEMORY 1
LINE MEMORY 2
LATCH
LATCH
ADDRESS COUNTER
READ START ADDRESS LATCH
WRITE START ADDRESS LATCH
START DATA GENE.
SCROLL COUNTER
MEMORY TIMING GENERATOR
DECORDER
TP2 HD/
TP3 CMPST/
TP4 CMPBK/
TP5 FIELD
TP6 VUB
HD/, CMPSY/, CMPBK/, VSYNC/, VD/, VUB/, VRST, VCNTB/, CC CVGRY/
VSEL 0,1, HSEL 0~3, 50/60, SMTST/, SCRST/, LBLH, LBLL, LBWA/, FMSET/
AA, LTHRU/, HCTBK/, HSARE/, LR, DLHCK, HGARE/, HIMG
CC CVGRY/, VGRAY, VCENT, VR/, VING, VGSTR
12MHz
12MHz
VSL/, SSL/, MSL/, HSWEN/, PNS 0.1, HSORG
DAVID 0~5
to EP-3229
RAS, DAV, OE, WE 0~7, CAS 1~4
to EP-3237, EP-3241
E 00/ ~ E 30/
to EP-3236
IDATA 0~7
VID 0~5
HD/
LBD 00~07
LBD 10~17
HND~3
PND~3
LEPD~5
REPD~5
VSMD 0~6
MVID 0~5
SVID 0~5
from EP-3237, EP-3241
MCLK
MSC/
BITMD, RMW/, CLRM/, WRT A,B
MA 0A~3A
MA 0B~3B
from EP-3236
1E00/
ADRS 3~6
DISPB

## 6-17 EP-2729 A/D , D/A

This PCB consists of the A/D CONVERTER, POST PROCESSOR, and D/A CONVERTER.

SIGNAL LIST

J213-1

| A | | B |
|---|---|---|
| GND | 45 | 12MHZ |
| | 44 | |
| | 43 | |
| | 42 | |
| | 41 | |
| GND | 40 | GND |
| | 39 | |
| | 38 | |
| BON/ | 37 | |
| | 36 | DFARE |
| | 35 | |
| | 34 | |
| | 33 | |
| | 32 | |
| | 31 | |
| GND | 30 | GND |
| | 29 | |
| | 28 | |
| | 27 | |
| | 26 | |
| | 25 | |
| | 24 | |
| MRQT/ | 23 | MRDY |
| ADRS8 | 22 | ADRS9 |
| ADRS6 | 21 | ADRS7 |
| GND | 20 | GND |
| ADRS4 | 19 | ADRS5 |
| ADRS2 | 18 | ADRS3 |
| ADRS0 | 17 | ADRS1 |
| DTA6/ | 16 | DTA7/ |
| DTA4/ | 15 | DTA5/ |
| DTA2/ | 14 | DTA3/ |
| DTA0/ | 13 | DTA1/ |
| RAMEN | 12 | E |
| RST/ | 11 | READ |
| GND | 10 | GND |
| HRQ/ | 9 | HAK/ |
| IRQ/ | 8 | IAK/ |
| VCC | 7 | VCC |
| VCC | 6 | VCC |
| VCC | 5 | VCC |
| | 4 | |
| | 3 | |
| GND | 2 | GND |
| GND | 1 | GND |

J213-2

EP-2729*

B/W A/D D/A

| A | | B |
|---|---|---|
| GND | 45 | GND |
| GND | 44 | GND |
| +15V | 43 | +15V |
| -15V | 42 | -15V |
| AGND | 41 | AGND |
| AGND | 40 | USVIDEO |
| POSI | 39 | AGND |
| AGND | 38 | TVB/W |
| NEGA | 37 | AGND |
| VCC | 36 | VCC |
| VCC | 35 | VCC |
| VCC | 34 | VCC |
| B/W4 | 33 | B/W5 |
| | 32 | BWVTRO |
| | 31 | BWVTRI |
| GND | 30 | GND |
| DAI6 | 29 | DAI7 |
| DAI4 | 28 | DAI5 |
| DAI2 | 27 | DAI3 |
| DAI0 | 26 | DAI1 |
| | 25 | |
| DAVID4 | 24 | DAVID5 |
| DAVID2 | 23 | DAVID3 |
| DAVID0 | 22 | DAVID1 |
| 1F00/ | 21 | |
| GND | 20 | GND |
| AD04 | 19 | AD05 |
| AD02 | 18 | AD03 |
| AD00 | 17 | AD01 |
| LDLB/ | 16 | |
| CMPBK/ | 15 | VUB |
| HGRAY/ | 14 | VGRAY/ |
| CMPSY/ | 13 | |
| EERAS/ | 12 | B/WBK/ |
| | 11 | OVLY/ |
| GND | 10 | GND |
| PPM/ | 9 | HD/ |
| | 8 | |
| ENBSY/ | 7 | LTHRU/ |
| +5VA | 6 | -5VA |
| SWPON | 5 | FEND/ |
| | 4 | |
| LDLB/ | 3 | SWPON |
| | 2 | |
| GND | 1 | 12MHZ/ |

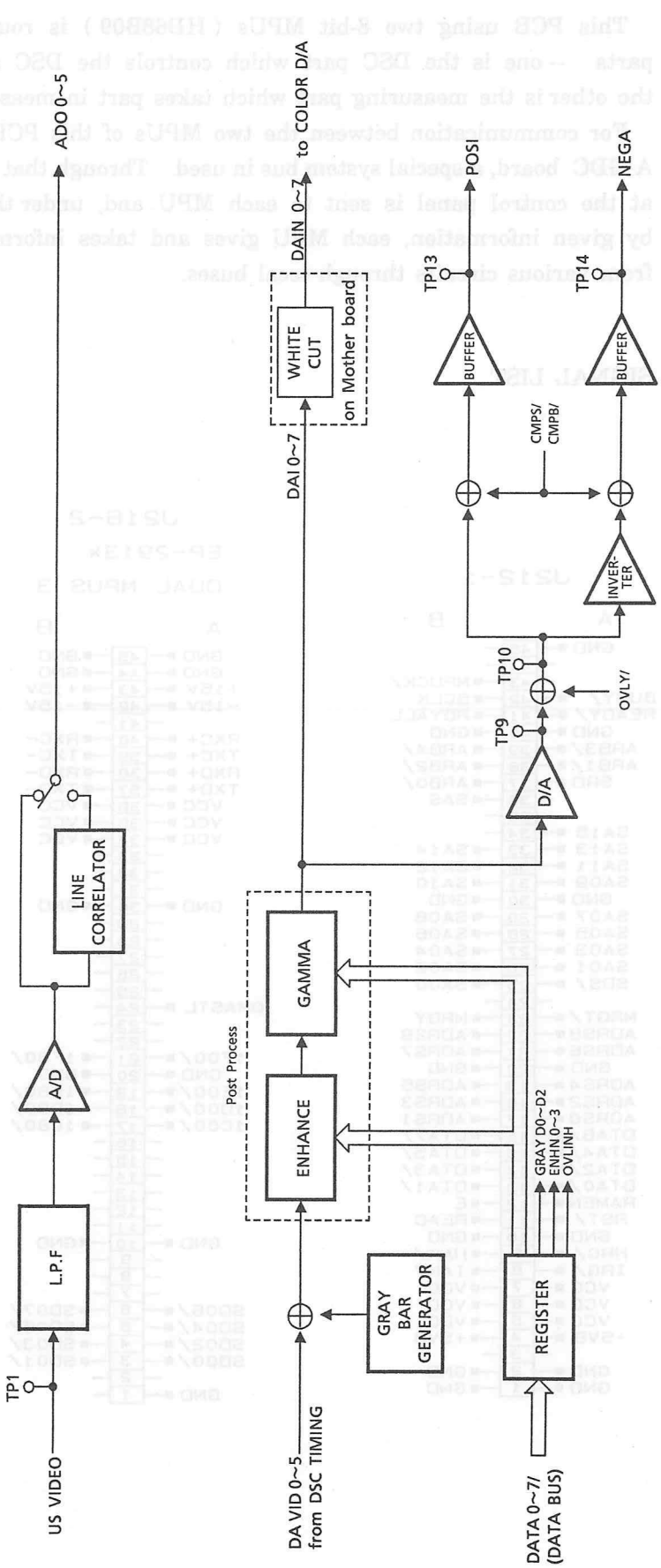


| | | | |
|---|---|---|---|
| Aloka | TITLE 名称 A/D, D/A | MODEL 形名 EP-2729 | 1/1 |

## 6-18 EP-2913 DUAL MPU

This PCB using two 8-bit MPUs ( HD68B09 ) is roughly divided into two parts -- one is the DSC part which controls the DSC and periphery I/O and the other is the measuring part which takes part in measurement.

For communication between the two MPUs of this PCB and the MPU on the A-GDC board, a special system bus in used. Through that bus, information given at the control panel is sent to each MPU and, under the condition determined by given information, each MPU gives and takes information and data to and from various circuits through local buses.

SIGNAL LIST

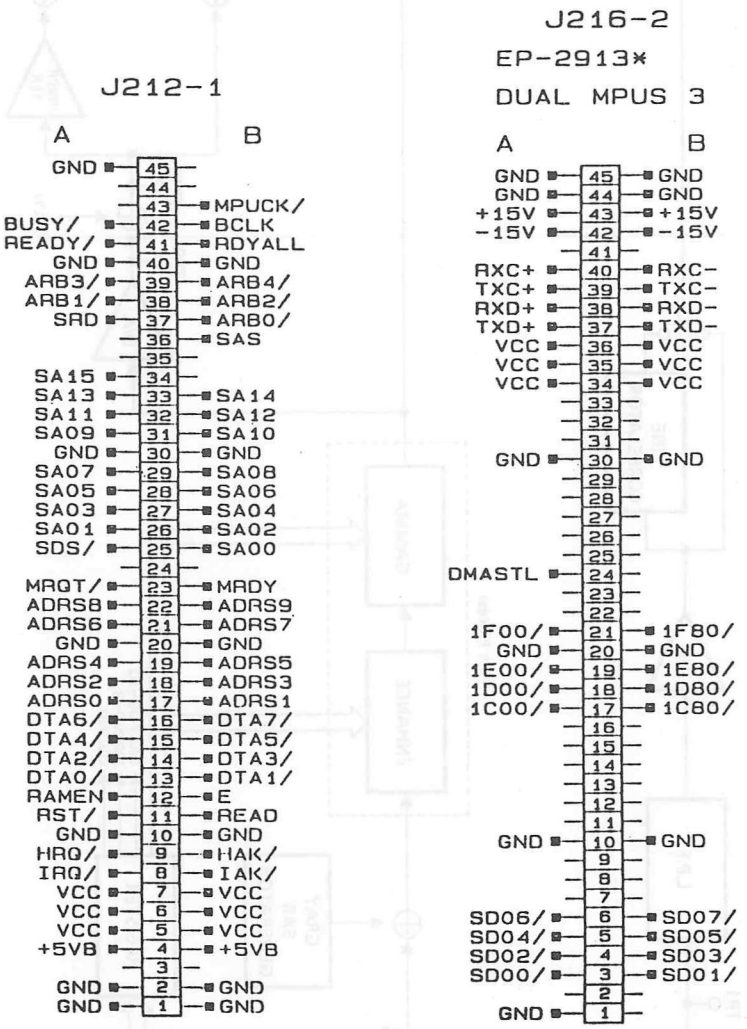

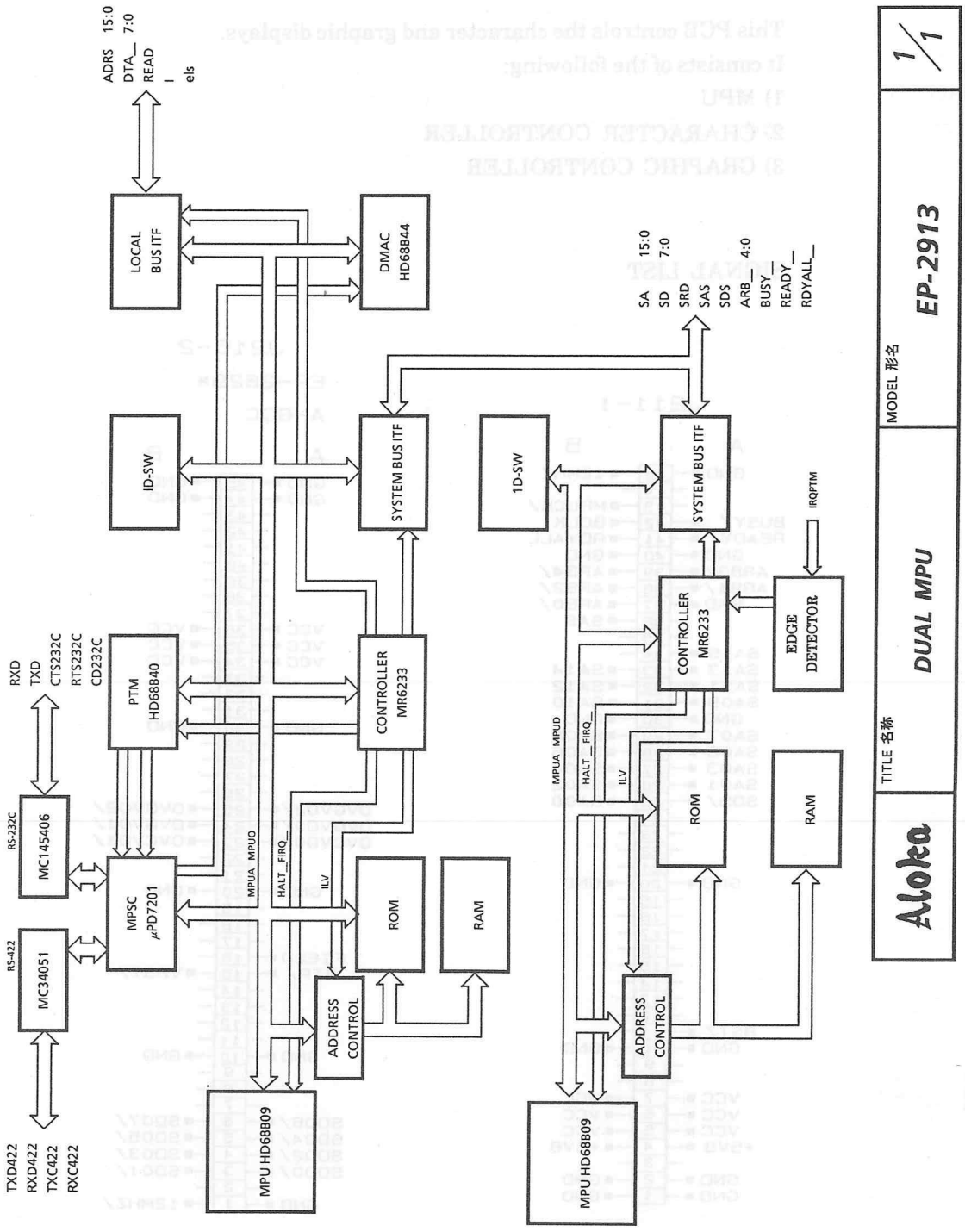
ADRS 15:0
DTA_ 7:0
READ
I
els
LOCAL BUS ITF
DMAC HD68B44
ID-SW
SYSTEM BUS ITF
1D-SW
SYSTEM BUS ITF
SA 15:0
SD 7:0
SRD
SAS
SDS
ARB_ 4:0
BUSY_
READY_
RDYALL_
IRQPTM
RXD
TXD
CTS232C
RTS232C
CD232C
PTM HD68B40
CONTROLLER MR6233
CONTROLLER MR6233
EDGE DETECTOR
RS-232C
MC145406
MPSC μPD7201
MPUA MPUO
HALT_FIRQ_
ILV
ROM
RAM
RS-422
MC34051
ADDRESS CONTROL
MPUA MPUD
HALT_FIRQ_
ILV
ROM
RAM
ADDRESS CONTROL
MPU HD68B09
MPU HD68B09
TXD422
RXD422
TXC422
RXC422
Aloka
TITLE 名称
DUAL MPU
MODEL 形名
EP-2913
1/1

## 6-19 EP-2629 AGDC

This PCB controls the character and graphic displays.
It consists of the following:

1) MPU
2) CHARACTER CONTROLLER
3) GRAPHIC CONTROLLER

### SIGNAL LIST

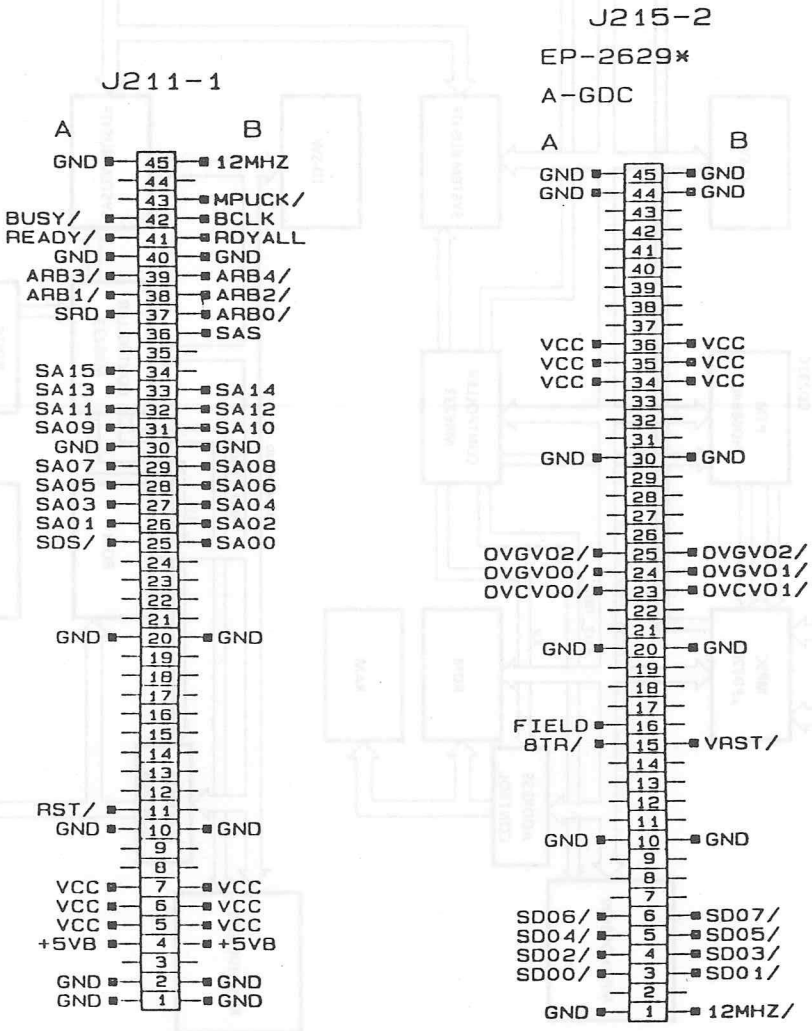

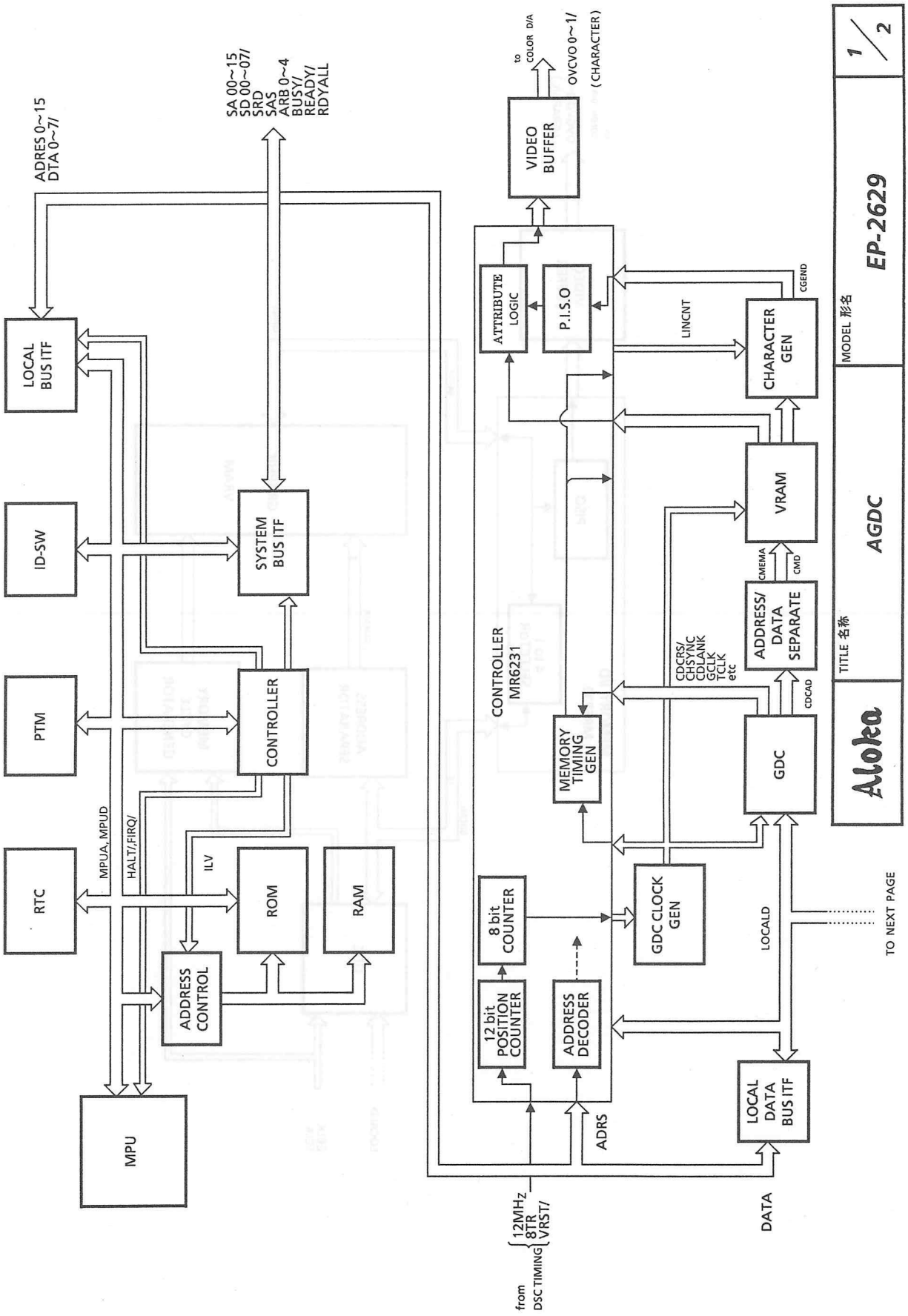
ADRES 0~15
DTA 0~7/
SA 00~15
SD 00~07/
SRD
SAS
ARB 0~4
BUSY/
READY/
RDYALL
LOCAL BUS ITF
ID-SW
PTM
RTC
SYSTEM BUS ITF
CONTROLLER
ROM
RAM
MPUA, MPUD
HALT/,FIRQ/
ILV
ADDRESS CONTROL
MPU
VIDEO BUFFER
to COLOR D/A
OVCV0 0~1/
(CHARACTER)
ATTRIBUTE LOGIC
P.I.S.O
LINCNT
CHARACTER GEN
CGEND
CONTROLLER MR6231
VRAM
CMEMA
CMD
ADDRESS/ DATA SEPARATE
CDCRS/
CHSYNC
CDLANK
GCLK
TCLK
etc
CDCAD
MEMORY TIMING GEN
GDC
8 bit COUNTER
GDC CLOCK GEN
LOCALD
12 bit POSITION COUNTER
ADDRESS DECODER
LOCAL DATA BUS ITF
ADRS
DATA
from DSC TIMING
12MHz
8TR
VRST/
TO NEXT PAGE
MODEL 形名
EP-2629
TITLE 名称
AGDC
Aloka
1/2

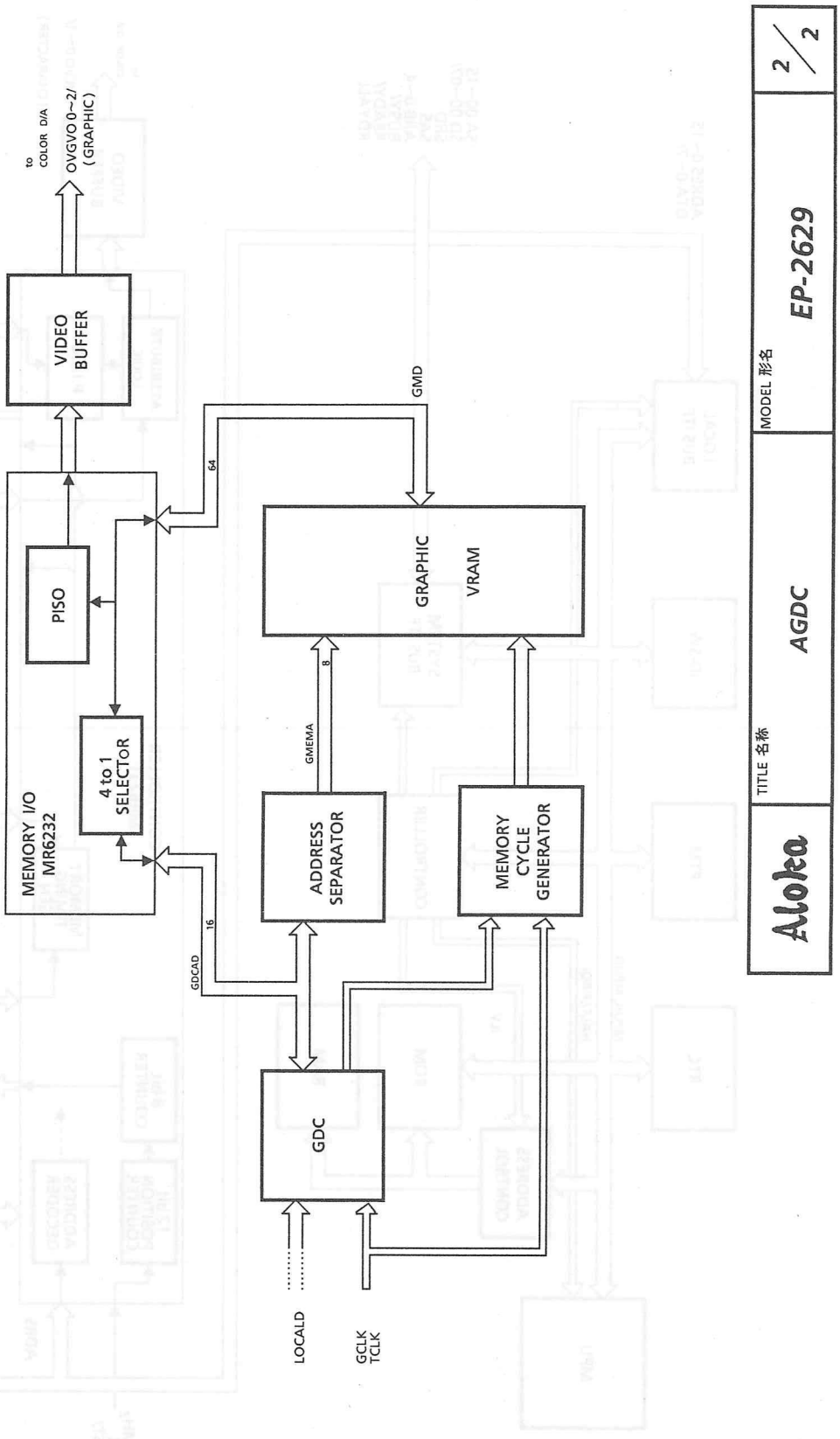
to COLOR D/A
OVGVO 0~2/ (GRAPHIC)
VIDEO BUFFER
GMD
64
PISO
GRAPHIC VRAM
4 to 1 SELECTOR
MEMORY I/O MR6232
GMEMA
8
ADDRESS SEPARATOR
MEMORY CYCLE GENERATOR
GDCAD
16
GDC
LOCALD
GCLK TCLK
Aloka
TITLE 名称
AGDC
MODEL 形名
EP-2629
2/2

## 6-20 EP-3477 US ITF

This PCB consists of the various kinds of circuit such as ROM TABLE, ECHO ERASE, M-MODE TIME MARKER, TRACK BALL READ, and OPTION BOARD DETECTION circuits, which hold information necessary for writing in US signal to the memory.

SIGNAL LIST

J202-1

| A | | B |
|---|---|---|
| GND | 45 | 12MHZ |
| | 44 | |
| SWPON | 43 | SWPON/ |
| DFARE | 42 | LDLB/ |
| | 41 | LEN/ |
| GND | 40 | GND |
| VTRON/ | 39 | |
| | 38 | |
| XCONT/ | 37 | YCONT/ |
| LADR2 | 36 | LADR3 |
| LADR0 | 35 | LADR1 |
| LDAT6/ | 34 | LDAT7/ |
| LDAT4/ | 33 | LDAT5/ |
| LDAT2/ | 32 | LDAT3/ |
| LDAT0/ | 31 | LDAT1/ |
| GND | 30 | GND |
| | 29 | BOFF/ |
| BON/ | 28 | CF0/ |
| F80/ | 27 | |
| | 26 | |
| FEND/ | 25 | |
| | 24 | |
| MRQT/ | 23 | MRDY |
| ADRS8 | 22 | ADRS9 |
| ADRS6 | 21 | ADRS7 |
| GND | 20 | GND |
| ADRS4 | 19 | ADRS5 |
| ADRS2 | 18 | ADRS3 |
| ADRS0 | 17 | ADRS1 |
| DTA6/ | 16 | DTA7/ |
| DTA4/ | 15 | DTA5/ |
| DTA2/ | 14 | DTA3/ |
| DTA0/ | 13 | DTA1/ |
| RAMEN | 12 | E |
| RST/ | 11 | READ |
| GND | 10 | GND |
| HRQ/ | 9 | HAK/ |
| IRQ/ | 8 | IAK/ |
| VCC | 7 | VCC |
| VCC | 6 | VCC |
| VCC | 5 | VCC |
| | 4 | |
| | 3 | |
| GND | 2 | GND |
| GND | 1 | GND |

J202-2

EP-3477*

US I.T.F.

| A | | B |
|---|---|---|
| GND | 45 | GND |
| GND | 44 | GND |
| | 43 | |
| | 42 | |
| COLOREN | 41 | |
| | 40 | |
| | 39 | |
| CINON/ | 38 | ECGON/ |
| ER | 37 | |
| VCC | 36 | VCC |
| VCC | 35 | VCC |
| VCC | 34 | VCC |
| ENBSY/ | 33 | 525/ |
| RTCON/ | 32 | |
| MCLK | 31 | MEND/ |
| GND | 30 | GND |
| MDWEN/ | 29 | EERAS/ |
| | 28 | |
| | 27 | |
| | 26 | |
| | 25 | |
| | 24 | ECGF/ |
| | 23 | |
| | 22 | |
| EFRM | 21 | TRACE/ |
| GND | 20 | GND |
| | 19 | |
| VCD0/ | 18 | VCD1/ |
| USBLK/ | 17 | DFAREA |
| LSTAT/ | 16 | FREND/ |
| DSCA8/ | 15 | |
| DSCA6/ | 14 | DSCA7/ |
| DSCA4/ | 13 | DSCA5/ |
| DSCA2/ | 12 | DSCA3/ |
| DSCA0/ | 11 | DSCA1/ |
| GND | 10 | GND |
| 1F80/ | 9 | HD/ |
| 1E80/ | 8 | |
| 1C00/ | 7 | YMINS/ |
| YPLUS/ | 6 | |
| XMINS/ | 5 | FREZ/ |
| XPLUS/ | 4 | BFRZ/ |
| | 3 | MFREZ/ |
| 1C80/ | 2 | BFREZ/ |
| GND | 1 | 12MHZ/ |

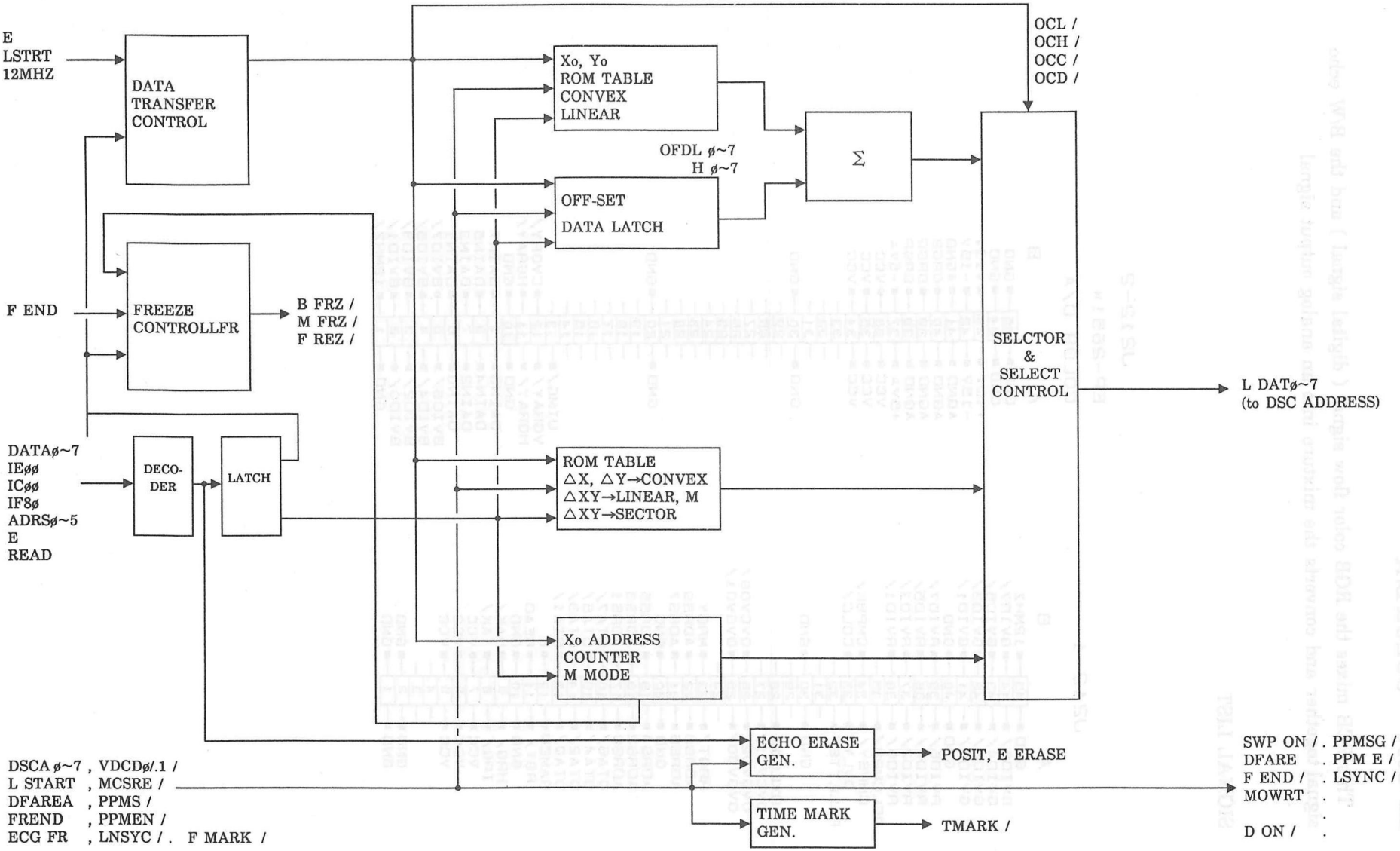


| Aloka | TITLE 名称 US ITF | MODEL 形名 EP-3477 | 1/1 |
|---|---|---|---|

## 6-21 EP-2651 COLOR D/A

This PCB mixes the RGB color flow signal ( digital signal ) and the B/W echo signal together and converts the mixture into an analog output signal.

SIGNAL LIST

J212-1

| A | | B |
|---|---|---|
| GND | 45 | 12MHZ |
| GVID6/ | 44 | GVID7/ |
| GVID4/ | 43 | GVID5/ |
| GVID2/ | 42 | GVID3/ |
| GVID0/ | 41 | GVID1/ |
| GND | 40 | GND |
| RVID6/ | 39 | RVID7/ |
| RVID4/ | 38 | RVID5/ |
| RVID2/ | 37 | RVID3/ |
| RVID0/ | 36 | RVID1/ |
| DELCMPS/ | 35 | |
| CMPSY/ | 34 | CMPBK/ |
| OVLY/ | 33 | COLC/ |
| PALETTE/ | 32 | |
| | 31 | |
| GND | 30 | GND |
| | 29 | |
| OVECG/ | 28 | |
| OVCV01/ | 27 | |
| OVGV02/ | 26 | OVCV00/ |
| OVGV00/ | 25 | OVGV01/ |
| | 24 | |
| MRQT/ | 23 | MRDY |
| ADRS8 | 22 | ADRS9 |
| ADRS6 | 21 | ADRS7 |
| GND | 20 | GND |
| ADRS4 | 19 | ADRS5 |
| ADRS2 | 18 | ADRS3 |
| ADRS0 | 17 | ADRS1 |
| DTA6/ | 16 | DTA7/ |
| DTA4/ | 15 | DTA5/ |
| DTA2/ | 14 | DTA3/ |
| DTA0/ | 13 | DTA1/ |
| RAMEN | 12 | E |
| RST/ | 11 | READ |
| GND | 10 | GND |
| HRQ/ | 9 | HAK/ |
| IRQ/ | 8 | IAK/ |
| VCC | 7 | VCC |
| VCC | 6 | VCC |
| VCC | 5 | VCC |
| | 4 | |
| | 3 | |
| GND | 2 | GND |
| GND | 1 | GND |

J212-2

EP-2651*

COLOR D/A

| A | | B |
|---|---|---|
| GND | 45 | GND |
| GND | 44 | GND |
| +15V | 43 | +15V |
| -15V | 42 | -15V |
| AGND | 41 | AGND |
| AGND | 40 | ORGB |
| AGND | 39 | ORGG |
| AGND | 38 | ORGR |
| +5VA | 37 | -5VA |
| VCC | 36 | VCC |
| VCC | 35 | VCC |
| VCC | 34 | VCC |
| | 33 | |
| | 32 | |
| | 31 | |
| GND | 30 | GND |
| | 29 | |
| | 28 | |
| | 27 | |
| | 26 | |
| | 25 | |
| | 24 | |
| | 23 | |
| | 22 | |
| | 21 | |
| GND | 20 | GND |
| | 19 | |
| | 18 | |
| | 17 | |
| | 16 | |
| | 15 | |
| | 14 | |
| UIMG/ | 13 | |
| VGRAY/ | 12 | CVGRY/ |
| HGRAY/ | 11 | HGRAY/ |
| GND | 10 | GND |
| DAIN6 | 9 | DAIN7 |
| DAIN4 | 8 | DAIN5 |
| DAIN2 | 7 | DAIN3 |
| DAIN0 | 6 | DAIN1 |
| BVID6/ | 5 | BVID7/ |
| BVID4/ | 4 | BVID5/ |
| BVID2/ | 3 | BVID3/ |
| BVID0/ | 2 | BVID1/ |
| GND | 1 | 12MHZ/ |

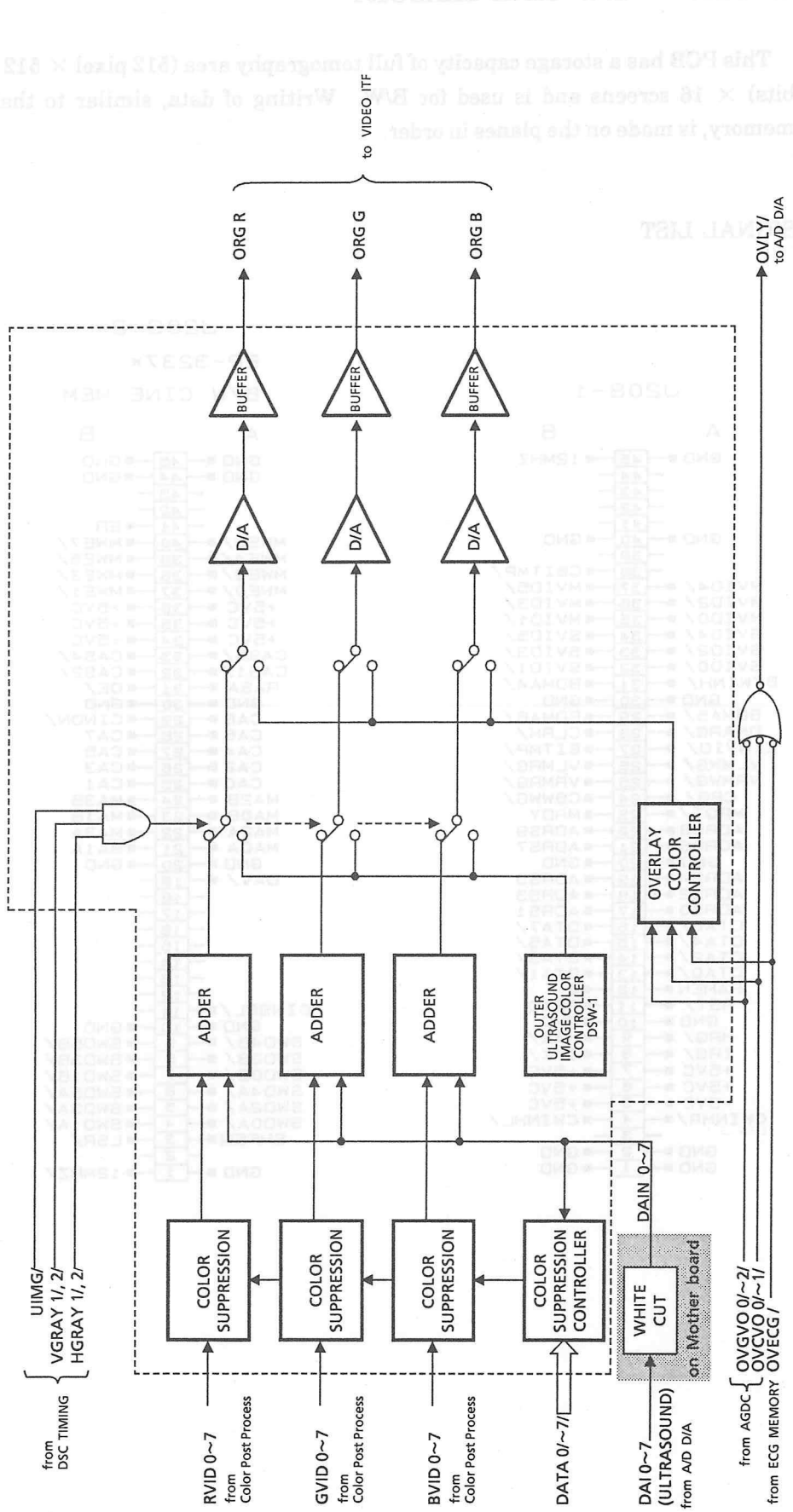


| Aloka | TITLE 名称 COLOR D/A | MODEL 形名 EP-2651 | 1/1 |
|---|---|---|---|

EP-2651* -4: SSD-680EX用、破線内の部品取り付け
For SSD-680EX, Parts in the dot line are mounted.
EP-2651* -3: SSD-680STD用、破線内の部品なし
For SSD-680STD, Parts in the dot line are not mounted.

## 6-22 EP-3237 B/W CINE MEMORY

This PCB has a storage capacity of full tomography area (512 pixel × 512 pixel × 6 bits) × 16 screens and is used for B/W. Writing of data, similar to that of main memory, is made on the planes in order.

SIGNAL LIST

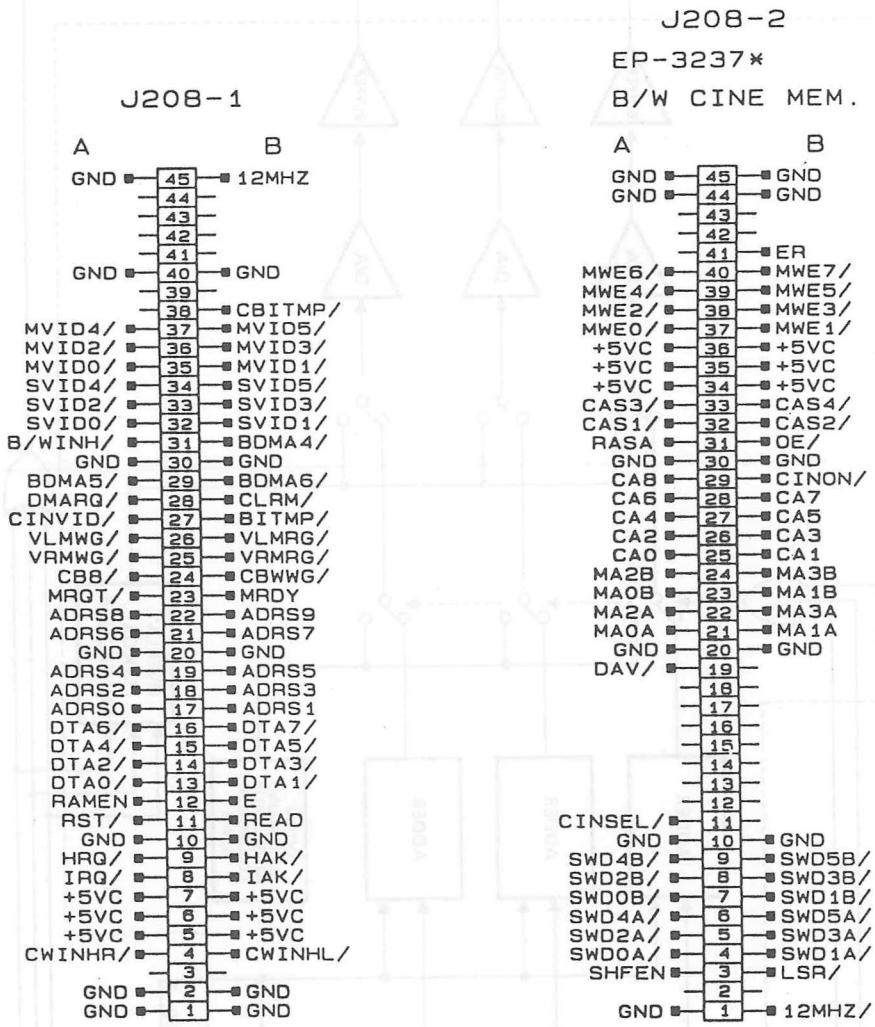

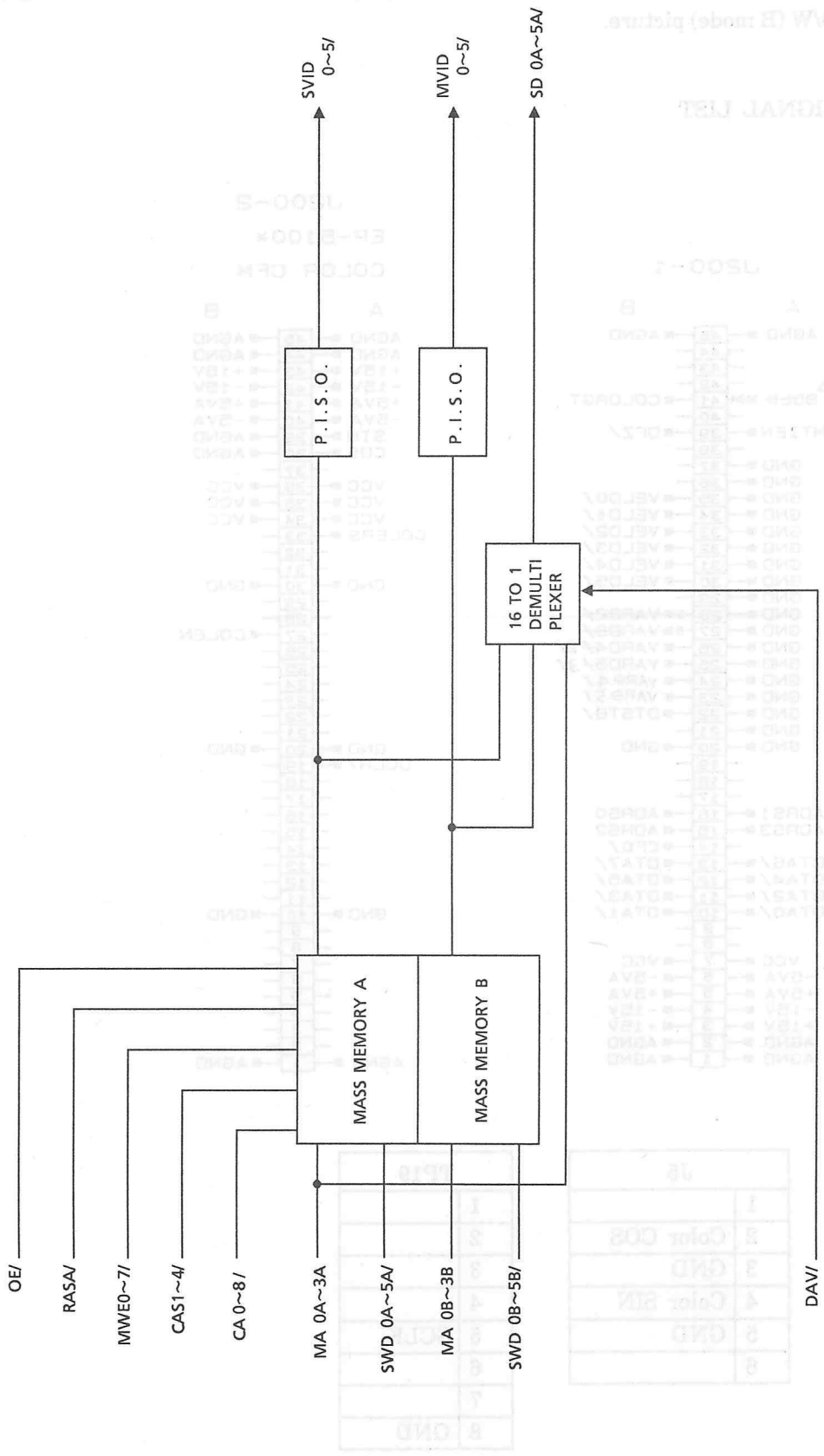


| Aloka | TITLE 名称 B/W CINE MEMORY | MODEL 形名 EP-3237 | 1/1 |
|---|---|---|---|

## 6-23 EP-5100 COLOR FLOW PROCESSOR

This board converts the frequency shifts included in the ultrasound reception signal into color information which is to be displayed, as a two-dimensional image, on the B/W (B mode) picture.

SIGNAL LIST

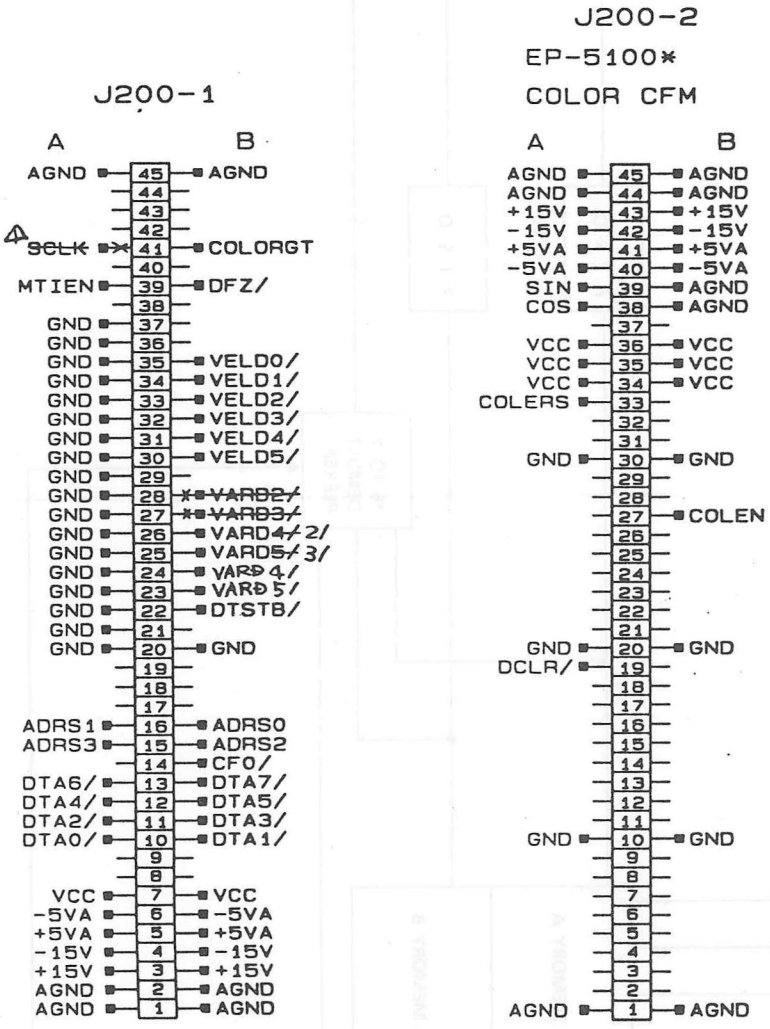


| J5 | |
|---|---|
| 1 | |
| 2 | Color COS |
| 3 | GND |
| 4 | Color SIN |
| 5 | GND |
| 6 | |

| TP19 | |
|---|---|
| 1 | |
| 2 | |
| 3 | |
| 4 | |
| 5 | SCLK |
| 6 | |
| 7 | |
| 8 | GND |

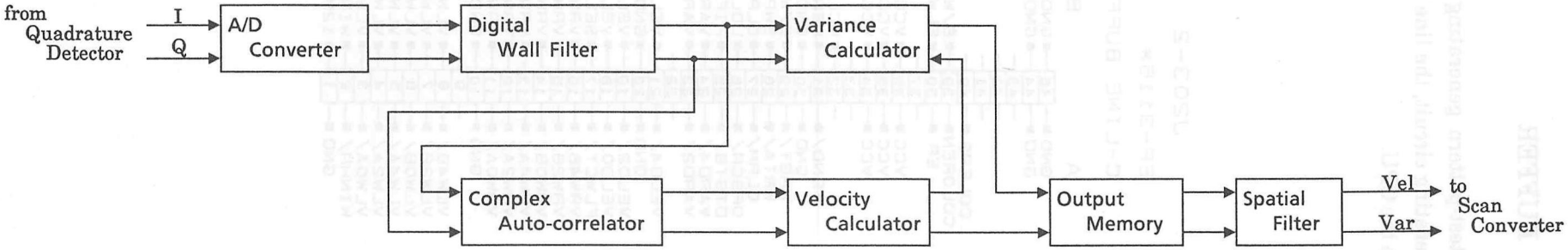


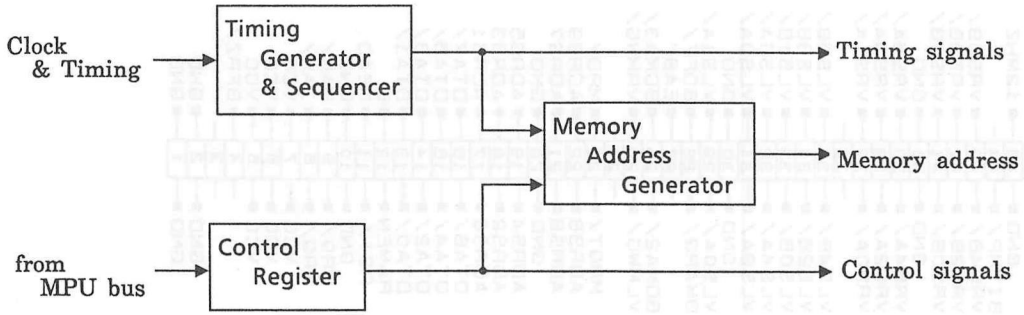


| Aloka | TITLE 名称 COLOR FLOW PROCESSOR | MODEL 形名 EP-5100 | 1/1 |
|---|---|---|---|

## 6-24 EP-3115 COLOR LINE BUFFER

This PCB consists of the color test-pattern generating circuit, the color, B/W position correction delay signal generating circuit, the line buffer, and the interface for direct access to the memory from the CPU.

SIGNAL LIST

J203-1

| A | | | B |
|---|---|---|---|
| GND | 45 | 1 | GND |
| BITMP/ | 44 | 2 | GND |
| VRS4B/ | 43 | 3 | |
| VRS2B/ | 42 | 4 | BFRZ/ |
| VRS0B/ | 41 | 5 | VCC |
| GND | 40 | 6 | VCC |
| VRS4A/ | 39 | 7 | VCC |
| VRS2A/ | 38 | 8 | IAK/ |
| VRS0A/ | 37 | 9 | HAK/ |
| | 36 | 10 | GND |
| VLS4B/ | 35 | 11 | READ |
| VLS2B/ | 34 | 12 | E |
| VLS0B/ | 33 | 13 | DTA1/ |
| VLS4A/ | 32 | 14 | DTA3/ |
| VLS2A/ | 31 | 15 | DTA5/ |
| GND | 30 | 16 | DTA7/ |
| VLS0A/ | 29 | 17 | ADRS1 |
| DMARQ/ | 28 | 18 | ADRS3 |
| | 27 | 19 | ADRS5 |
| BDMA2/ | 26 | 20 | GND |
| VLMWG/ | 25 | 21 | ADRS7 |
| | 24 | 22 | ADRS9 |
| MRQT/ | 23 | 23 | MRDY |
| ADRS8 | 22 | 24 | |
| ADRS6 | 21 | 25 | VRMWG/ |
| GND | 20 | 26 | BDMA3/ |
| ADRS4 | 19 | 27 | EA8/ |
| ADRS2 | 18 | 28 | BOFF/ |
| ADRS0 | 17 | 29 | VLS1A/ |
| DTA6/ | 16 | 30 | GND |
| DTA4/ | 15 | 31 | VLS3A/ |
| DTA2/ | 14 | 32 | VLS5A/ |
| DTA0/ | 13 | 33 | VLS1B/ |
| RAMEN | 12 | 34 | VLS3B/ |
| RST/ | 11 | 35 | VLS5B/ |
| GND | 10 | 36 | |
| HRQ/ | 9 | 37 | VRS1A/ |
| IRQ/ | 8 | 38 | VRS3A/ |
| VCC | 7 | 39 | VRS5A/ |
| VCC | 6 | 40 | GND |
| VCC | 5 | 41 | VRS1B/ |
| | 4 | 42 | VRS3B/ |
| | 3 | 43 | VRS5B/ |
| GND | 2 | 44 | |
| GND | 1 | 45 | 12MHZ |

J203-2

EP-3115*

C-LINE BUFFER

| A | | | B |
|---|---|---|---|
| GND | 45 | 1 | 12MHZ/ |
| GND | 44 | 2 | WINHL/ |
| | 43 | 3 | VLW1A/ |
| | 42 | 4 | VLW3A/ |
| | 41 | 5 | VLW5A/ |
| COLERS | 40 | 6 | VLW1B/ |
| COLOREN | 39 | 7 | VLW3B/ |
| ER | 38 | 8 | VLW5B/ |
| | 37 | 9 | |
| VCC | 36 | 10 | GND |
| VCC | 35 | 11 | VRW1A/ |
| VCC | 34 | 12 | VRW3A/ |
| | 33 | 13 | VRW5A/ |
| | 32 | 14 | VRW1B/ |
| FEND/ | 31 | 15 | VRW3B/ |
| GND | 30 | 16 | VRW5B/ |
| WRGT/ | 29 | 17 | SELB |
| WRTA/ | 28 | 18 | VELD1/ |
| CLRM/ | 27 | 19 | VELD3/ |
| OFSCR/ | 26 | 20 | GND |
| DTSTB/ | 25 | 21 | VELD5/ |
| VARD4/ | 24 | 22 | |
| VARD2/ | 23 | 23 | VARD3/ |
| | 22 | 24 | VARD5/ |
| VELD4/ | 21 | 25 | FIFMTY |
| GND | 20 | 26 | LDLB/ |
| VELD2/ | 19 | 27 | CLRLB/ |
| VELD0/ | 18 | 28 | SWPON |
| FLWCT/ | 17 | 29 | B/WINH/ |
| VRW4B/ | 16 | 30 | GND |
| VRW2B/ | 15 | 31 | MEND/ |
| VRW0B/ | 14 | 32 | MCLK |
| VRW4A/ | 13 | 33 | |
| VRW2A/ | 12 | 34 | VCC |
| VRW0A/ | 11 | 35 | VCC |
| GND | 10 | 36 | VCC |
| | 9 | 37 | |
| VLW4B/ | 8 | 38 | FLWAREA |
| VLW2B/ | 7 | 39 | B/WEN |
| VLW0B/ | 6 | 40 | |
| VLW4A/ | 5 | 41 | |
| VLW2A/ | 4 | 42 | |
| VLW0A/ | 3 | 43 | |
| WINHR/ | 2 | 44 | GND |
| GND | 1 | 45 | GND |

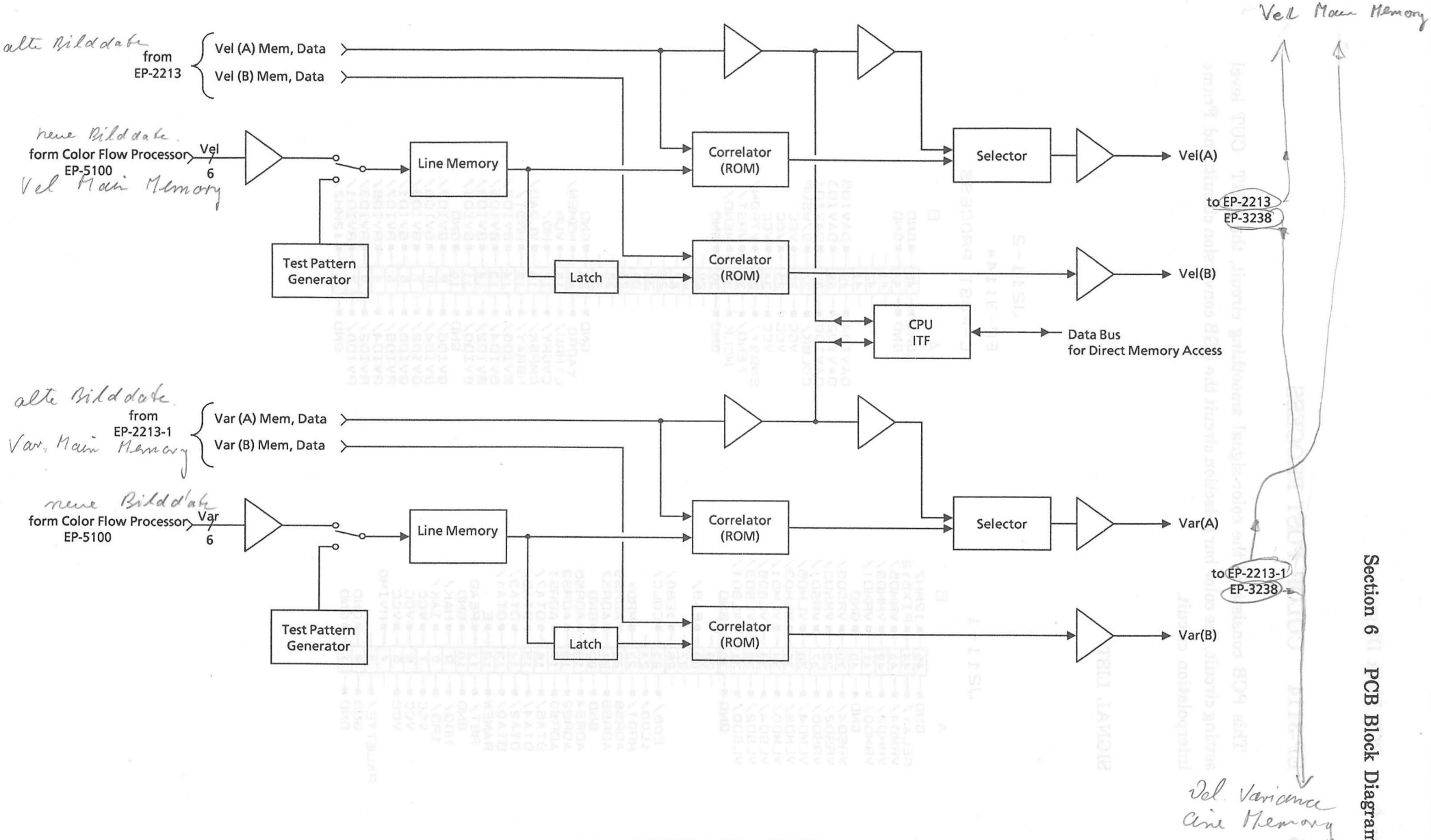


| Aloka | TITLE 名称 COLOR LINE BUFFER | MODEL 形名 EP-3115 | 1/1 |
|---|---|---|---|

## 6-25 EP-3114 COLOR POST PROCESS

This PCB consists of the color-signal smoothing circuit, the WHT CUT level setting circuit, the color bar selection circuit the RGB conversion circuit, and Frame interpolation circuit.

SIGNAL LIST

J211-1

| A | | B |
|---|---|---|
| GND | 45 | 12MHZ |
| RELAY/ | 44 | PIX512 |
| VRMD4/ | 43 | VRMD5/ |
| VRMD2/ | 42 | VRMD3/ |
| VRMD0/ | 41 | VRMD1/ |
| GND | 40 | GND |
| VRSD4/ | 39 | VRSD5/ |
| VRSD2/ | 38 | VRSD3/ |
| VRSD0/ | 37 | VRSD1/ |
| VLMD4/ | 36 | VLMD5/ |
| VLMD2/ | 35 | VLMD3/ |
| VLMD0/ | 34 | VLMD1/ |
| VLSD4/ | 33 | VLSD5/ |
| VLSD2/ | 32 | VLSD3/ |
| VLSD0/ | 31 | VLSD1/ |
| GND | 30 | GND |
| | 29 | |
| | 28 | EA8/ |
| | 27 | |
| | 26 | 1E80/ |
| E00/ | 25 | COLC/ |
| 1C00/ | 24 | |
| MRQT/ | 23 | MRDY |
| ADRS8 | 22 | ADRS9 |
| ADRS6 | 21 | ADRS7 |
| GND | 20 | GND |
| ADRS4 | 19 | ADRS5 |
| ADRS2 | 18 | ADRS3 |
| ADRS0 | 17 | ADRS1 |
| DTA6/ | 16 | DTA7/ |
| DTA4/ | 15 | DTA5/ |
| DTA2/ | 14 | DTA3/ |
| DTA0/ | 13 | DTA1/ |
| RAMEN | 12 | E |
| RST/ | 11 | READ |
| GND | 10 | GND |
| HRQ/ | 9 | HAK/ |
| IRQ/ | 8 | IAK/ |
| VCC | 7 | VCC |
| VCC | 6 | VCC |
| VCC | 5 | VCC |
| | 4 | HVIMG |
| PALETTE/ | 3 | |
| GND | 2 | GND |
| GND | 1 | GND |

J211-2

EP-3114*

C-POST PROCESS

| A | | B |
|---|---|---|
| GND | 45 | GND |
| GND | 44 | GND |
| | 43 | |
| | 42 | |
| | 41 | |
| DAVID4 | 40 | DAVID5 |
| DAVID2 | 39 | DAVID3 |
| DAVID0 | 38 | DAVID1 |
| COLBK/ | 37 | B/WSUP |
| VCC | 36 | VCC |
| VCC | 35 | VCC |
| VCC | 34 | VCC |
| ENBSY/ | 33 | VTRON/ |
| FEND/ | 32 | VRST/ |
| MCLK | 31 | MEND/ |
| GND | 30 | GND |
| | 29 | |
| | 28 | |
| | 27 | |
| | 26 | |
| | 25 | |
| | 24 | |
| | 23 | |
| | 22 | |
| | 21 | |
| GND | 20 | GND |
| YADR0 | 19 | HSMEN/ |
| LTHRU/ | 18 | VUB |
| CVGRY/ | 17 | HD/ |
| CMPBK/ | 16 | VLOAD/ |
| HGRAY/ | 15 | HRST/ |
| BVID6/ | 14 | BVID7/ |
| BVID4/ | 13 | BVID5/ |
| BVID2/ | 12 | BVID3/ |
| BVID0/ | 11 | BVID1/ |
| GND | 10 | GND |
| GVID6/ | 9 | GVID7/ |
| GVID4/ | 8 | GVID5/ |
| GVID2/ | 7 | GVID3/ |
| GVID0/ | 6 | GVID1/ |
| RVID6/ | 5 | RVID7/ |
| RVID4/ | 4 | RVID5/ |
| RVID2/ | 3 | RVID3/ |
| RVID0/ | 2 | RVID1/ |
| GND | 1 | 12MHZ/ |

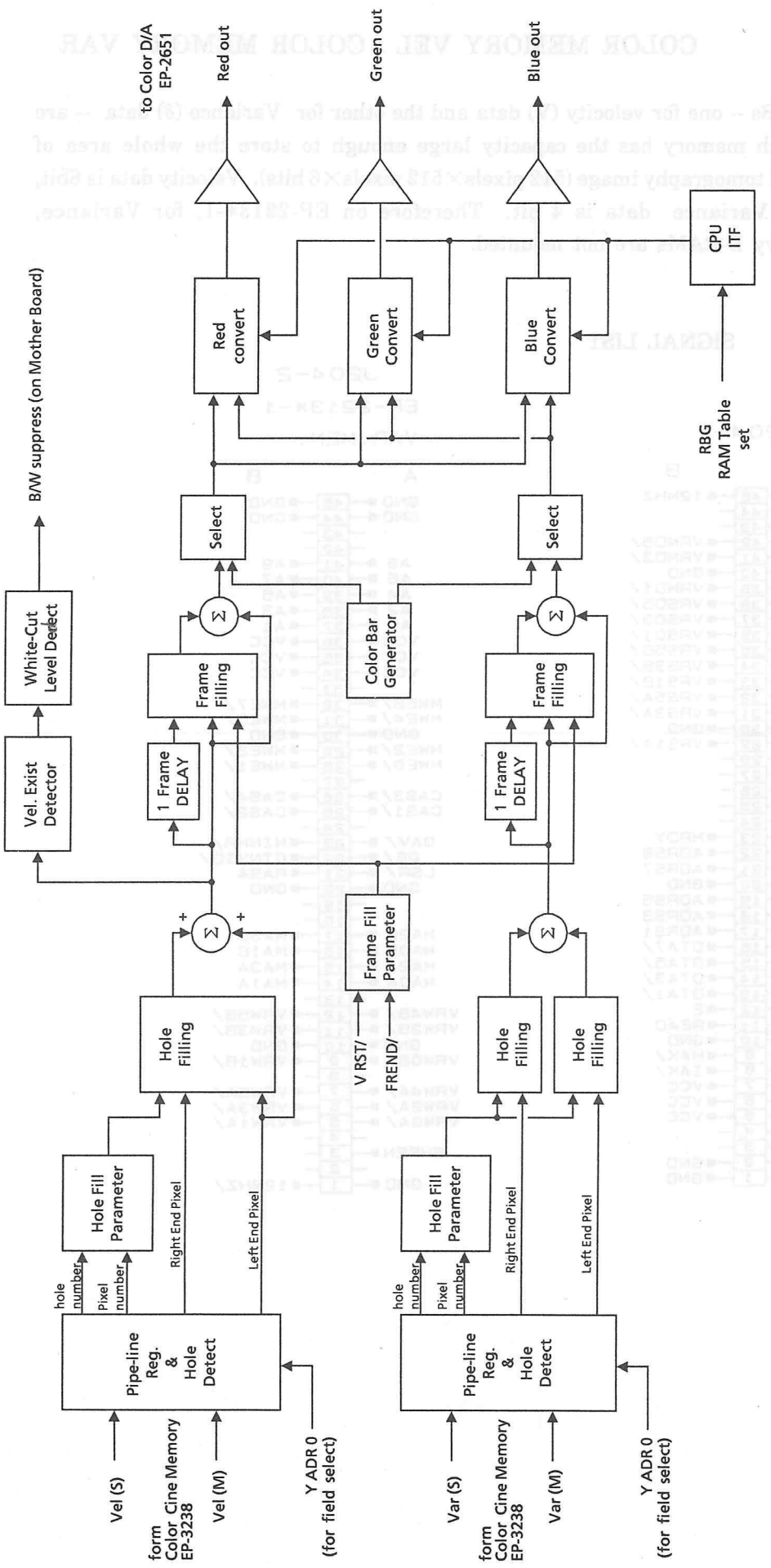


| Aloka | TITLE 名称 COLOR POST PROCESS | MODEL 形名 EP-3114 | 1/1 |
|---|---|---|---|

## 6-26 EP-2213 COLOR MEMORY VEL / COLOR MEMORY VAR

Two PCBs -- one for velocity (V) data and the other for Variance ($\delta$) data -- are used. Each memory has the capacity large enough to store the whole area of ultrasound tomography image (512 pixels×512 pixels×6 bits). Velocity data is 6bit, however Variance data is 4 bit. Therefore on EP-2213*-1, for Variance, unnecessary D-RAMs are not mounted.

EP-2213 SIGNAL LIST

J204-1

| A | | B |
|---|---|---|
| GND | 45 | 12MHZ |
| | 44 | |
| | 43 | |
| VRMD4/ | 42 | VRMD5/ |
| VRMD2/ | 41 | VRMD3/ |
| GND | 40 | GND |
| VRMD0/ | 39 | VRMD1/ |
| VRSD4/ | 38 | VRSD5/ |
| VRSD2/ | 37 | VRSD3/ |
| VRSD0/ | 36 | VRSD1/ |
| VRS4B/ | 35 | VRS5B/ |
| VRS2B/ | 34 | VRS3B/ |
| VRS0B/ | 33 | VRS1B/ |
| VRS4A/ | 32 | VRS5A/ |
| VRS2A/ | 31 | VRS3A/ |
| GND | 30 | GND |
| VRS0A/ | 29 | VRS1A/ |
| | 28 | |
| | 27 | |
| | 26 | |
| | 25 | |
| | 24 | |
| MRQT/ | 23 | MRDY |
| ADRS8 | 22 | ADRS9 |
| ADRS6 | 21 | ADRS7 |
| GND | 20 | GND |
| ADRS4 | 19 | ADRS5 |
| ADRS2 | 18 | ADRS3 |
| ADRS0 | 17 | ADRS1 |
| DTA6/ | 16 | DTA7/ |
| DTA4/ | 15 | DTA5/ |
| DTA2/ | 14 | DTA3/ |
| DTA0/ | 13 | DTA1/ |
| RAMEN | 12 | E |
| RST/ | 11 | READ |
| GND | 10 | GND |
| HRQ/ | 9 | HAK/ |
| IRQ/ | 8 | IAK/ |
| VCC | 7 | VCC |
| VCC | 6 | VCC |
| VCC | 5 | VCC |
| | 4 | |
| | 3 | |
| GND | 2 | GND |
| GND | 1 | GND |

J204-2

EP-2213*-1

VAR.MEM.

| A | | B |
|---|---|---|
| GND | 45 | GND |
| GND | 44 | GND |
| | 43 | |
| | 42 | |
| A8 | 41 | A9 |
| A6 | 40 | A7 |
| A4 | 39 | A5 |
| A2 | 38 | A3 |
| A0 | 37 | A1 |
| VCC | 36 | VCC |
| VCC | 35 | VCC |
| VCC | 34 | VCC |
| | 33 | |
| MWE6/ | 32 | MWE7/ |
| MWE4/ | 31 | MWE5/ |
| GND | 30 | GND |
| MWE2/ | 29 | MWE3/ |
| MWE0/ | 28 | MWE1/ |
| | 27 | |
| CAS3/ | 26 | CAS4/ |
| CAS1/ | 25 | CAS2/ |
| | 24 | |
| DAV/ | 23 | WINHR/ |
| OE/ | 22 | CINVID/ |
| LSR/ | 21 | RASA |
| GND | 20 | GND |
| | 19 | |
| | 18 | |
| MA2B | 17 | MA3B |
| MA0B | 16 | MA1B |
| MA2A | 15 | MA3A |
| MA0A | 14 | MA1A |
| | 13 | |
| VRW4B/ | 12 | VRW5B/ |
| VRW2B/ | 11 | VRW3B/ |
| GND | 10 | GND |
| VRW0B/ | 9 | VRW1B/ |
| | 8 | |
| VRW4A/ | 7 | VRW5A/ |
| VRW2A/ | 6 | VRW3A/ |
| VRW0A/ | 5 | VRW1A/ |
| | 4 | |
| SHFEN | 3 | |
| | 2 | |
| GND | 1 | 12MHZ/ |

## EP-2213-1 SIGNAL LIST

J205-1

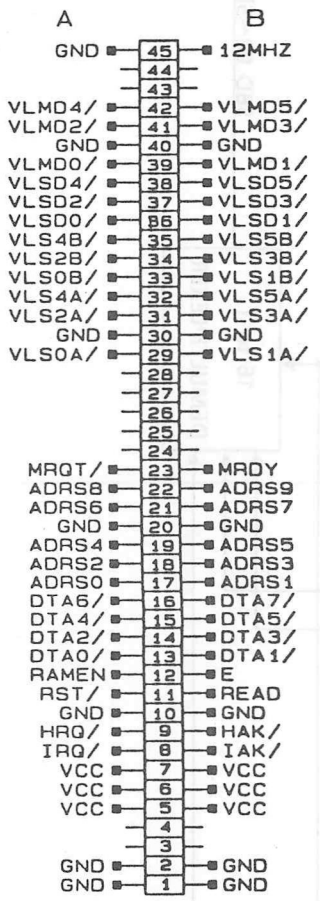


J205-2

EP-2213*

VEL.MEM.

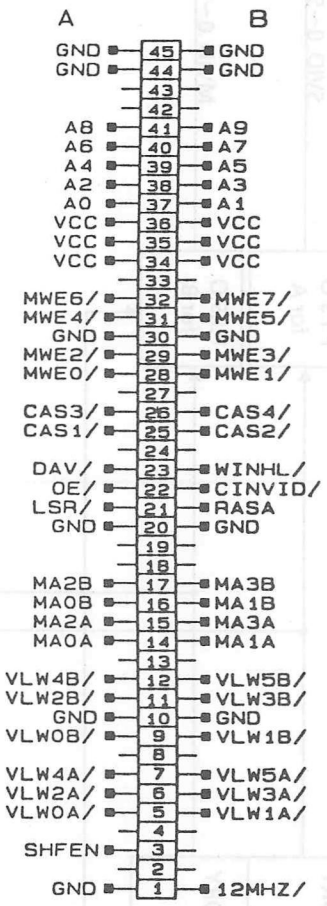

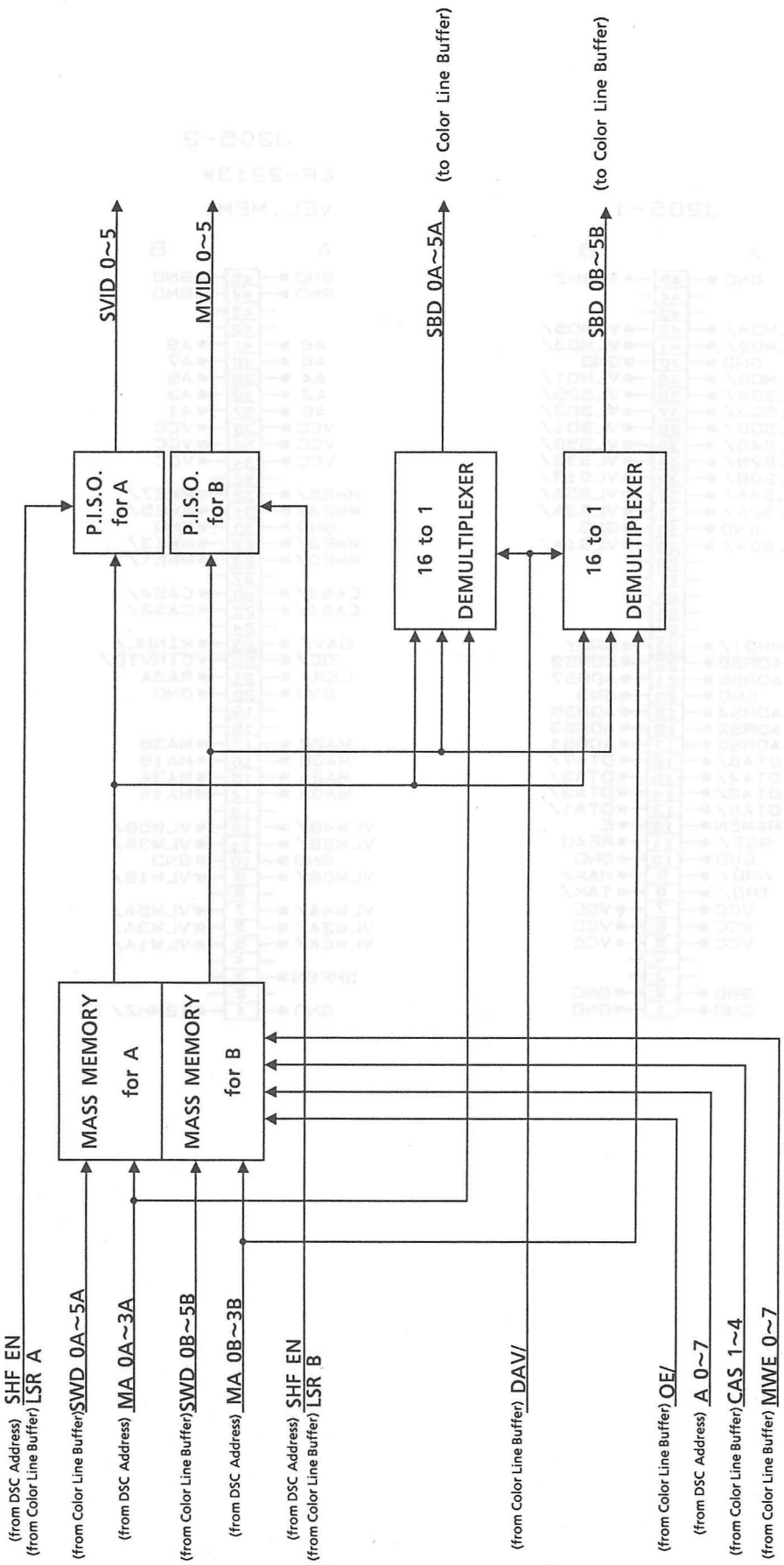


EP-2213* : for Velocity
EP-2213*-1 : for Variance

| Aloka | TITLE 名称 COLOR MEMORY VEL COLOR MEMORY VAR | MODEL 形名 EP-2213 EP-2213 -1 | 1/1 |
|---|---|---|---|

## 6-27 EP-3238 COLOR CINE MEMORY

This PCB has Cine memory for both velocity and variance. The memory capacity is 512pixels×512pixels×6bits×16planes for velocity, and 512pixels ×512pixels ×4bits ×16planes for variance. Writing of data, similar to that of Color memory , is made on the planes in order.

SIGNAL LIST

J206-1

| A | | B |
|---|---|---|
| GND | 45 | 12MHZ |
| VRMD4/ | 44 | VRMD5/ |
| VRMD2/ | 43 | VRMD3/ |
| VRMD0/ | 42 | VRMD1/ |
| VRSD4/ | 41 | VRSD5/ |
| GND | 40 | GND |
| VRSD2/ | 39 | VRSD3/ |
| VRSD0/ | 38 | VRSD1/ |
| VLMD4/ | 37 | VLMD5/ |
| VLMD2/ | 36 | VLMD3/ |
| VLMD0/ | 35 | VLMD1/ |
| VLSD4/ | 34 | VLSD5/ |
| VLSD2/ | 33 | VLSD3/ |
| VLSD0/ | 32 | VLSD1/ |
| WINHL/ | 31 | WINHR/ |
| GND | 30 | GND |
| | 29 | |
| DMARQ/ | 28 | CLRM/ |
| CINVID/ | 27 | CBITMP/ |
| VLMWG/ | 26 | VLMRG/ |
| VRMWG/ | 25 | VRMRG/ |
| | 24 | |
| MRQT/ | 23 | MRDY |
| ADRS8 | 22 | ADRS9 |
| ADRS6 | 21 | ADRS7 |
| GND | 20 | GND |
| ADRS4 | 19 | ADRS5 |
| ADRS2 | 18 | ADRS3 |
| ADRS0 | 17 | ADRS1 |
| DTA6/ | 16 | DTA7/ |
| DTA4/ | 15 | DTA5/ |
| DTA2/ | 14 | DTA3/ |
| DTA0/ | 13 | DTA1/ |
| RAMEN | 12 | E |
| RST/ | 11 | READ |
| GND | 10 | GND |
| HRQ/ | 9 | HAK/ |
| IRQ/ | 8 | IAK/ |
| +5VC | 7 | +5VC |
| +5VC | 6 | +5VC |
| +5VC | 5 | +5VC |
| CWINHR/ | 4 | CWINHL/ |
| | 3 | |
| GND | 2 | GND |
| GND | 1 | GND |

J206-2

EP-3238*

COL.CINE MEM.

| A | | B |
|---|---|---|
| GND | 45 | GND |
| GND | 44 | GND |
| | 43 | |
| | 42 | |
| | 41 | |
| MWE6/ | 40 | MWE7/ |
| MWE4/ | 39 | MWE5/ |
| MWE2/ | 38 | MWE3/ |
| MWE0/ | 37 | MWE1/ |
| +5VC | 36 | +5VC |
| +5VC | 35 | +5VC |
| +5VC | 34 | +5VC |
| CAS3/ | 33 | CAS4/ |
| CAS1/ | 32 | CAS2/ |
| RASA | 31 | OE/ |
| GND | 30 | GND |
| CA8 | 29 | |
| CA6 | 28 | CA7 |
| CA4 | 27 | CA5 |
| CA2 | 26 | CA3 |
| CA0 | 25 | CA1 |
| MA2B | 24 | MA3B |
| MA0B | 23 | MA1B |
| MA2A | 22 | MA3A |
| MA0A | 21 | MA1A |
| GND | 20 | GND |
| DAV/ | 19 | |
| | 18 | |
| | 17 | |
| VRW4B/ | 16 | VRW5B/ |
| VRW2B/ | 15 | VRW3B/ |
| VRW0B/ | 14 | VRW1B/ |
| VRW4A/ | 13 | VRW5A/ |
| VRW2A/ | 12 | VRW3A/ |
| VRW0A/ | 11 | VRW1A/ |
| GND | 10 | GND |
| VLW4B/ | 9 | VLW5B/ |
| VLW2B/ | 8 | VLW3B/ |
| VLW0B/ | 7 | VLW1B/ |
| VLW4A/ | 6 | VLW5A/ |
| VLW2A/ | 5 | VLW3A/ |
| VLW0A/ | 4 | VLW1A/ |
| SHFEN | 3 | LSR/ |
| | 2 | |
| GND | 1 | 12MHZ/ |

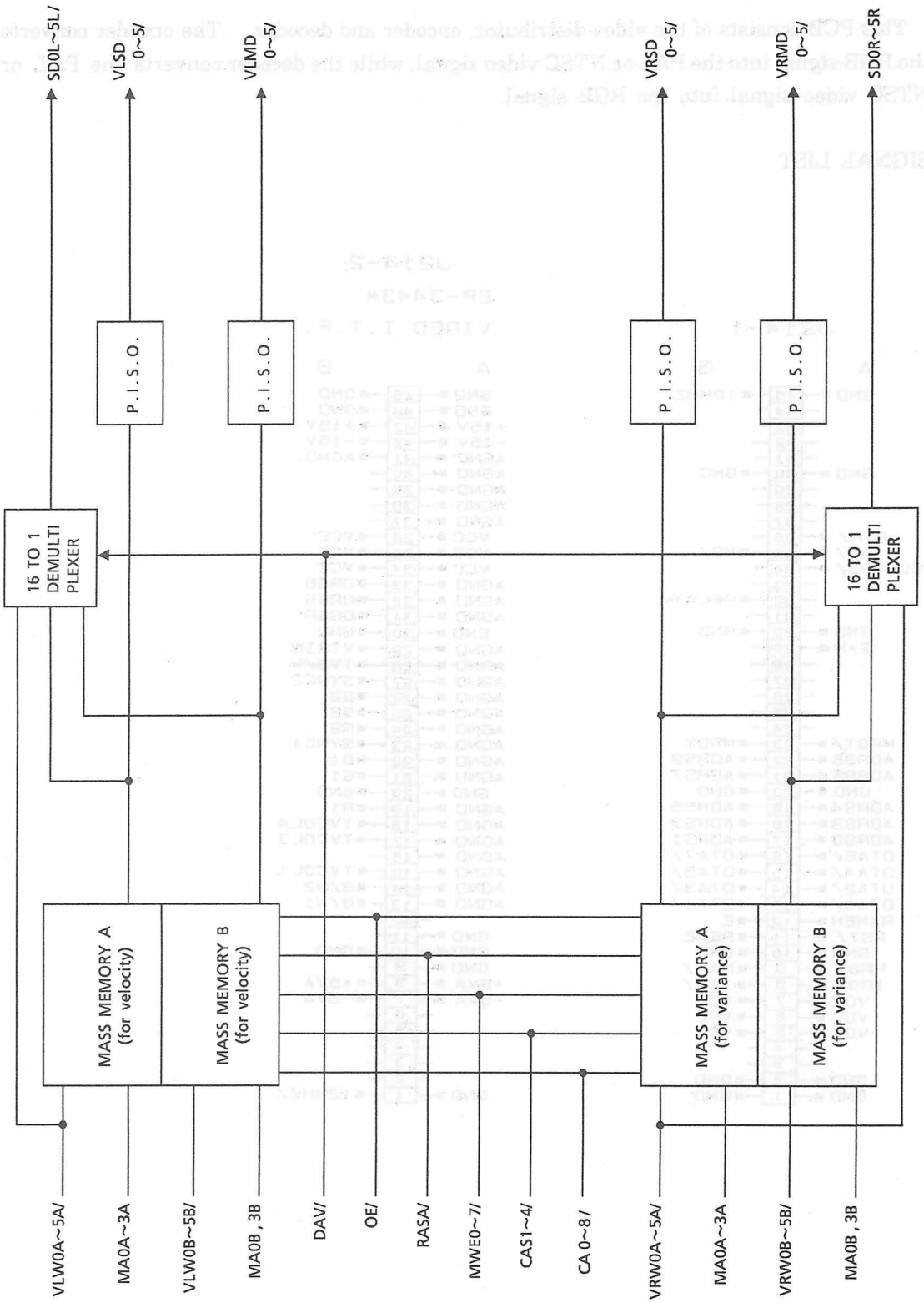


| | | | |
|---|---|---|---|
| Aloka | TITLE 名称 COLOR CINE MEMORY | MODEL 形名 EP-3238 | 1/1 |

## 6-28 EP-3443 VIDEO ITF

This PCB consists of the video distributor, encoder and decoder. The encoder converts the RGB signal into the PAL or NTSC video signal, while the decoder converts the PAL or NTSC video signal into the RGB signal.

SIGNAL LIST

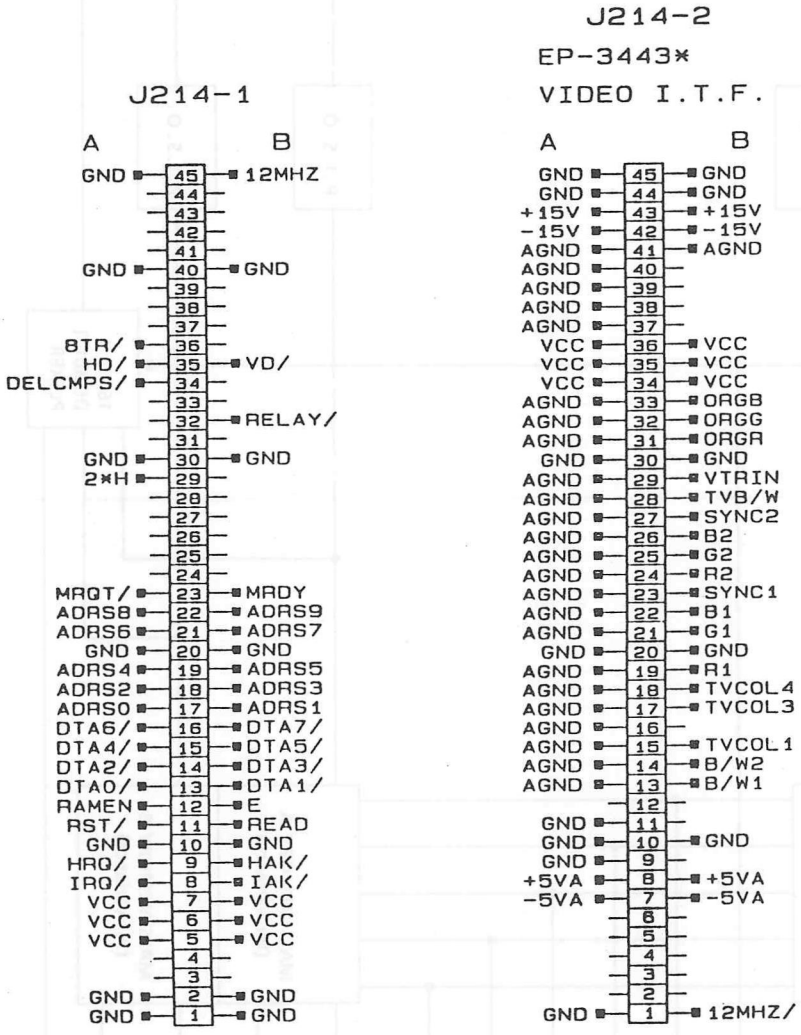

| J1 | |
|---|---|
| 1 | SYNC3 |
| 2 | GND |
| 3 | B3 |
| 4 | GND |
| 5 | G3 |
| 6 | GND |
| 7 | R3 |
| 8 | GND |

| J2 | |
|---|---|
| 1 | GND |
| 2 | C2 OUT |
| 3 | GND |
| 4 | Y2 OUT |
| 5 | GND |
| 6 | C1 OUT |
| 7 | GND |
| 8 | Y1 OUT |
| 9 | GND |

| J3 | |
|---|---|
| 1 | GND |
| 2 | C IN |
| 3 | GND |
| 4 | Y IN |

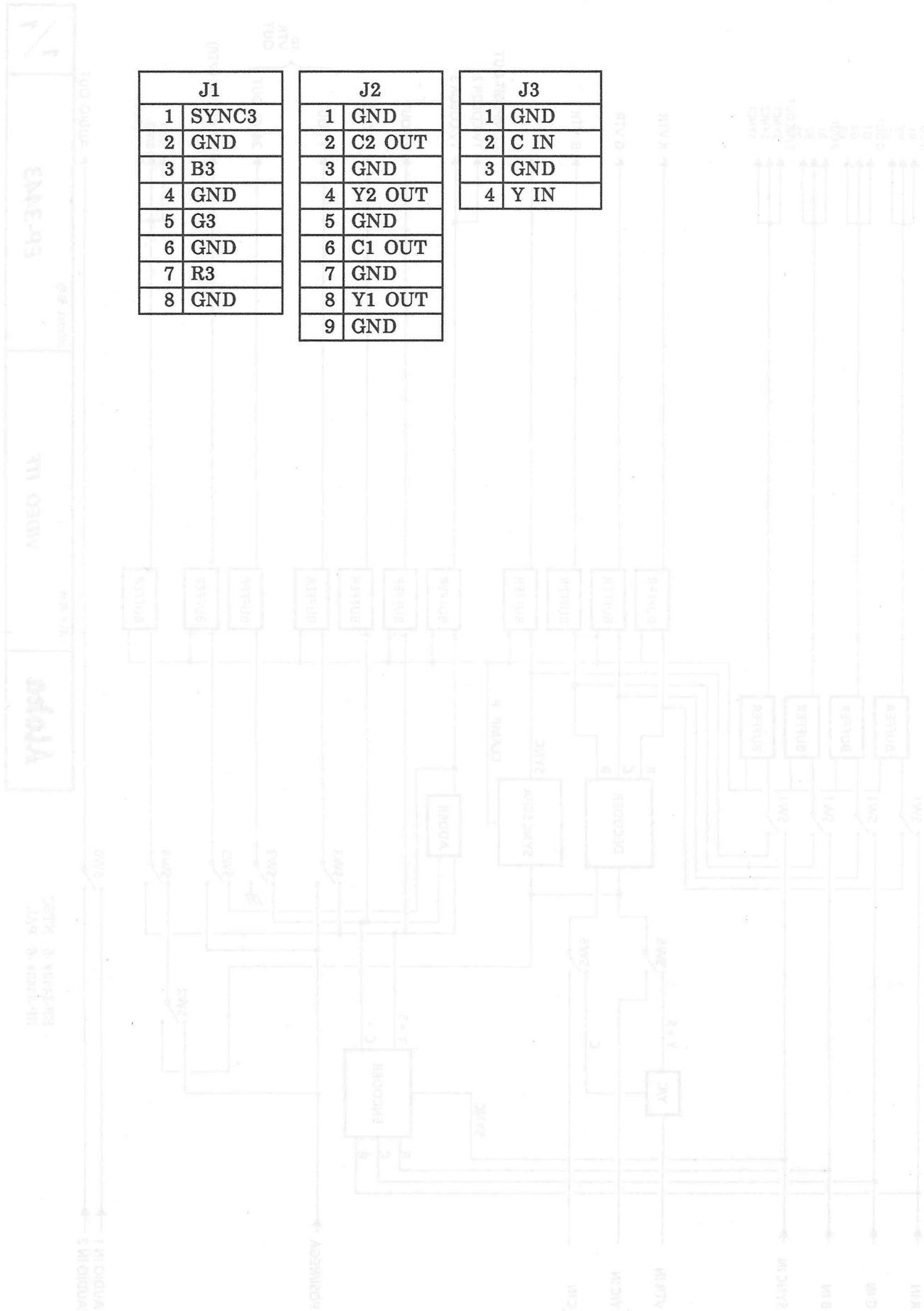

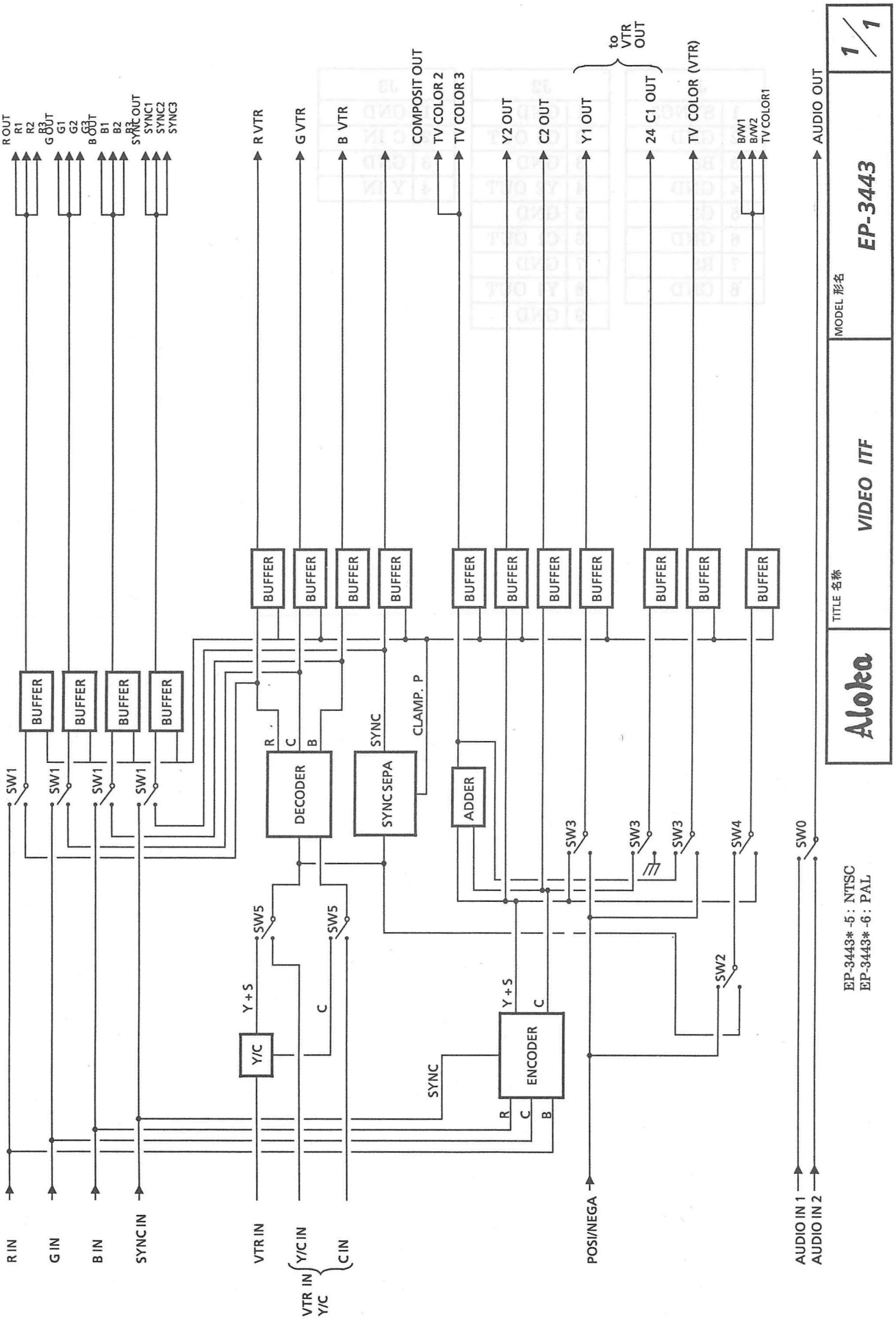
R IN
G IN
B IN
SYNC IN
VTR IN
VTR IN Y/C
Y/C IN
C IN
POSI/NEGA
AUDIO IN 1
AUDIO IN 2
BUFFER
SW1
SW0
SW2
SW3
SW4
SW5
DECODER
SYNC SEPA
CLAMP. P
ADDER
ENCODER
Y/C
Y + S
SYNC
R
C
B
R OUT
R1
R2
R3
G OUT
G1
G2
G3
B OUT
B1
B2
B3
SYNC OUT
SYNC1
SYNC2
SYNC3
R VTR
G VTR
B VTR
COMPOSIT OUT
TV COLOR 2
TV COLOR 3
Y2 OUT
C2 OUT
Y1 OUT
to VTR OUT
24 C1 OUT
TV COLOR (VTR)
B/W1
B/W2
TV COLOR1
AUDIO OUT
EP-3443* -5 : NTSC
EP-3443* -6 : PAL
Aloka
TITLE 名称
VIDEO ITF
MODEL 形名
EP-3443
1/1

## 6-29 EP-3260 DOP TXRX

In this equipment, transmission and receiving are possible in both the PW and CW operation modes. In the case of CW operation mode, one of two probes is used for transmission only and the other for receiving only. In the PW operation mode, each probe is used for both transmission and receiving at the same time.

The received echo signal is subjected to a band limitation while it passes through a band pass filter. Since four kinds of filters are mounted, frequency usable for doppler measurement depends on what filter is selected. Selection of one of four filters is made by serial control data "FSLE."

After passing through a filter, the signal is divided by orthogonal transform detection into two lines. In the case of PW operation mode, a range gate is applied to a signal of the aimed part and the signal in the gate is held by integration. Here, the serial control data "MATCH GAIN" determines integration time constant. In the case of CW operation mode, no range gate is used and no integration is made. Here, the above-mentioned "MATCH GAIN" determines only the gain.

SIGNAL LIST

*J100*

| pin | A | B | pin | A | B |
|---|---|---|---|---|---|
| 1 | +5Va | | 26 | | |
| 2 | +5Va | | 27 | | |
| 3 | A-GND | | 28 | | |
| 4 | +15V | | 39 | | |
| 5 | -15V | | 30 | | VTX IN |
| 6 | D-GND a | | 31 | | |
| 7 | | | 32 | | |
| 8 | | | 33 | | |
| 9 | | | 34 | | |
| 10 | | | 35 | STROBE | SCLK |
| 11 | HPA-G | HPA | 36 | SD2 | SD1 |
| 12 | HPB-G | HPB | 37 | | |
| 13 | | | 38 | | |
| 14 | | | 39 | | |
| 15 | | | 40 | | |
| 16 | CW/ | | 41 | | |
| 17 | DSAMPLE/ | XMIT | 42 | | |
| 18 | MATCH/ | RST | 43 | | |
| 19 | | TESTTYPE | 44 | | |
| 20 | CWRELAY | | 45 | C8-G | C8 |
| 21 | | | 46 | | |
| 22 | | | 47 | | |
| 23 | | | 48 | | |
| 24 | | | 49 | D-GNDa | |
| 25 | D-GNDa | | 50 | D-GNDa | |

*J1 , J2 , J3*

| | |
|---|---|
| J1 | X-COS |
| J2 | SIN/ |
| J3 | COS |

*J601*

| pin | |
|---|---|
| 1 | RX + |
| 2 | GND |
| 3 | RX- |

*J602*

| pin | |
|---|---|
| 1 | TX + |
| 2 | GND |
| 3 | TX- |
| 4 | N.C. |

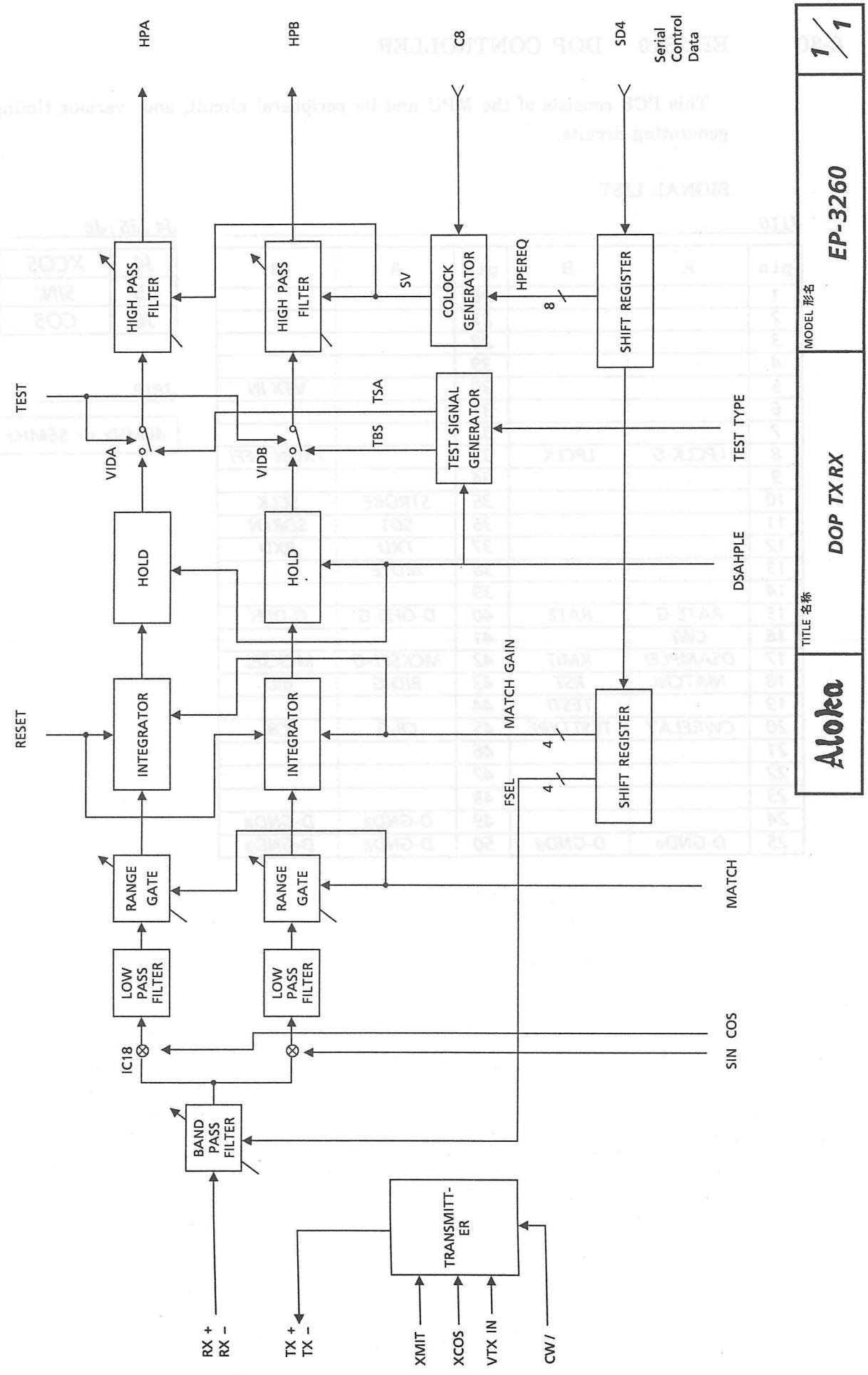
HPA
HPB
C8
SD4
Serial Control Data
HIGH PASS FILTER
HIGH PASS FILTER
COLOCK GENERATOR
SHIFT REGISTER
SV
HPEREQ
8
TEST
VIDA
VIDB
TSA
TBS
TEST SIGNAL GENERATOR
TEST TYPE
HOLD
HOLD
DSAHPLE
RESET
INTEGRATOR
INTEGRATOR
MATCH GAIN
4
4
FSEL
SHIFT REGISTER
RANGE GATE
RANGE GATE
MATCH
LOW PASS FILTER
LOW PASS FILTER
IC18
SIN COS
BAND PASS FILTER
TRANSMITT-ER
RX + RX –
TX + TX –
XMIT
XCOS
VTX IN
CW/
Aloka
TITLE 名称
DOP TX RX
MODEL 形名
EP-3260
1/1

## 6-30 EP-2810 DOP CONTROLLER

This PCB consists of the MPU and its peripheral circuit, and various timing generating circuits.

SIGNAL LIST

*J110*

| pin | A | B | pin | A | B |
|---|---|---|---|---|---|
| 1 | | | 26 | | |
| 2 | | | 27 | | |
| 3 | | | 28 | | |
| 4 | | | 39 | | |
| 5 | | | 30 | | VTX IN |
| 6 | | | 31 | | |
| 7 | | | 32 | | |
| 8 | LPCLK-G | LPCLK | 33 | | TXON-OFF/ |
| 9 | | | 34 | | |
| 10 | | | 35 | STROBE | SCLK |
| 11 | | | 36 | SD1 | SDRTN |
| 12 | | | 37 | TXD | RXD |
| 13 | | | 38 | MUTE | |
| 14 | | | 39 | | |
| 15 | RATE-G | RATE | 40 | D-OFF/-G | D-OFF/ |
| 16 | CW/ | | 41 | | |
| 17 | DSAMPLE/ | XMIT | 42 | MCKSEL-G | MCKSEL |
| 18 | MATCH/ | RST | 43 | B/D-G | B/D |
| 19 | | TEST/ | 44 | | |
| 20 | CWRELAY | TESTTYPE | 45 | C8-G | C8 |
| 21 | | | 46 | | |
| 22 | | | 47 | | |
| 23 | | | 48 | | |
| 24 | | | 49 | D-GNDa | D-GNDa |
| 25 | D-GNDa | D-GNDa | 50 | D-GNDa | D-GNDa |

*J4 , J5 , J6*

| | |
|---|---|
| J4 | XCOS |
| J5 | SIN/ |
| J6 | COS |

*J612*

40MHz or 56MHz

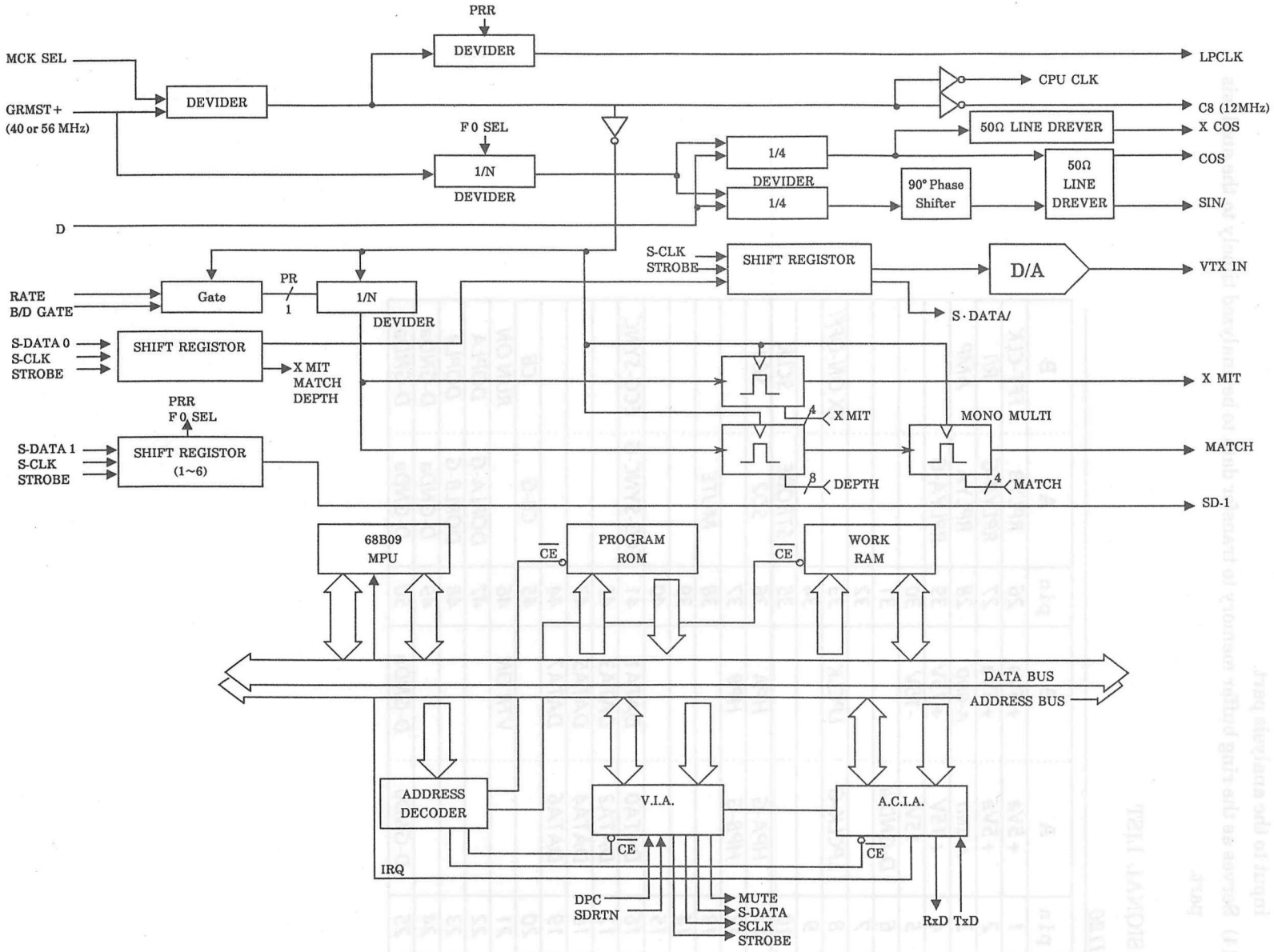


| Aloka | TITLE 名称 DOP CONTROLLER | MODEL 形名 EP-2810 | 1/1 |
|---|---|---|---|

## 6-31 EP-3259 DOP FILTER

This PCB has the following four functions :

(1) Serves as the Low Pass Filter circuit to increase the S/N ratio of doppler signals.
(2) Serves as the AA Filter (Anti-Allasing Filter) circuit.
(3) Serves as the AGC (Automatic Gain Control) circuit to expand the dynamic range of input to the analysis part.
(4) Serves as the ring buffer memory to transfer data to be analyzed timely to the analysis part.

SIGNAL LIST

*J120*

| pin | A | B | pin | A | B |
|---|---|---|---|---|---|
| 1 | +5Va | +5Va | 26 | RPLYB | FFT-CLK |
| 2 | +5Va | +5Va | 27 | RPLYB-G | R/I |
| 3 | A-GND | A-GND | 28 | RPLYA | AMP |
| 4 | +15V | +15V | 39 | RPLYA-G | |
| 5 | -15V | -15V | 30 | | |
| 6 | D-GND a | | 31 | | |
| 7 | | | 32 | | |
| 8 | LPCLK-G | LPCLK | 33 | | TX ON-OFF/ |
| 9 | | | 34 | | |
| 10 | | | 35 | STROBE | SCLK |
| 11 | HPA-G | HPA | 36 | SD2 | SD1 |
| 12 | HPB-G | HPB | 37 | | |
| 13 | | | 38 | MUTE | |
| 14 | | | 39 | | |
| 15 | | | 40 | | |
| 16 | DATA0 | DATA1 | 41 | ECG-SYNC-G | ECG-SYNC |
| 17 | DATA2 | DATA3 | 42 | | |
| 18 | DATA4 | DATA5 | 43 | | |
| 19 | DATA6 | DATA7 | 44 | | |
| 20 | | | 45 | C8-G | C8 |
| 21 | | VTR ON | 46 | | RUN ON |
| 22 | | | 47 | DOPLA-G | DOPLA |
| 23 | | | 48 | DOPLB-G | DOPLB |
| 24 | | | 49 | D-GNDa | D-GNDa |
| 25 | D-GNDa | D-GNDa | 50 | D-GNDa | D-GNDa |

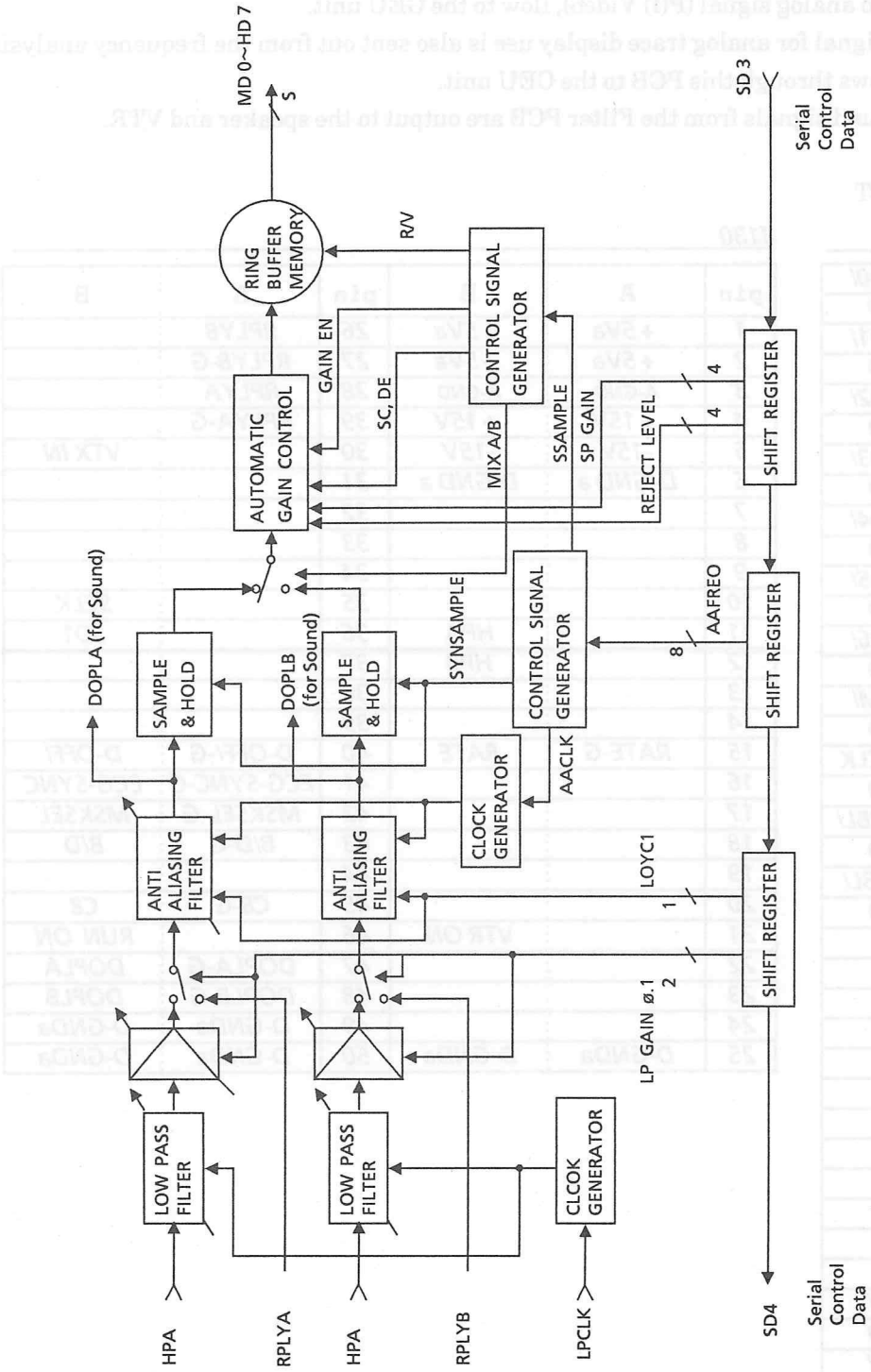


| Aloka | TITLE 名称 DOP FILTER | MODEL 形名 EP-3259 | 1/1 |
|---|---|---|---|

## 6-32 EP-2812 DOP INTERFACE

128-point spectrum data (SPVID 0/~6/) from the frequency analysis part pass through the smoothing circuit in the vertical direction (frequency-axis direction) and, after converted into analog signal (P(f) Video), flow to the GEU unit.

The PPM signal for analog trace display use is also sent out from the frequency analysis part and it flows through this PCB to the CEU unit.

Doppler sound signals from the Filter PCB are output to the speaker and VTR.

SIGNAL LIST

*J7*

| | |
|---|---|
| 1 | SPVID0/ |
| 2 | GND |
| 3 | SPVID1/ |
| 4 | GND |
| 5 | SPVID2/ |
| 6 | GND |
| 7 | SPVID3/ |
| 8 | GND |
| 9 | SPVID4/ |
| 10 | GND |
| 11 | SPVID5/ |
| 12 | GND |
| 13 | SPVID6/ |
| 14 | GND |
| 15 | TRPPM/ |
| 16 | GND |
| 17 | DATACLK |
| 18 | GND |
| 19 | SPC UNBL/ |
| 20 | GND |
| 21 | TR UNBL/ |
| 22 | GND |
| 23 | |
| 24 | |
| 25 | |
| 26 | |
| 27 | |
| 28 | |
| 29 | |
| 30 | |
| 31 | |
| 32 | |
| 33 | |
| 34 | |
| 35 | RXD/ |
| 36 | GND |
| 37 | TXD/ |
| 38 | GND |
| 39 | INTRES/ |
| 40 | GND |

*J130*

| pin | A | B | pin | A | B |
|---|---|---|---|---|---|
| 1 | +5Va | +5Va | 26 | RPLYB | |
| 2 | +5Va | +5Va | 27 | RPLYB-G | |
| 3 | A-GND | A-GND | 28 | RPLYA | |
| 4 | +15V | +15V | 39 | RPLYA-G | |
| 5 | -15V | -15V | 30 | | VTX IN |
| 6 | D-GND a | D-GND a | 31 | | |
| 7 | | | 32 | | |
| 8 | | | 33 | | |
| 9 | | | 34 | | |
| 10 | | | 35 | | SCLK |
| 11 | | HPA | 36 | | SD1 |
| 12 | | HPB | 37 | | |
| 13 | | | 38 | | |
| 14 | | | 39 | | |
| 15 | RATE-G | RATE | 40 | D-OFF/-G | D-OFF/ |
| 16 | | | 41 | ECG-SYNC-G | ECG-SYNC |
| 17 | | | 42 | MSKSEL-G | MSKSEL |
| 18 | | | 43 | B/D-G | B/D |
| 19 | | | 44 | | |
| 20 | | | 45 | C8-G | C8 |
| 21 | | VTR ON | 46 | | RUN ON |
| 22 | | | 47 | DOPLA-G | DOPLA |
| 23 | | | 48 | DOPLB-G | DOPLB |
| 24 | | | 49 | D-GNDa | D-GNDa |
| 25 | D-GNDa | D-GNDa | 50 | D-GNDa | D-GNDa |

J603

| | |
|---|---|
| 1 | DOPLA |
| 2 | DOPL-G |
| 3 | |
| 4 | GND |
| 5 | |
| 6 | GND |
| 7 | |
| 8 | |
| 9 | RPLYA |
| 10 | RPLY-G |
| 11 | RPLYB |
| 12 | RPLY-G |
| 13 | DOPLB |
| 14 | DOPL-G |
| 15 | |
| 16 | GND |
| 17 | GND |
| 18 | GND |
| 19 | |
| 20 | VOLUME-G |
| 21 | |
| 22 | |
| 23 | |
| 24 | |
| 25 | |
| 26 | |

J604

| | |
|---|---|
| 1 | DSVID1 |
| 2 | DSVID1 |
| 3 | DSVID2 |
| 4 | DSVID2 |
| 5 | DSVID3 |
| 6 | DSVID3 |
| 7 | DSVID4 |
| 8 | DSVID4 |
| 9 | DSVID5 |
| 10 | DSVID5 |
| 11 | DSVID6 |
| 12 | DSVID6 |
| 13 | DSVID7 |
| 14 | DSVID7 |
| 15 | TRVID |
| 16 | TRVID |
| 17 | DOT CLK |
| 18 | DOT CLK |
| 19 | UNBLS |
| 20 | UNBLS |
| 21 | NC |
| 22 | NC |
| 23 | UNBLT |
| 24 | UNBLT |
| 25 | NC |
| 26 | 48MHz/ |
| 27 | 48MHz/-G |
| 28 | INTRES |
| 29 | RATE |
| 30 | RATE |
| 31 | B/D GATE |
| 32 | B/D GATE |
| 33 | D-OFF/ |
| 34 | D-OFF/ |
| 35 | SD1 |
| 36 | SD1 |
| 37 | SDRTN |
| 38 | SDRTN |
| 39 | GND |
| 40 | NC |

J606

| | |
|---|---|
| 1 | SOUND A |
| 2 | SOUND-G |
| 3 | SOUND B |
| 4 | SOUND-G |
| 5 | NC |

J607

| | |
|---|---|
| 1 | VTR A |
| 2 | VTR-G |
| 3 | |
| 4 | VTR B |
| 5 | VYR-G |

J609

| | |
|---|---|
| J609 | P(f) VIDEO |

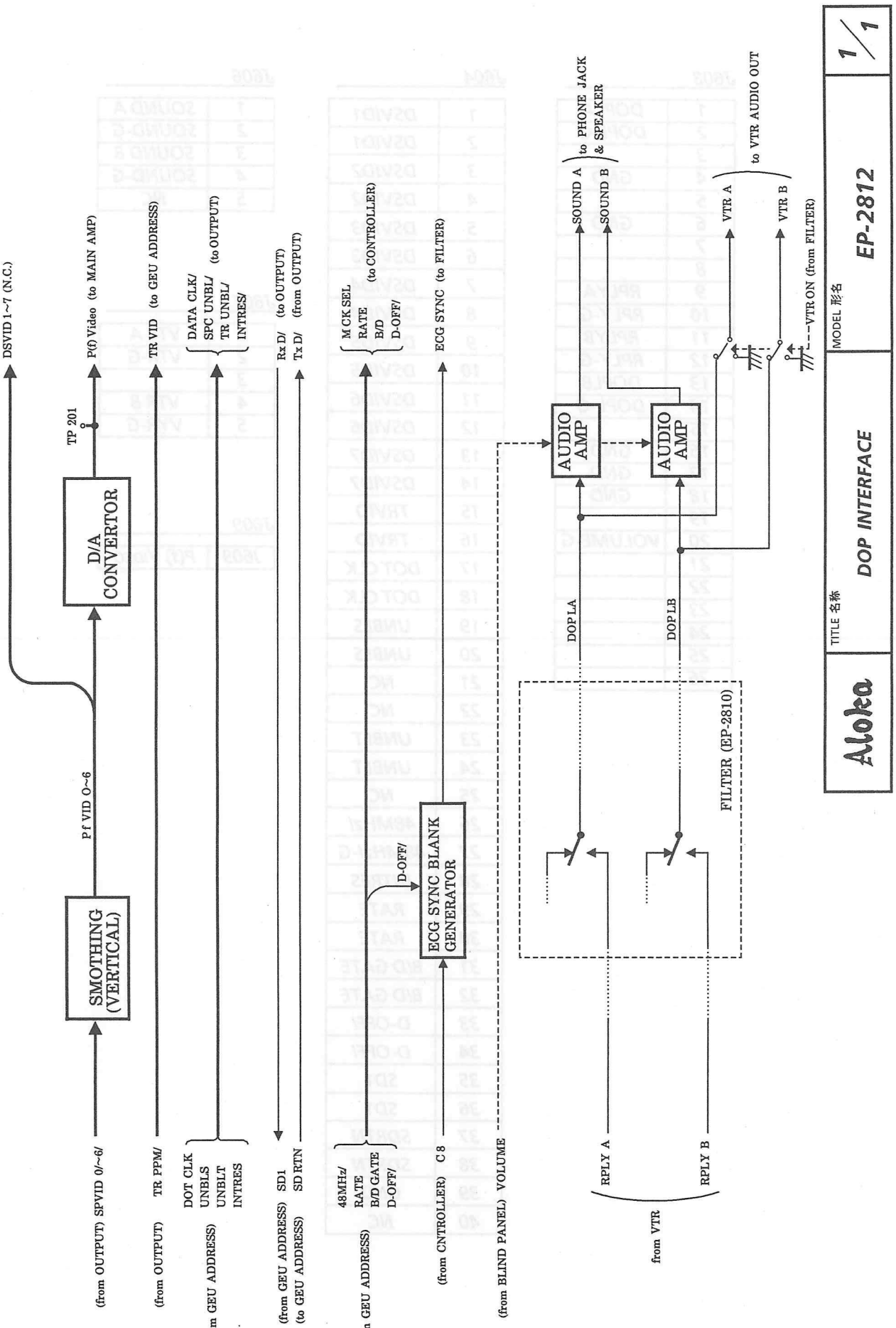
DSVID 1~7 (N.C.)
P(f) Video (to MAIN AMP)
TP 201
D/A CONVERTOR
P f VID 0~6
SMOTHING (VERTICAL)
(from OUTPUT) SPVID 0/~6/
TR VID (to GEU ADDRESS)
(from OUTPUT) TR PPM/
DATA CLK/
SPC UNBL/
TR UNBL/
INTRES/
(to OUTPUT)
(from GEU ADDRESS) DOT CLK UNBLS UNBLT INTRES
Rx D/ (to OUTPUT)
Tx D/ (from OUTPUT)
(from GEU ADDRESS) SD1
(to GEU ADDRESS) SD RTN
M CK SEL
RATE
B/D
D-OFF/
(to CONTROLLER)
(from GEU ADDRESS) 48MHz/ RATE B/D GATE D-OFF/
ECG SYNC (to FILTER)
D-OFF/
ECG SYNC BLANK GENERATOR
(from CNTROLLER) C 8
(from BLIND PANEL) VOLUME
AUDIO AMP
AUDIO AMP
SOUND A
SOUND B
to PHONE JACK & SPEAKER
VTR A
VTR B
to VTR AUDIO OUT
VTR ON (from FILTER)
DOP LA
DOP LB
FILTER (EP-2810)
RPLY A
RPLY B
from VTR
Aloka
TITLE 名称
DOP INTERFACE
MODEL 形名
EP-2812
1/1

## 6-33 FFT PCB

The frequency analyzer (NJK-196A) consists of the FFT PCB and OUTPUT PCB.

To increase the speed of processing, the frequency analyzer uses four DSPs (Digital signal Processors) for FFT operation (by two DSPs), power operation, and trace operation, respectively. Overall processing time is about 5 ms and the result is updated every about 2.3 ms by pipeline control. Furthermore, interpolation control can be made to increase apparent speed.

This FFT PCB performs FFT operation and power operation.

SIGNAL LIST

*J140*

| pin | A | B | pin | A | B |
|---|---|---|---|---|---|
| 1 | +5Va | | 26 | | FFT-CLK |
| 2 | +5Va | | 27 | | R/I |
| 3 | | | 28 | | AMP |
| 4 | | | 39 | | |
| 5 | | | 30 | DTB30 | DTB31 |
| 6 | D-GND a | | 31 | DTB32 | DTB33 |
| 7 | | | 32 | DTB34 | DTB35 |
| 8 | ENV10 | ENV11 | 33 | DTB36 | DTB37 |
| 9 | ENV12 | ENV13 | 34 | | |
| 10 | ENV14 | ENV15 | 35 | STROBE | SCLK |
| 11 | ENV16 | ENV17 | 36 | SD3 | SD4 |
| 12 | AMPOE | | 37 | | |
| 13 | RESET | READCP | 38 | | |
| 14 | SINE | FFT STA/ | 39 | BPOS0 | BPOS1 |
| 15 | | INTPOW | 40 | BPOS2 | BPOS3 |
| 16 | DATA0 | DATA1 | 41 | BPOS4 | BPOS5 |
| 17 | DATA2 | DATA3 | 42 | REJ0 | REJ1 |
| 18 | DATA4 | DATA5 | 43 | REJ2 | REJ3 |
| 19 | DATA6 | DATA7 | 44 | INOUT/ | |
| 20 | XYZ | | 45 | C8-G | C8 |
| 21 | COUNT | INTITE | 46 | | |
| 22 | | WE3/ | 47 | | |
| 23 | MCLK | MCLKE | 48 | | |
| 24 | MCLK/ | MCLKE/ | 49 | D-GNDb | D-GNDb |
| 25 | D-GNDb | D-GNDb | 50 | D-GNDb | D-GNDb |

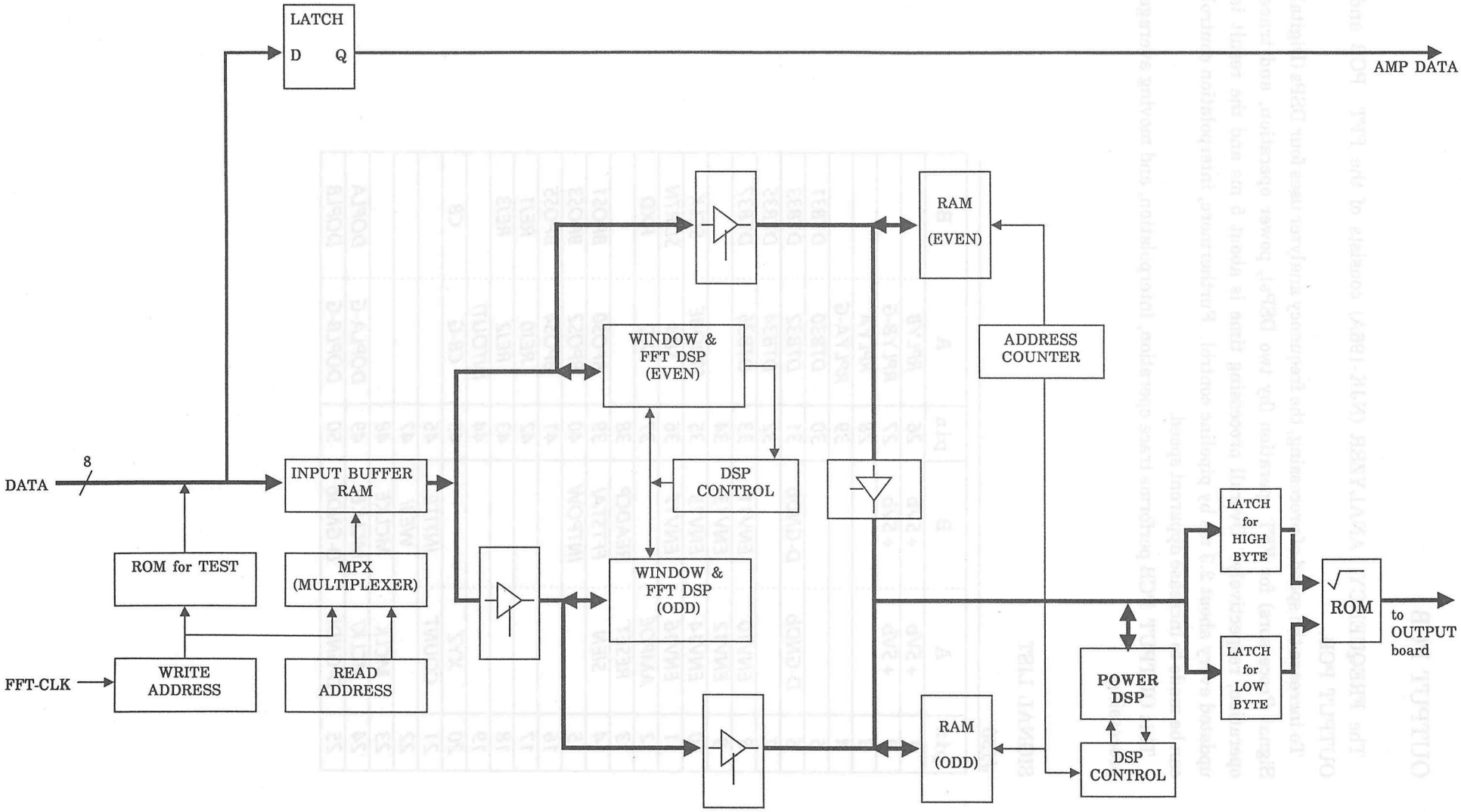


| Aloka | TITLE 名称 FFT Calculator | MODEL 形名 FFT (NJK-196A) | 1/1 |
|---|---|---|---|

## 6-34 OUTPUT PCB

The FREQUENCY ANALYZER (NJK-196A) consists of the FFT PCB and OUTPUT PCB.

To increase the speed of processing, the frequency analyzer uses four DSPs (Digital Signal Processors) for FFT operation (by two DSPs), power operation, and trace operation, respectively. Overall processing time is about 5 ms and the result is updated every about 2.3 ms by pipeline control. Furthermore, interpolation control can be made to increase apparent speed.

This OUTPUT PCB performs trace operation, interpolation, and moving average processing.

SIGNAL LIST

*J150*

| pin | A | B | pin | A | B |
|---|---|---|---|---|---|
| 1 | +5Vb | +5Vb | 26 | RPLYB | |
| 2 | +5Vb | +5Vb | 27 | RPLYB-G | |
| 3 | | | 28 | RPLYA | |
| 4 | | | 39 | RPLYA-G | |
| 5 | | | 30 | DTB30 | DTB31 |
| 6 | D-GNDb | D-GNDb | 31 | DTB32 | DTB33 |
| 7 | | | 32 | DTB34 | DTB35 |
| 8 | ENV10 | ENV11 | 33 | DTB36 | DTB37 |
| 9 | ENV12 | ENV13 | 34 | | |
| 10 | ENV14 | ENV15 | 35 | STROBE | SCLK |
| 11 | ENV16 | ENV17 | 36 | SD4 | SDRTN |
| 12 | AMPOE | | 37 | TXD | RXD |
| 13 | RESET | READCP | 38 | | |
| 14 | SIEN | FFTSTA/ | 39 | BPOS0 | BPOS1 |
| 15 | | INTPOW | 40 | BPOS2 | BPOS3 |
| 16 | | | 41 | BPOS4 | BPOS5 |
| 17 | | | 42 | REJ0 | REJ1 |
| 18 | | | 43 | REJ2 | REJ3 |
| 19 | | | 44 | INTOUT/ | |
| 20 | XYZ | | 45 | C8-G | C8 |
| 21 | COUNT | INTITE | 46 | | |
| 22 | | WE3/ | 47 | | |
| 23 | MCLK | MCLKE | 48 | | |
| 24 | MCLK/ | MCLKE/ | 49 | DOPLA-G | DOPLA |
| 25 | D-GNDb | D-GNDb | 50 | DOPLB-G | DOPLB |

*J8*

| pin | A | pin | A |
|---|---|---|---|
| 1 | SPVID0 | 21 | TRUNBL |
| 2 | GND | 22 | GND |
| 3 | SPVID1 | 23 | |
| 4 | GND | 24 | |
| 5 | SPVID2 | 25 | DSOUNDA |
| 6 | GND | 26 | DSOUNDA-G |
| 7 | SPVID3 | 27 | DSOUNDB |
| 8 | GND | 28 | DSOUNDB-G |
| 9 | SPVID4 | 29 | RPLYA |
| 10 | GND | 30 | RPLYA-G |
| 11 | SPVID5 | 31 | RPLYB |
| 12 | GNDGND | 32 | RPLYB-G |
| 13 | SPVID6 | 33 | |
| 14 | GND | 34 | |
| 15 | TRPPM | 35 | RXD |
| 16 | GND | 36 | GND |
| 17 | DATACLK | 37 | TXD |
| 18 | GND | 38 | GND |
| 19 | SPCUNBL | 39 | INTRES |
| 20 | GND | 40 | GND |

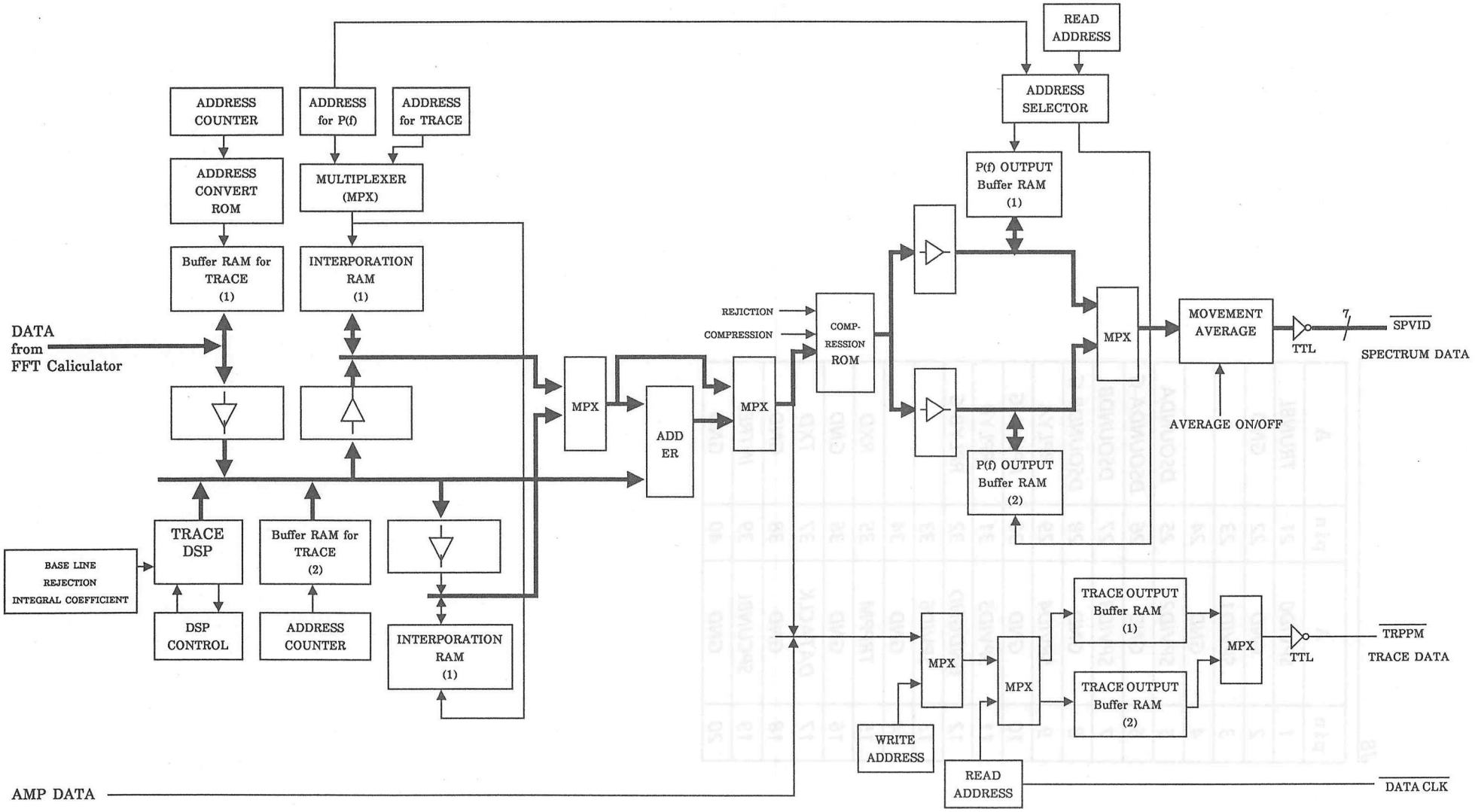


| Aloka | TITLE 名称 TRACE Calculator & Output Buffer | MODEL 形名 OUTPUT (NJK-196A) | 1/1 |
|---|---|---|---|

## 6-35 EP-3117 PHYSIO AMP

This board composed with ECG AMP and R-WAVE DETECTOR.

SIGNAL LIST

| J704 | |
|---|---|
| 1 | +5V |
| 2 | GND |
| 3 | +15V |
| 4 | GND |
| 5 | −15V |
| 6 | GND |

| J705 | |
|---|---|
| 1 | SEL 0 |
| 2 | SEL 1 |
| 3 | N. C. |
| 4 | R-R |
| 5 | N. C. |
| 6 | SYNC SW/ |
| 7 | RDLY + / |
| 8 | RDLY − / |
| 9 | ECG SW/ |
| 10 | RDLY+ LP |
| 11 | RDLY− LP |
| 12 | ECG LP |
| 13 | SYNC LP |
| 14 | N. C. |
| 15 | D. GND |
| 16 | D. GND |

| J706 | |
|---|---|
| 1 | PPM ECG |
| 2 | GND |
| 3 | PPM POSI |
| 4 | GND |

| J800 | |
|---|---|
| 1 | HI |
| 2 | |
| 3 | |
| 4 | GUARD |
| 5 | GUARD |
| 6 | GUARD |
| 7 | GUARD |
| 8 | |
| 9 | |
| 10 | LO |

| J801 | |
|---|---|
| 1 | ECG SIG |
| 2 | GND |
| 3 | ECG SENSI |
| 4 | GND |

| J802 | |
|---|---|
| 1 | +5VA |
| 2 | ECG POSI |
| 3 | GND |
| 4 | D. GND |
| 5 | ECG SW/ |
| 6 | SYNC SW/ |
| 7 | RDLY + / |
| 8 | RDLY − / |
| 9 | ECG LP/ |
| 10 | RDLY+ LP/ |
| 11 | RDLY− LP/ |
| 12 | D. GND |
| 13 | SYNC LP/ |
| 14 | D. GND |
| 15 | +5V |
| 16 | D. GND |

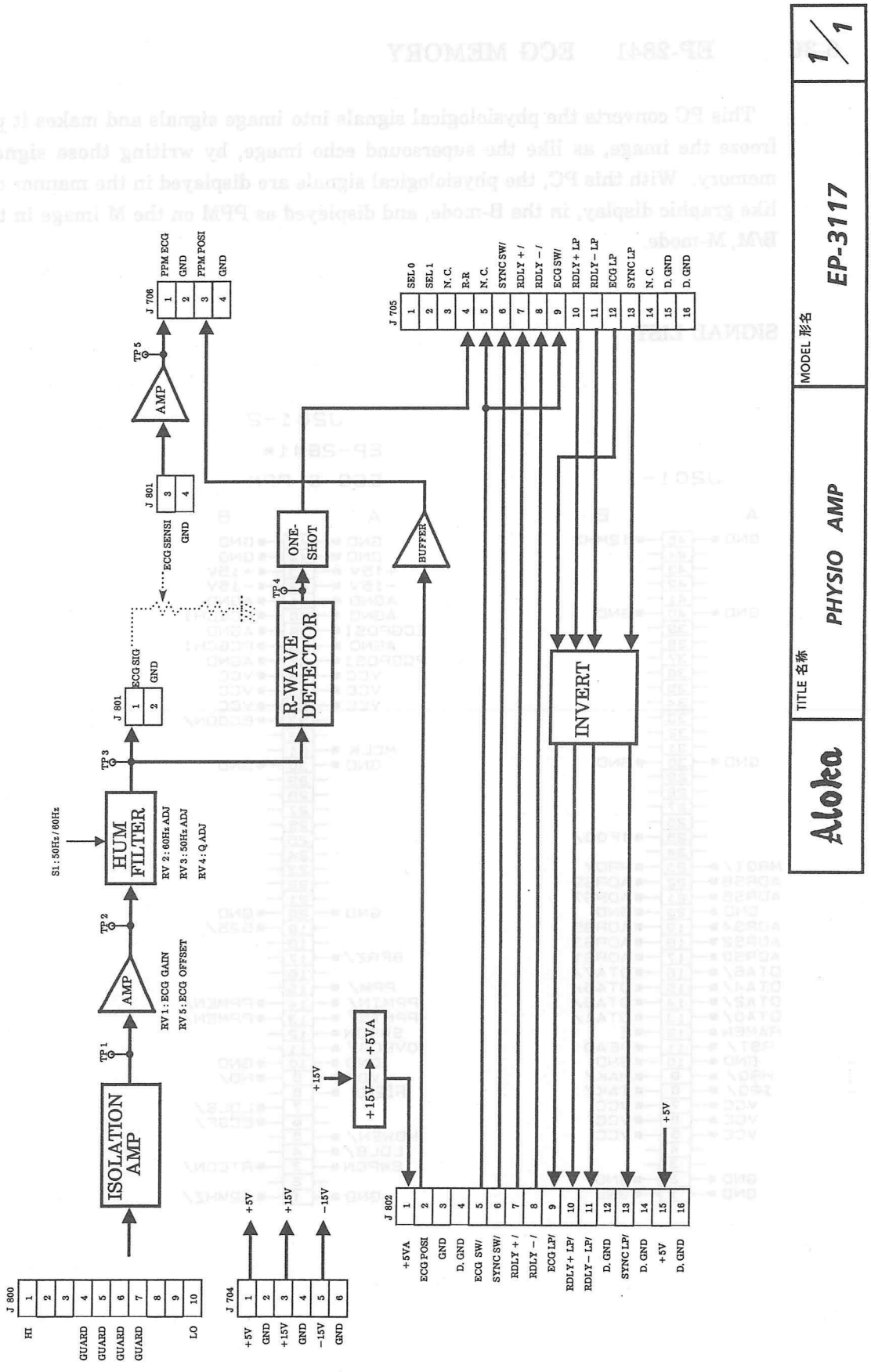
Aloka
TITLE 名称
PHYSIO AMP
MODEL 形名
EP-3117
1/1
J 800
HI
GUARD
GUARD
GUARD
GUARD
LO
J 704
+5V
GND
+15V
GND
−15V
GND
ISOLATION AMP
TP 1
AMP
RV 1 : ECG GAIN
RV 5 : ECG OFFSET
TP 2
HUM FILTER
S1 : 50Hz / 60Hz
RV 2 : 60Hz ADJ
RV 3 : 50Hz ADJ
RV 4 : Q ADJ
TP 3
J 801
ECG SIG
GND
R-WAVE DETECTOR
TP 4
ONE-SHOT
ECG SENSI
GND
J 801
AMP
TP 5
J 706
PPM ECG
GND
PPM POSI
GND
+15V
+15V → +5VA
BUFFER
J 705
SEL 0
SEL 1
N. C.
R-R
N. C.
SYNC SW/
RDLY + /
RDLY − /
ECG SW/
RDLY+ LP
RDLY− LP
ECG LP
SYNC LP
N. C.
D. GND
D. GND
INVERT
+5V
J 802
+5VA
ECG POSI
GND
D. GND
ECG SW/
SYNC SW/
RDLY + /
RDLY − /
ECG LP/
RDLY+ LP/
RDLY− LP/
D. GND
SYNC LP/
D. GND
+5V
D. GND

## 6-36 EP-2841 ECG MEMORY

This PC converts the physiological signals into image signals and makes it possible to freeze the image, as like the supersound echo image, by writing those signals in the memory. With this PC, the physiological signals are displayed in the manner of overlay, like graphic display, in the B-mode, and displayed as PPM on the M image in the case of B/M, M-mode.

SIGNAL LIST

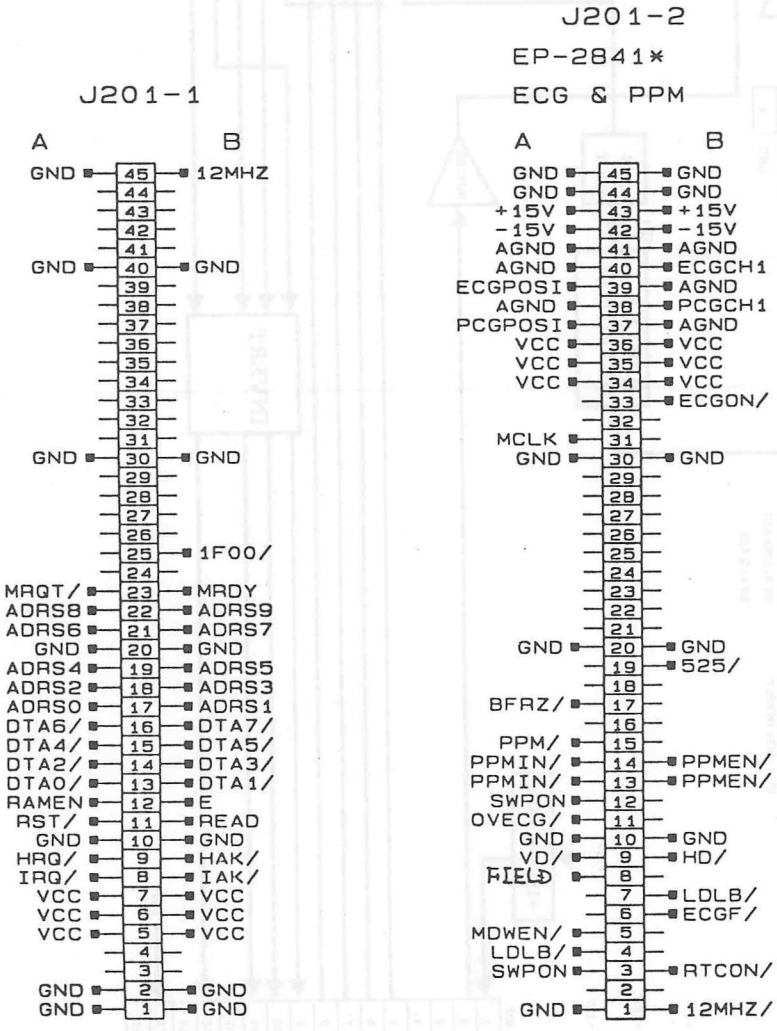

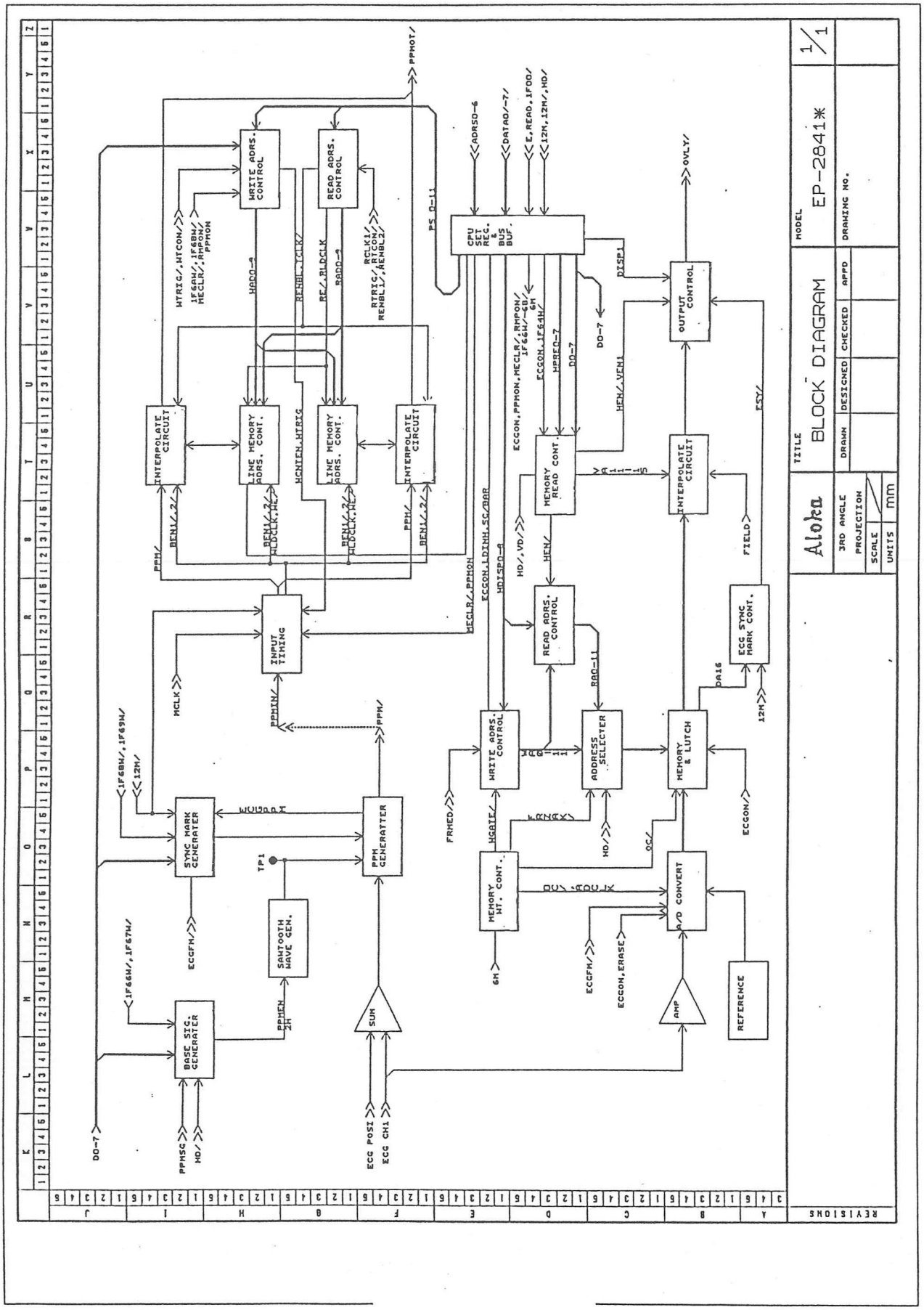
WRITE ADRS. CONTROL
READ ADRS. CONTROL
CPU SET REG. & BUS BUF.
INTERPOLATE CIRCUIT
LINE MEMORY ADRS. CONT.
LINE MEMORY ADRS. CONT.
INTERPOLATE CIRCUIT
INPUT TIMING
OUTPUT CONTROL
MEMORY READ CONT.
INTERPOLATE CIRCUIT
READ ADRS. CONTROL
ECG SYNC MARK CONT.
WRITE ADRS. CONTROL
ADDRESS SELECTER
MEMORY & LUTCH
SYNC MARK GENERATER
PPM GENERATTER
MEMORY WT. CONT.
A/D CONVERT
SAWTOOTH WAVE GEN.
BASE SIG. GENERATER
SUM
AMP
REFERENCE
Aloka
3RD ANGLE PROJECTION
SCALE
UNITS
mm
TITLE
BLOCK DIAGRAM
DRAWN
DESIGNED
CHECKED
APPD
MODEL
EP-2841*
DRAWING NO.
1/1
REVISIONS

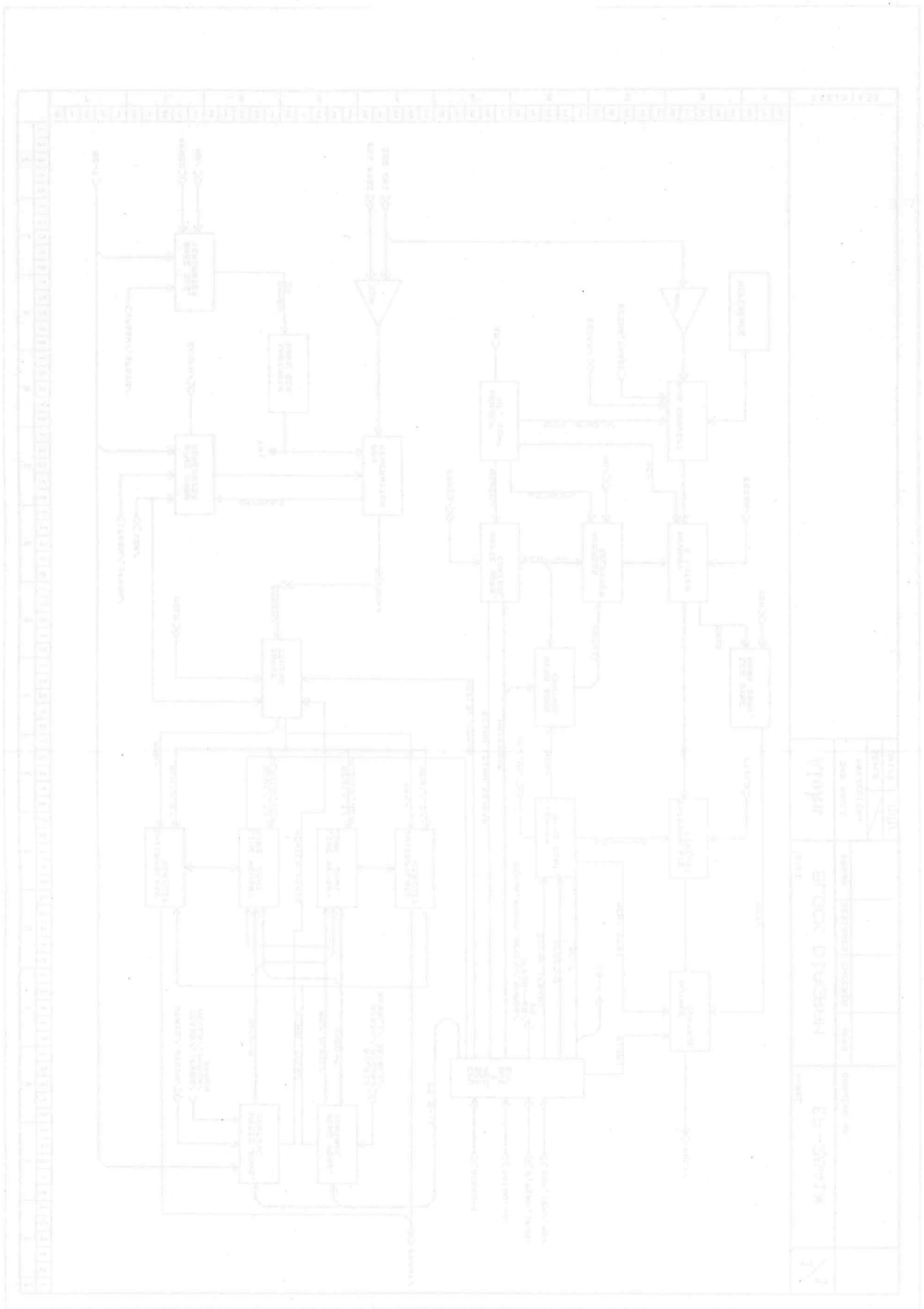

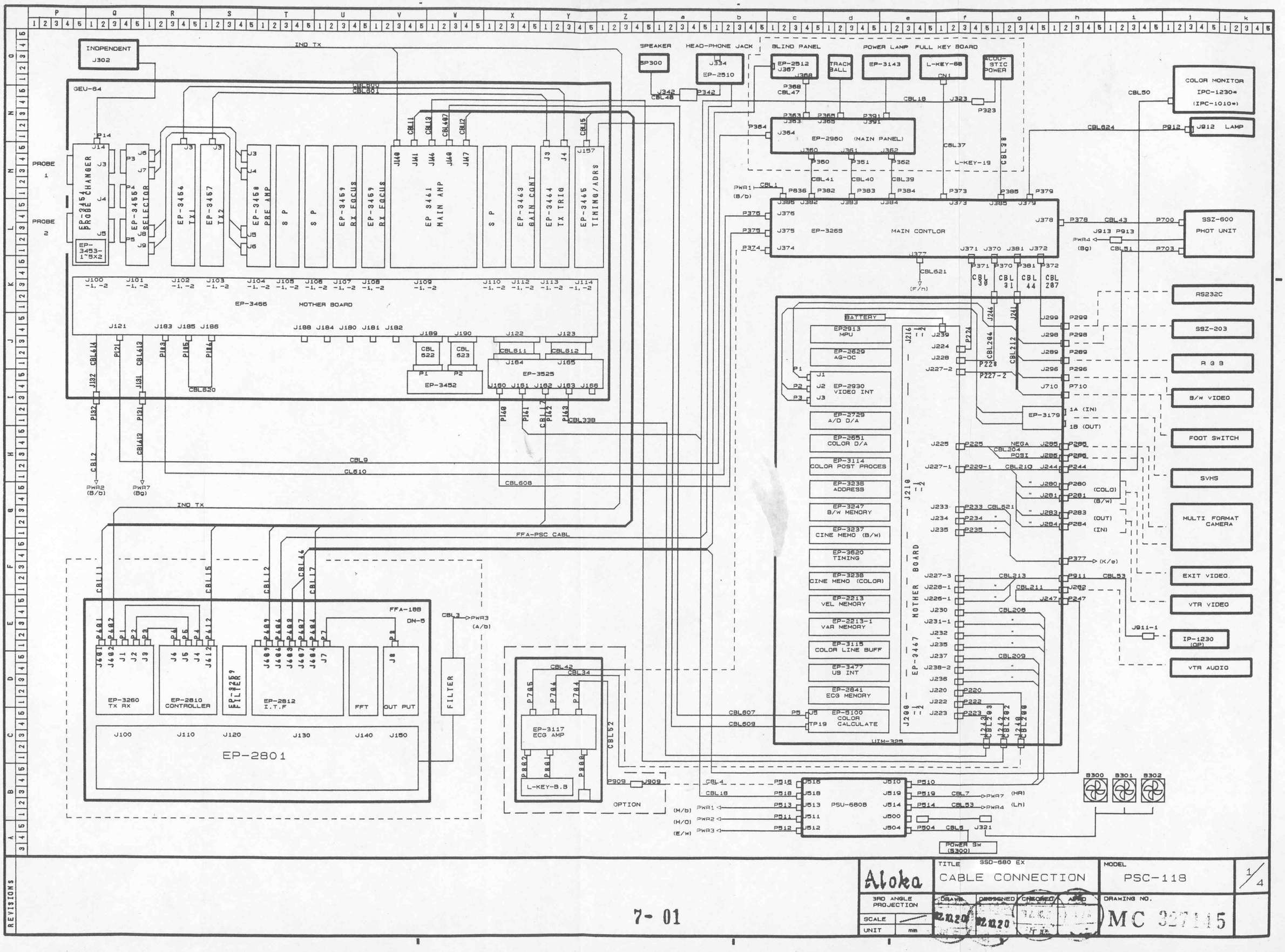


7- 01

| | | | |
|---|---|---|---|
| Aloka | TITLE SSD-680 EX CABLE CONNECTION | MODEL PSC-118 | 1/4 |
| 3RD ANGLE PROJECTION | DRAWN 2.11.20 / DESIGNED 2.11.20 / CHECKED / APPD | DRAWING NO. MC 327115 | |
| SCALE / UNIT mm | | | |

REVISIONS

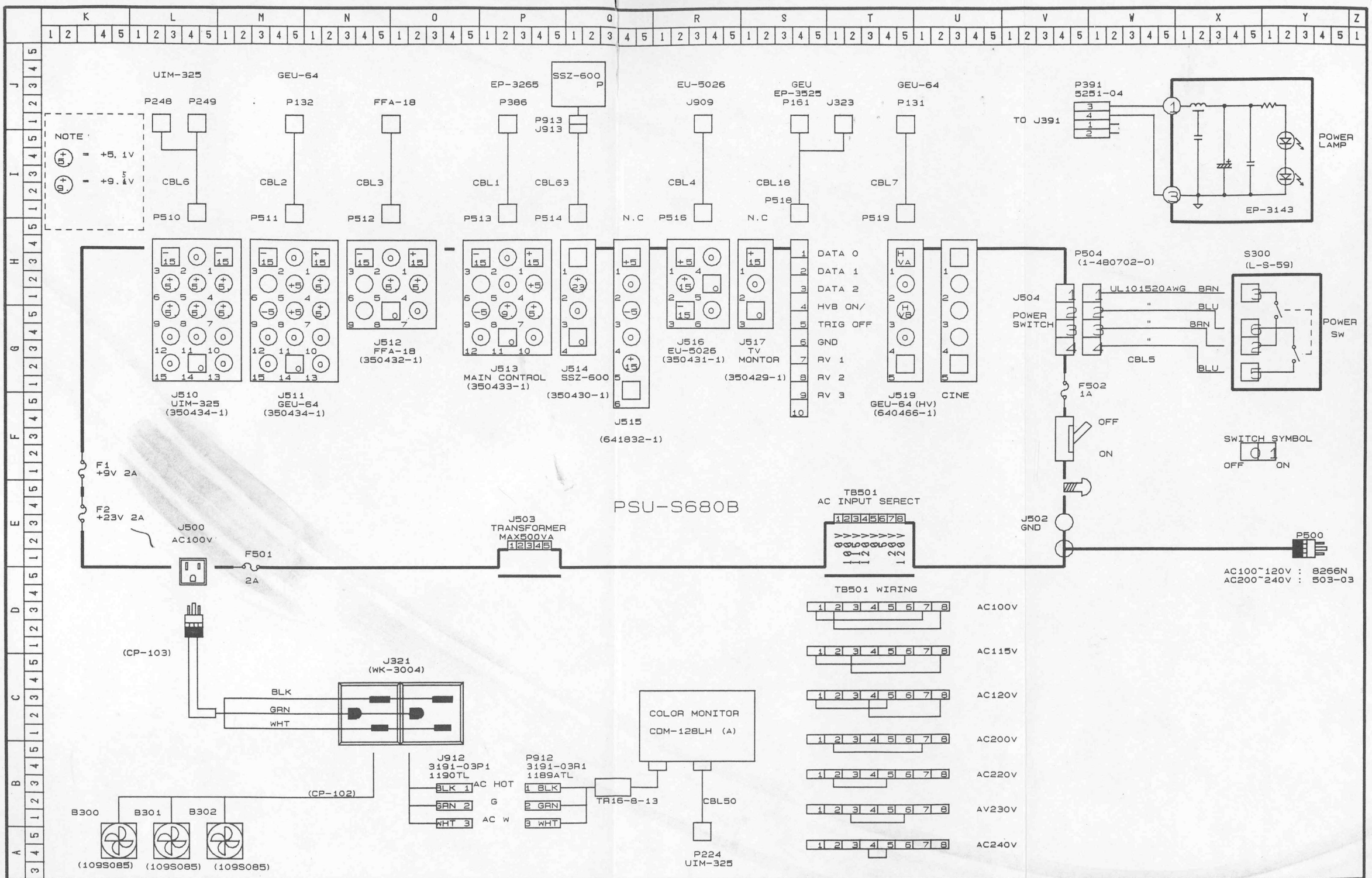


REVISIONS

| | | | | | |
|---|---|---|---|---|---|
| Aloka | TITLE SSD-680EX CABLE CONNECTION | | | MODEL PSC-118 | 2/4 |
| 3RD ANGLE PROJECTION | DRAWN | DESIGNED | CHECKED | APPD | DRAWING NO. |
| SCALE | 上工検 '92.10.20 関泉 | 上工検 '92.10.20 関泉 | 企画G '92.10.21 近藤 | 1技 '92.10.22 入江 | MC 327146 |
| UNITS mm | | | | | |

7- 02

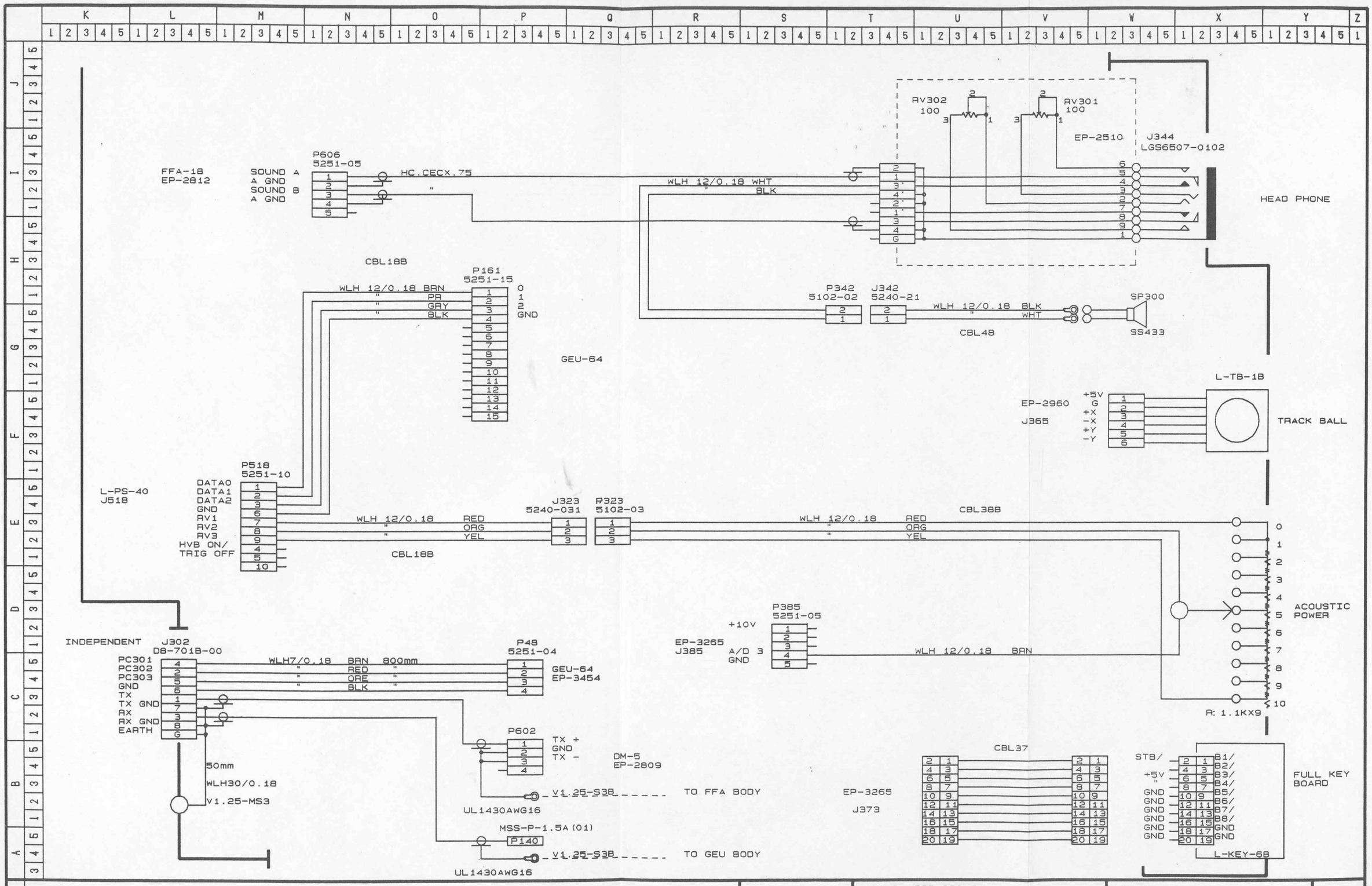


| REVISIONS | Aloka | TITLE SSD-680 EX CABLE CONNECTION | MODEL PSC-118 | 3/4 |
|---|---|---|---|---|
| | 3RD ANGLE PROJECTION | DRAWN 上工検 92.8.20 関泉 | DESIGNED 上工検 92.8.20 関泉 | CHECKED 企画G 92.10.21 近藤 | APPD 上工検 92.10.28 久江 | DRAWING NO. MC 327147 |
| | SCALE / UNITS mm | | | | | |

7-03

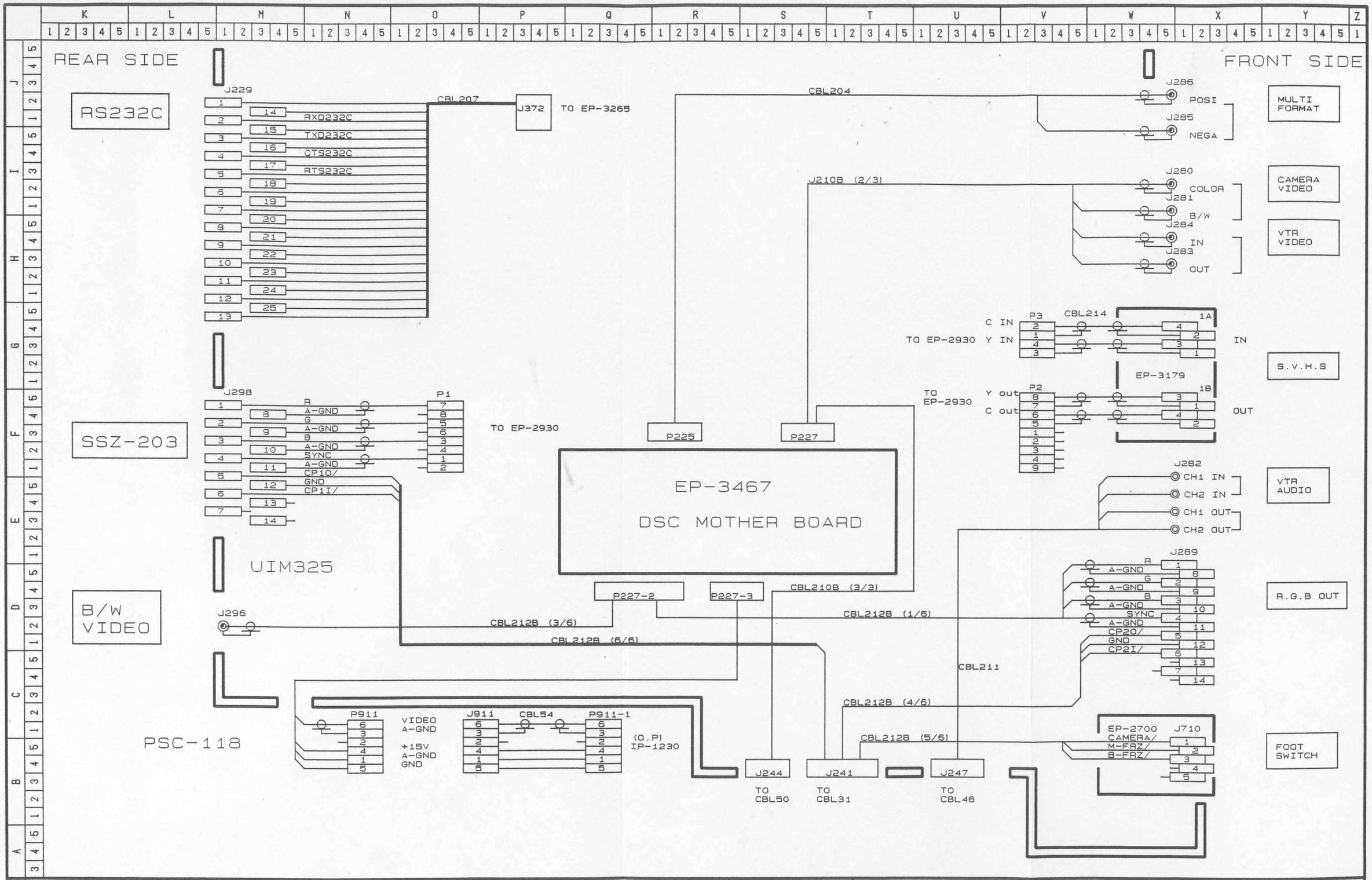


REVISIONS

7- 04

| | | | | | |
|---|---|---|---|---|---|
| Aloka | TITLE SSD-680EX CABLE CONNECTION | | | MODEL PSC-118 | 4/4 |
| 3RD ANGLE PROJECTION | DRAWN | DESIGNED | CHECKED | APPD | DRAWING NO. |
| SCALE | 上工検 92.10.20 関泉 | 上工検 92.10.20 関泉 | 企画G 92.10.21 近藤 | 上検 92.10.22 大工 | MC 327148 |
| UNITS mm | | | | | |

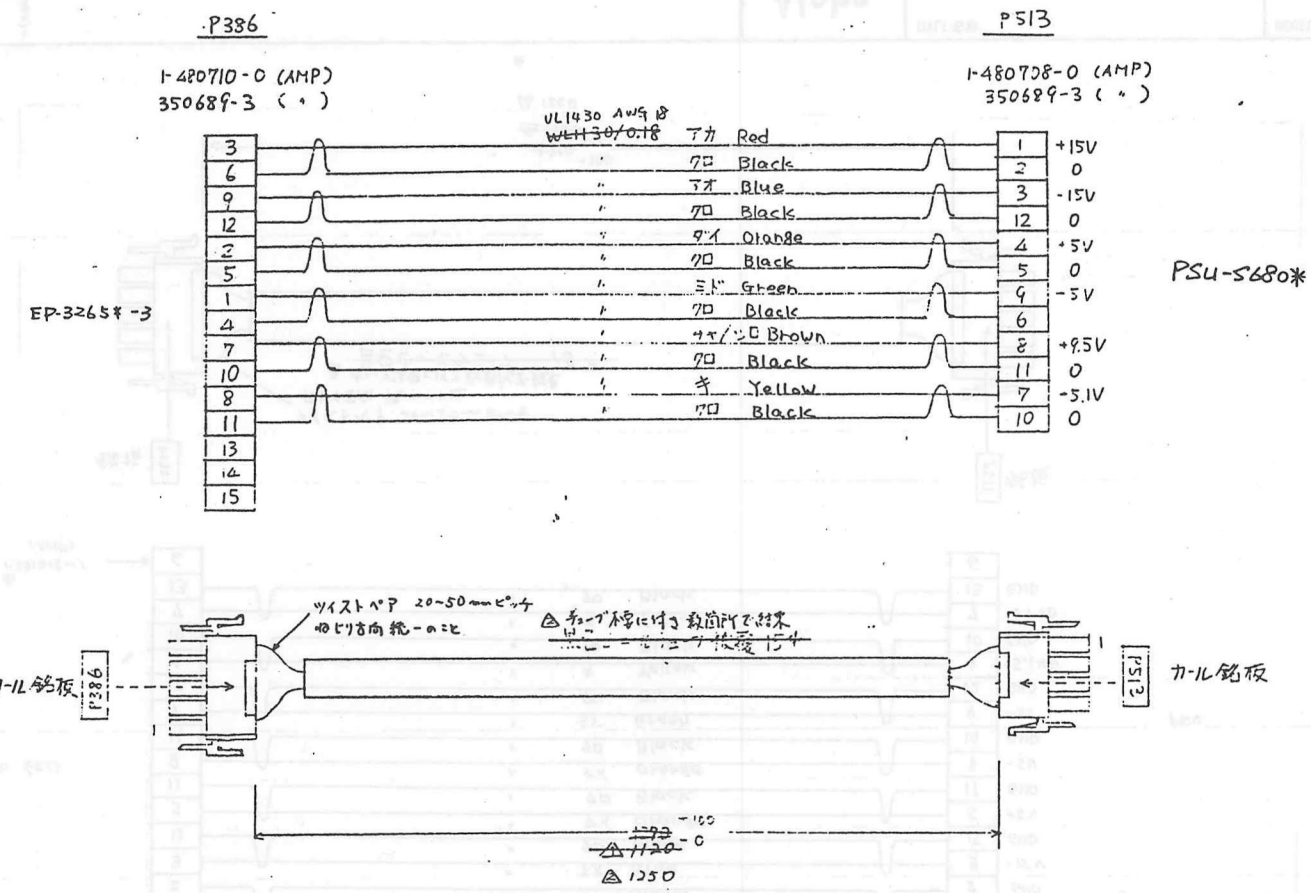


| REVISIONS変更 | | |

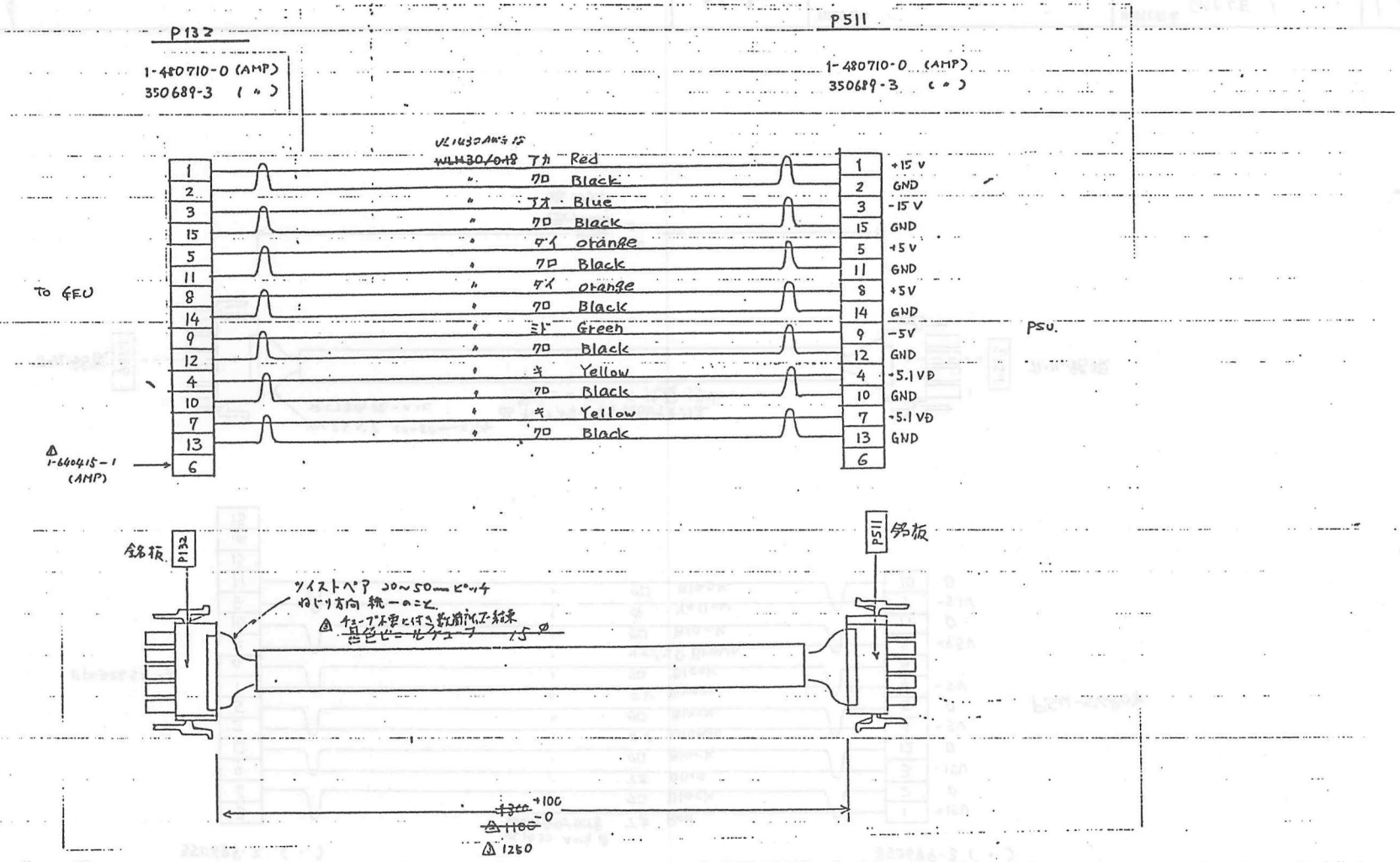


REVISIONS変更

Aloka

3RD ANGLE PROJECTION 第3角法

SCALE 尺度

UNITS 単位 mm

TITLE名称 CABLE 2

| DRAWN製図 | DESIGNED設計 | CHECKED検図 | APPD承認 |
|---|---|---|---|
| 工屋 '88-12-15 | 工屋 '88-12-15 | 宮田 '88-12-19 | |

MODEL形名 CO-L-PS-40-B-13

DRAWING NO.図番 MC314835

1/1

GEU LV PWR

L-013-10-82-A3

90-2

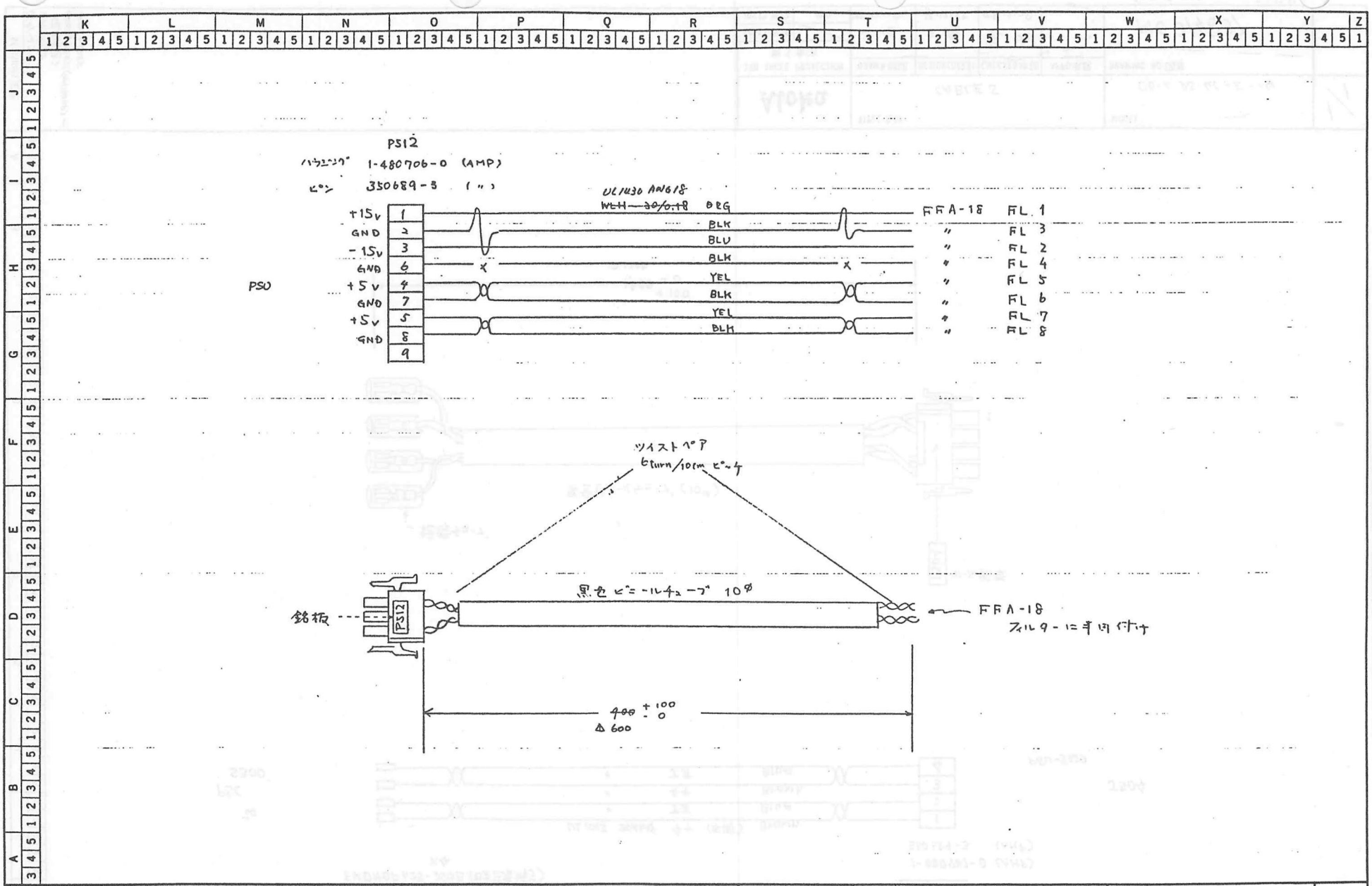


REVISIONS変更

| | | | | | |
|---|---|---|---|---|---|
| Aloka | TITLE名称 CABLE 3 | | | | MODEL形名 CC-L-PS-40-C-09 |
| 3RD ANGLE PROJECTION 第3角法 | DRAWN製図 土屋 '86-12-15 | DESIGNED設計 土屋 '86-12-15 | CHECKED検図 宮城 '86-12-19 | APPD.承認 | DRAWING NO.図番 MC 314836 |
| SCALE 尺度 | | | | | |
| UNITS 単位 mm | | | | | |

1/1

FFA PWR

L-013-10-82-A3

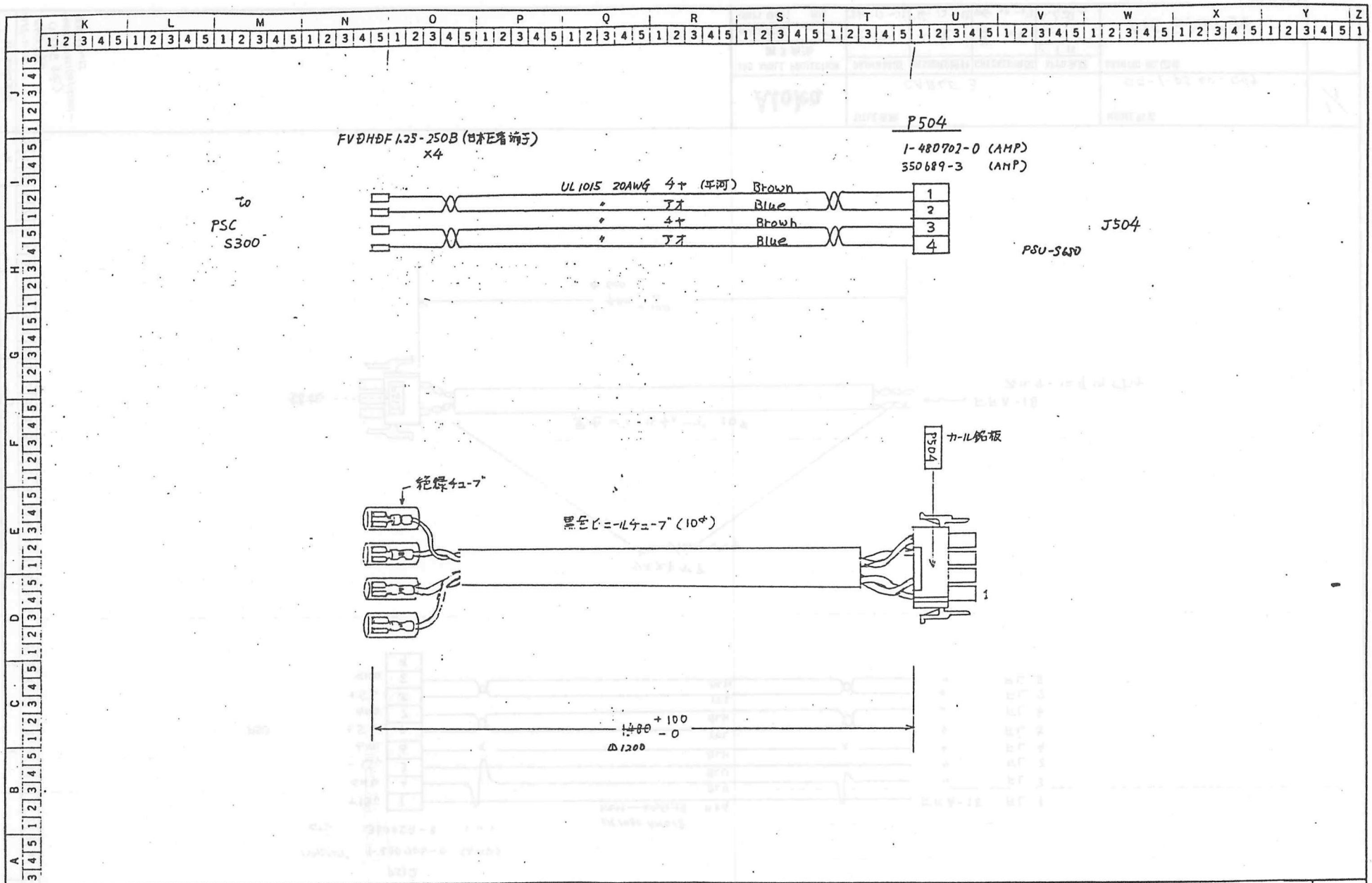


| | | | | | | |
|---|---|---|---|---|---|---|
| Aloka | TITLE 名称 CABLE 5 | | | | MODEL: CO-L-PS-4C-E-14 | 1/1 |
| 3RD ANGLE PROJECTION 第3角法 | DRAWN製図 | DESIGNED設計 | CHECKED検図 | APPD承認 | DRAWING NO. 図番 | |
| SCALE 尺度 / UNITS 単位 mm | 土屋 88-12-15 | 土屋 88-12-15 | 宮水 88.12.29 | | MC 314837 | |

REVISIONS 変更

△ 91-2-14 EMI対応 (基本変更) HW04580ボリ(MH16240)-作成 M0255

7-08

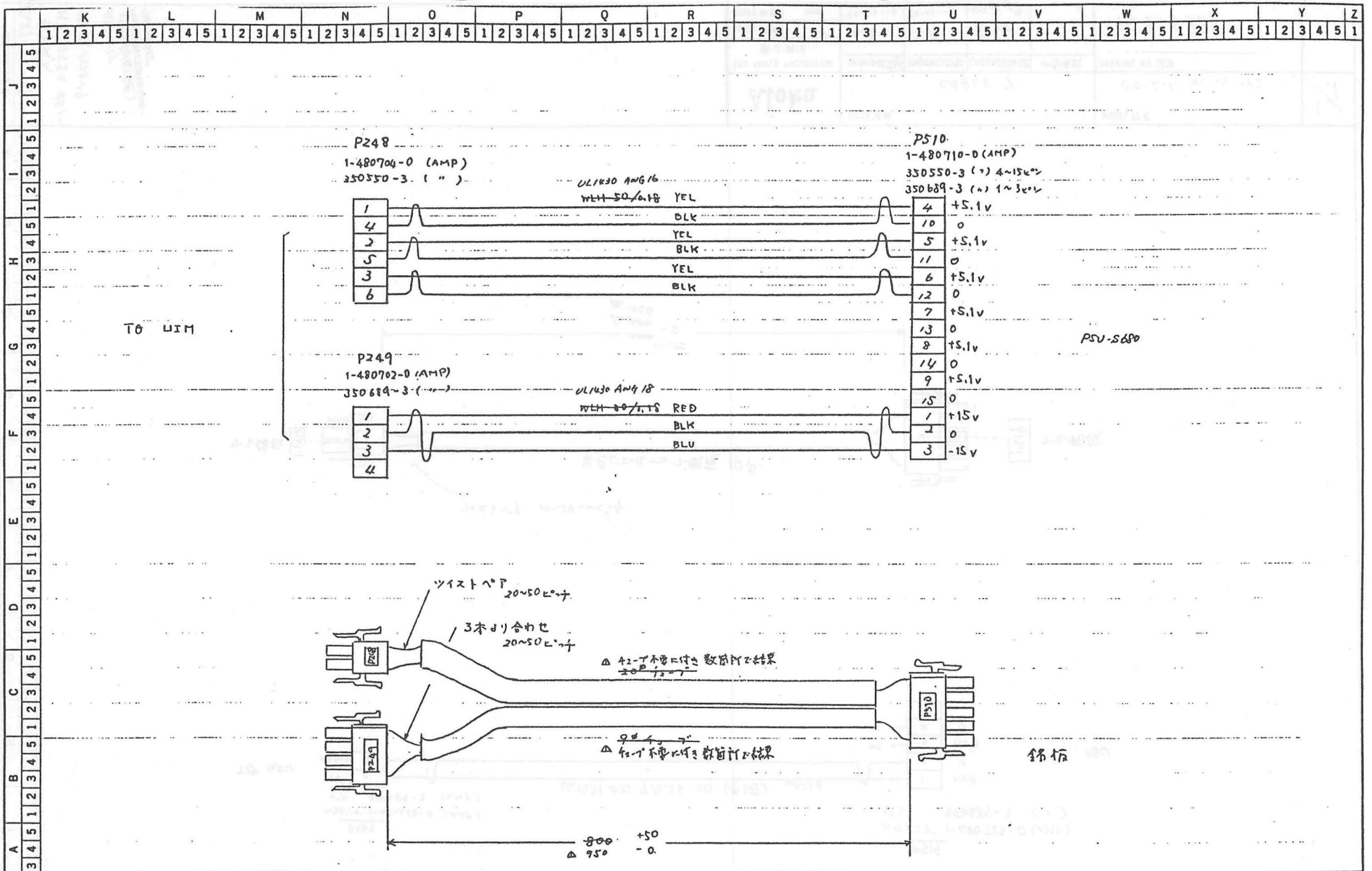


| | | | | | |
|---|---|---|---|---|---|
| Aloka | TITLE 名称: CABLE 6 | | | MODEL 形名: CO-L-PS-40-F-07 | 1/1 |
| 3RD ANGLE PROJECTION 第3角法 | DRAWN 製図 | DESIGNED 設計 | CHECKED 検図 | APPD 承認 | DRAWING NO. 図番 |
| SCALE 尺度 | 土屋 | 土屋 | 宮坂 | | MC 314838 |
| UNITS 単位 mm | '88-12-15 | '88-12-15 | '88-12-29 | | |

REVISIONS 変更
△ 91-2-14 EMI 対応 (ケブル長変更) HW0680 051 (O/M16240) 作番 M0255

UIM PWR

L-013-10-82-A3

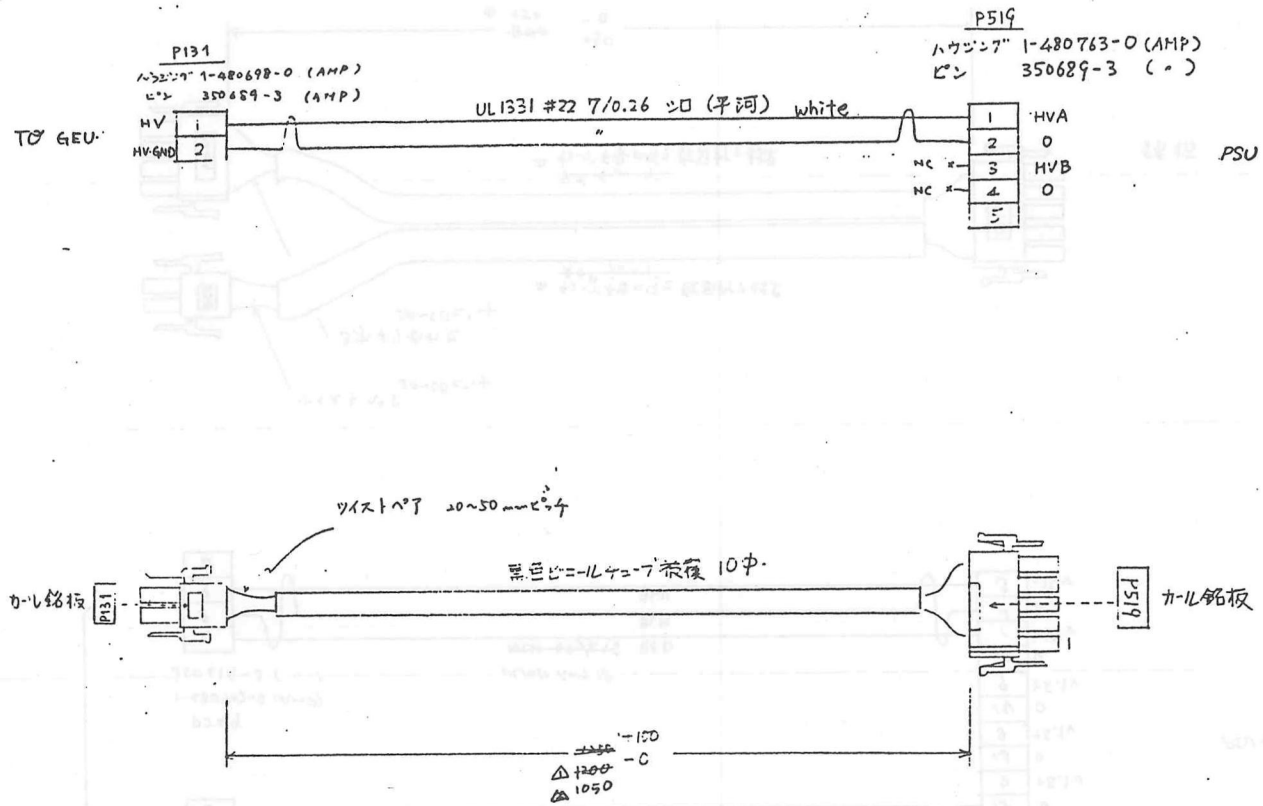


REVISIONS変更
△89-12-29
長又変更
MW95552 #51-
指 1数-M9249
△91-2-14
EMI対応(長さ変更)
MW95580 #51(GM162600)-
手指 M0255

| | | | | | |
|---|---|---|---|---|---|
| Aloka | TITLE名称 CABLE 7 | | | MODEL形名 CO-L-PS 40-G-12 | 1/1 |
| 3RD ANGLE PROJECTION 第3角法 | DRAWN製図 | DESIGNED設計 | CHECKED検図 | APPD承認 | DRAWING NO.図番 |
| SCALE 尺度 | 土屋 | 土屋 | 宮城 | | MC 314839 |
| UNITS 単位 mm | '88-12-15 | '88-12-15 | 88.12.29 | | |

L-013-10-82-A

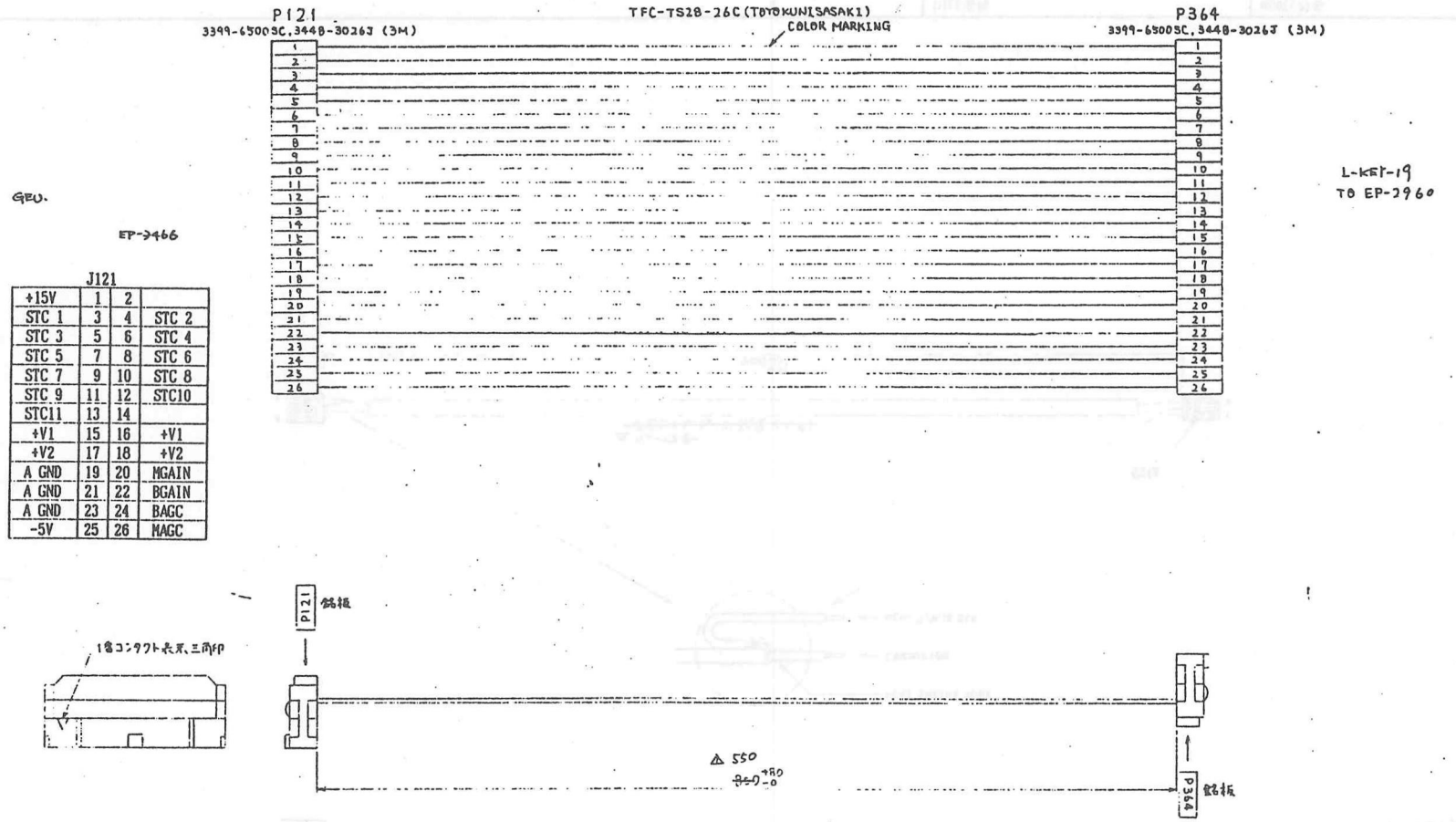


J121

| | | | |
|---|---|---|---|
| +15V | 1 | 2 | |
| STC 1 | 3 | 4 | STC 2 |
| STC 3 | 5 | 6 | STC 4 |
| STC 5 | 7 | 8 | STC 6 |
| STC 7 | 9 | 10 | STC 8 |
| STC 9 | 11 | 12 | STC10 |
| STC11 | 13 | 14 | |
| +V1 | 15 | 16 | +V1 |
| +V2 | 17 | 18 | +V2 |
| A GND | 19 | 20 | MGAIN |
| A GND | 21 | 22 | BGAIN |
| A GND | 23 | 24 | BAGC |
| -5V | 25 | 26 | MAGC |

REVISIONS変更

| | | | | | |
|---|---|---|---|---|---|
| Aloka | TITLE名称 CABLE 9 | | | MODEL形名 CO-GEUSO-W-08 | 1/1 |
| 3RD ANGLE PROJECTION 第3角法 | DRAWN製図 | DESIGNED設計 | CHECKED検図 | APPD承認 | DRAWING NO.図番 MC314840 |
| SCALE尺度 | 工尾 | 工尾 | 宮坂 | | |
| UNITS単位 mm | 88-12-16 | 88-12-16 | 88, 12-29 | - - | |

L-013-10-82-A3

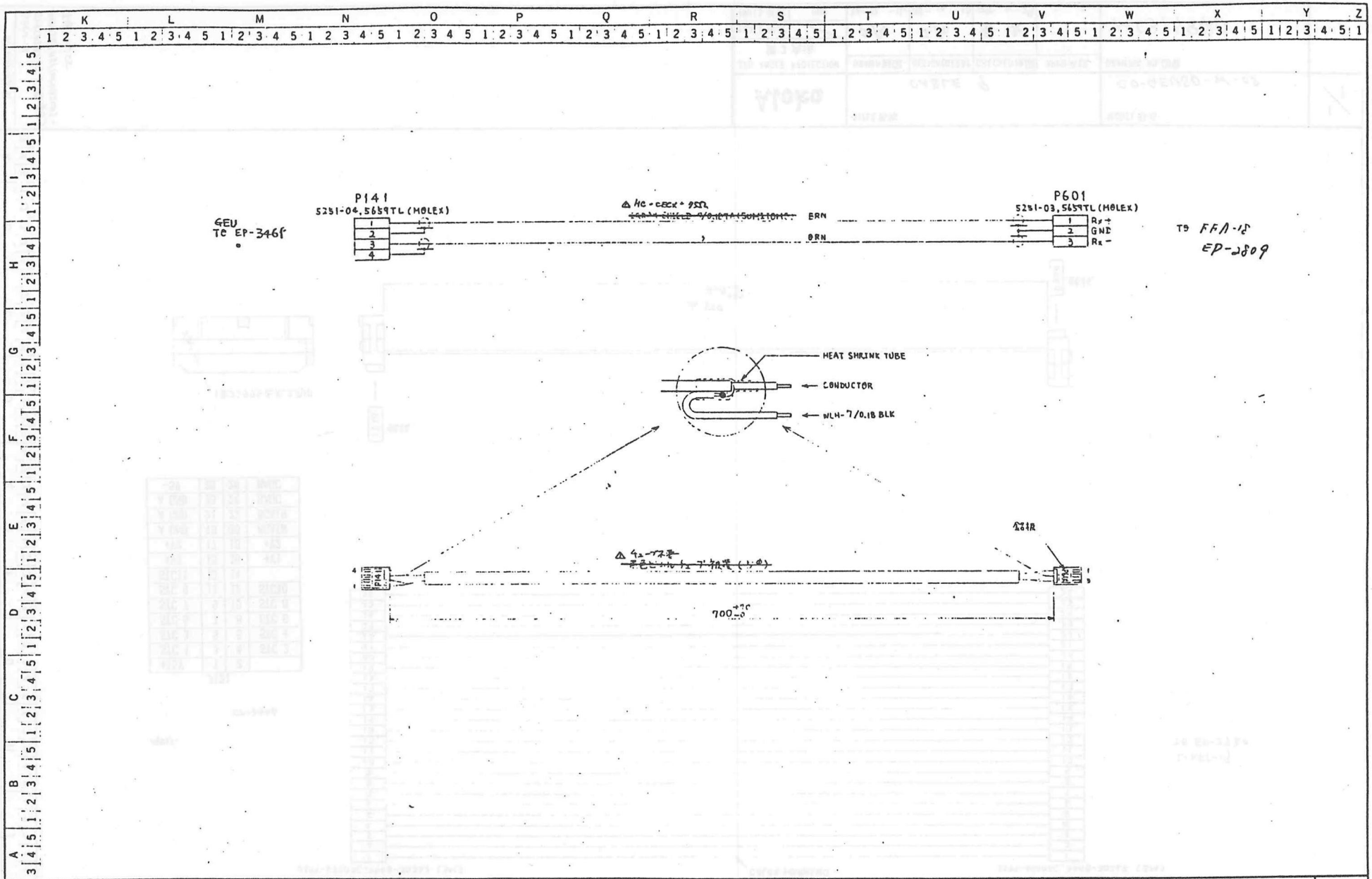


| | | | | | |
|---|---|---|---|---|---|
| Aloka | TITLE 名称: CABLE 11 | | | | MODEL 形名: CO-GFU50-J-08 |
| 3RD ANGLE PROJECTION 第3角法 | DRAWN 製図 | DESIGNED 設計 | CHECKED 検図 | APPD 承認 | DRAWING NO. 図番: MC 314841 |
| SCALE 尺度 | 工房 | 工房 | 三 | | |
| UNITS 単位 mm | '88-12-20 | '88-12-20 | 88-12-29 | | |

1/1

REVISIONS 変更

△91-2-14 EMI対応(統計変更) MW04580 N17(GM162 40) 作者 M0255

L-013-10-82

7-12

# MSS－P－1．5A ケーブル接続手順

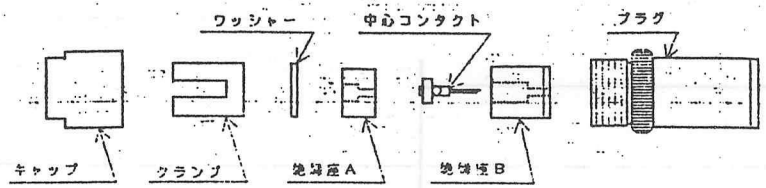


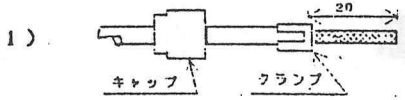


1）

2）

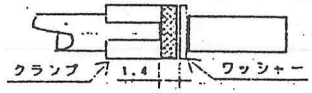


3）

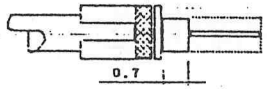


4）

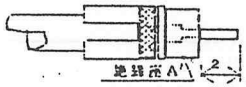


5）

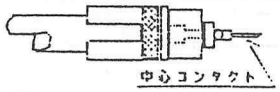


6）

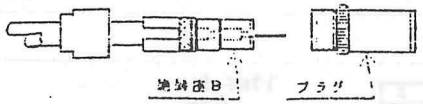


1　左図の如く外部被覆を切断する。
2　ケーブルにキャップを通す。
3　クランプを挿入する。

4　左図のようにシールドをはぐし折り返し
ワッシャーを挿入後1.4mmにて
シールドを切断する。
（クランプはスリ割り方向に被っておく事）

5　内部被覆を加工する。

6　絶縁座Aを挿入し芯線を加工する。
（絶縁座の挿入方向を間違えない事）

7．中心コンタクトをケーブルの芯線に挿入し
ハンダ付けをする。
（ハンダの盛り上がりのない様注意）

8　絶縁座Bを挿入する。
絶縁座Aと点検し絶縁座Bが強く当る事を
確認する事。
9　プラグを挿入する。
10　キャップとプラグが一致する所迄ねじ込
む。

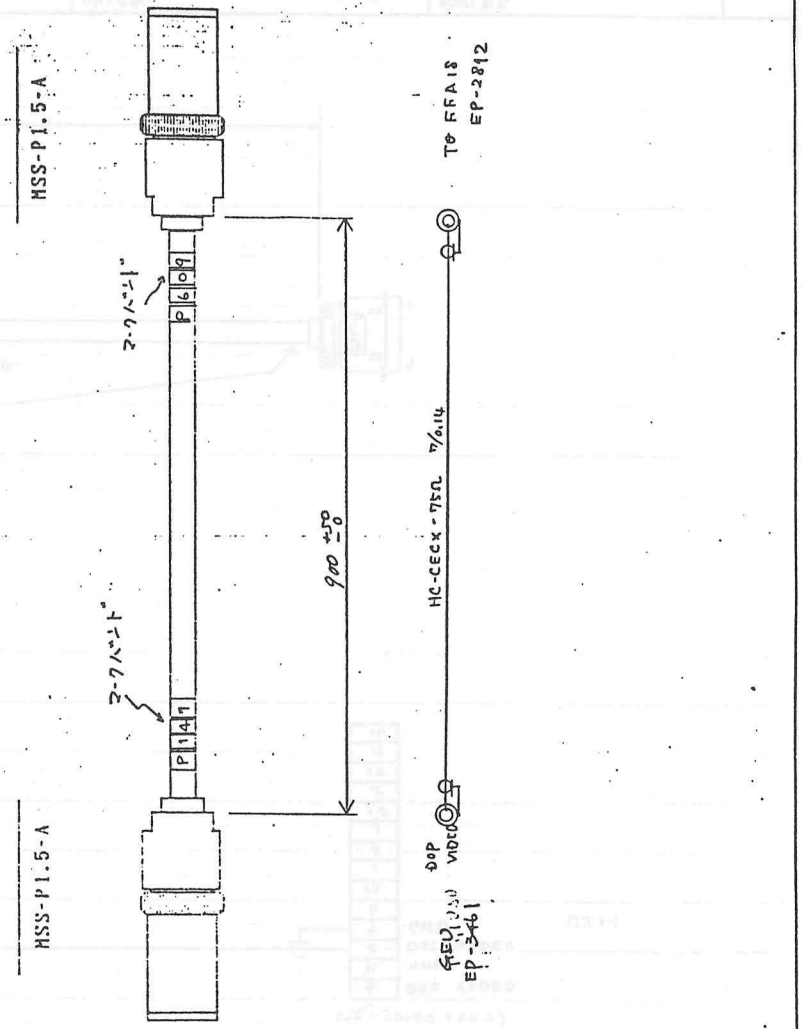


REVISIONS変更

| | | | | | |
|---|---|---|---|---|---|
| Aloka | TITLE名称 CABLE 12 | | | | MODEL形名 CO-GEU5D-K-10 (NCS-1309) |
| 3RD ANGLE PROJECTION 第3角法 | DRAWN製図 工度 | DESIGNED設計 土度 | CHECKED検図 宮収 | APPD承認 | DRAWING NO.図番 MC314842 |
| SCALE尺度 | | | | | |
| UNITS単位 mm | | | | | |

1/1

L-013-10-82-A3

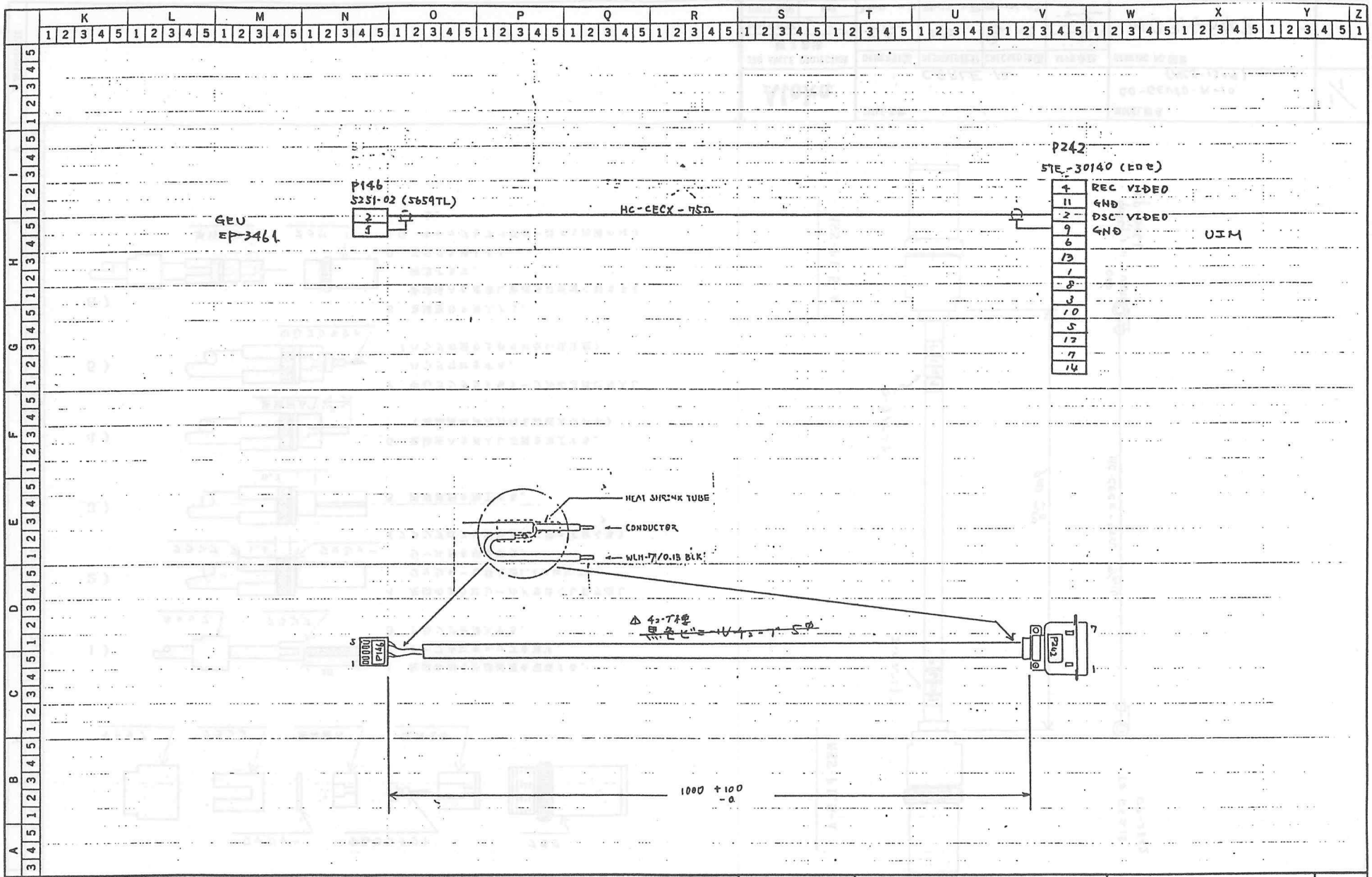


| | | | | | | |
|---|---|---|---|---|---|---|
| REVISIONS変更 | Aloka | TITLE名称: CABLE 13 | | | | MODEL形名: CO-GEU64-S-10 |
| | 3RD ANGLE PROJECTION 第3角法 | DRAWN製図 | DESIGNED設計 | CHECKED検図 | APPD承認 | DRAWING NO.図番: MC 314843 |
| | SCALE尺度 / UNITS単位 mm | 土屋 '88-12-16 | 土屋 '88-12-16 | 吉水 '88.12.19 | | |

L-013-10-82-A3

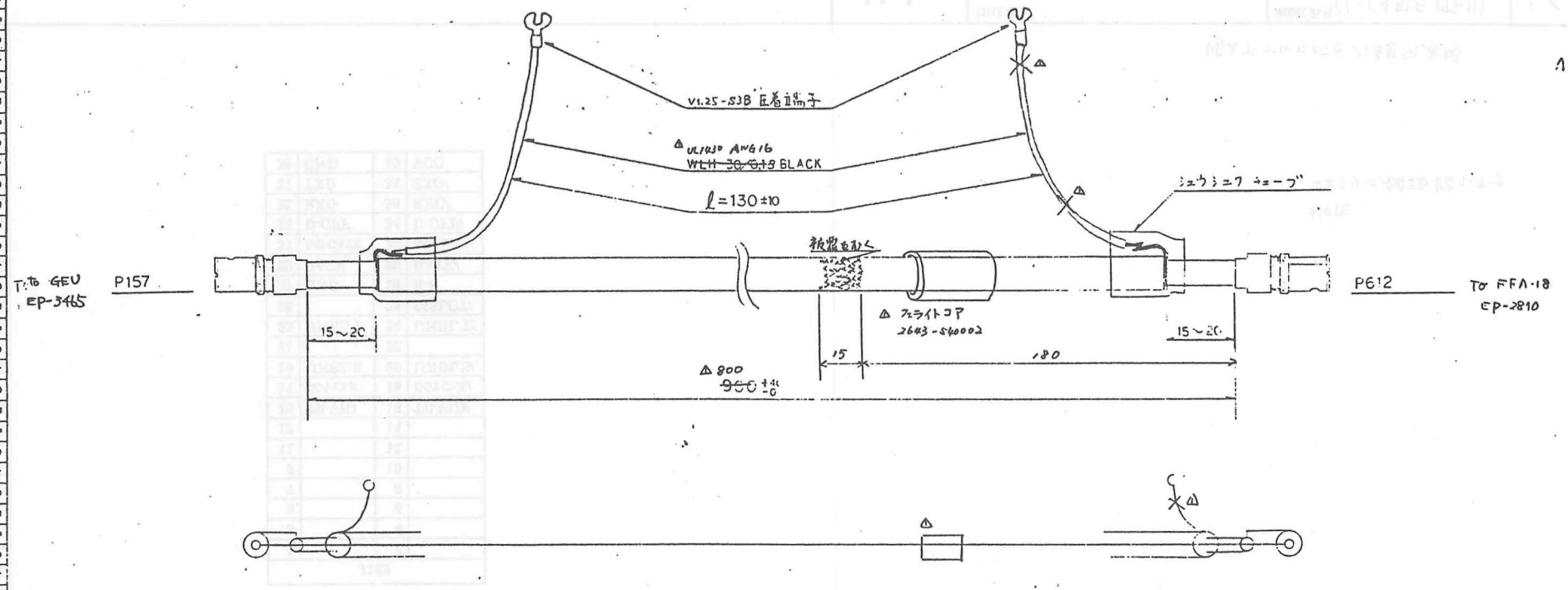


Cable
ケーブル： 仕 792-264　2重シールド同軸ケーブル（潤工社）

P157, 612　MSS-P-1.5A(0/)(HIROSE)

注. ○ケーブルは2重シールド線であるので GND用リード線は外側シールド線にハンダ付ける事。
○コネクタからケーブルの立上りは十分な自由度がある事。

REVISIONS変更
△91-2-14
EP-0-1
(フェライトコア追加)
(長さ変更)
(ケースアーマル変更(ハイナビ))
(MW4580-2051(0/M16240)-
1/2 M0255

| | | | | | |
|---|---|---|---|---|---|
| Aloka | TITLE名称 CABLE -15 | | | | MODEL形名 CO-GEU50-N-10 |
| 3RD ANGLE PROJECTION 第3角法 | DRAWN製図 | DESIGNED設計 | CHECKED検図 | APPD承認 | DRAWING NO.図番 MC 314844 |
| SCALE 尺度 | 工房 | 工房 | 宮坂 | | |
| UNITS 単位 mm | 86-12-15 | 86-12-15 | 86 12 29 | | |

1/1

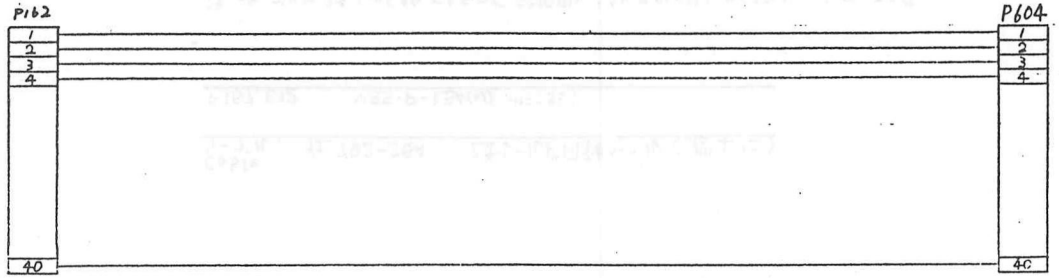


| J162 | | | |
|---|---|---|---|
| 1 | | 2 | |
| 3 | | 4 | |
| 5 | | 6 | |
| 7 | | 8 | |
| 9 | | 10 | |
| 11 | | 12 | |
| 13 | | 14 | |
| 15 | TR VID | 16 | TR VID/ |
| 17 | DOT CLK | 18 | DOT CLK/ |
| 19 | UNBL S | 20 | UNBL S/ |
| 21 | | 22 | |
| 23 | UNBL T | 24 | UNBL T/ |
| 25 | | 26 | 56SLCT/ |
| 27 | GND | 28 | R-R |
| 29 | RATE | 29 | RATE/ |
| 31 | B/D GATE | 32 | B/D GATE/ |
| 33 | D-OFF | 34 | D-OFF/ |
| 35 | RXD | 36 | RXD/ |
| 37 | TXD | 38 | TXD/ |
| 39 | GND | 40 | VCC |

NOTE.
コネクタに銘板貼り付け

購入ケーブルに付き外観図省略

REVISIONS 変更

| | | | | | |
|---|---|---|---|---|---|
| Aloka | TITLE 名称 CBL 17 | | | MODEL 形名 (L-CABLE-177-11) CO-GEU50-Q-11 | 1/1 |
| 3RD ANGLE PROJECTION 第3角法 | DRAWN 製図 | DESIGNED 設計 | CHECKED 検図 | APPD 承認 | DRAWING NO. 図番 |
| SCALE 尺度 | 秋山 | 土屋 | 宇坂 | 1枚 | MC 316211 |
| UNITS 単位 mm | 89-6-29 | 89-6-29 | 89-6-30 | | |

L-013-10-82-

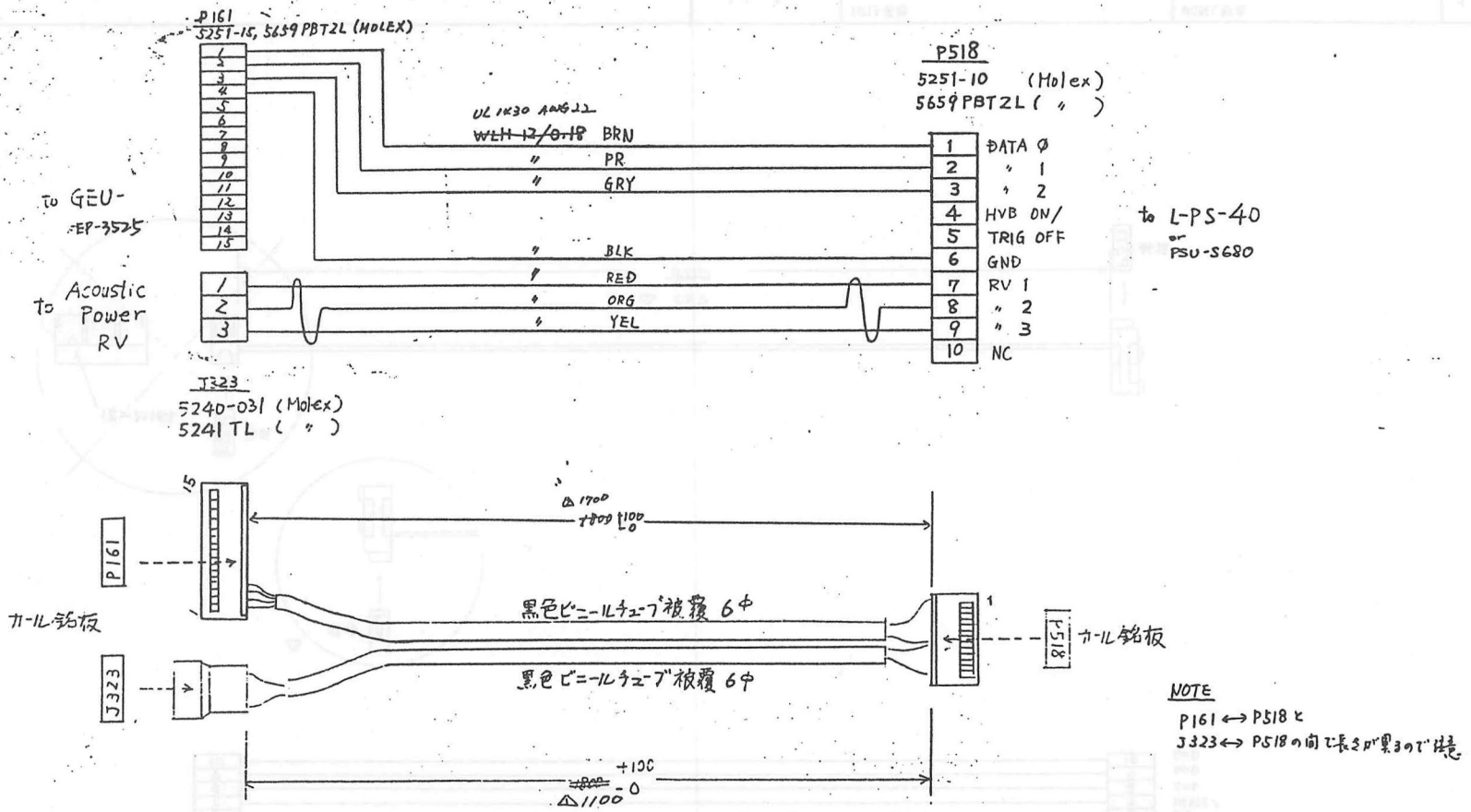


REVISIONS変更
△ 89-12-29
長マ変更
HW95552 #51-
指 1段-14-92K9
△ 91-2-18
EHI対応
(長さ変更)
HW04580 #51 (HW16200)-
(F)は HD255

| | | | |
|---|---|---|---|
| Aloka | TITLE 名称: CABLE .18B | MODEL 形名: CO-PSC-108-A-13 | 1/1 |
| 3RD ANGLE PROJECTION 第3角法 | DRAWN 製図 / DESIGNED 設計 / CHECKED 検図 / APPD 承認 | DRAWING NO. 図番 | |
| SCALE 尺度 / UNITS 単位 mm | Y. Yamada '88-12-28 / 宮城 '89.12.29 | MC 316040 | |

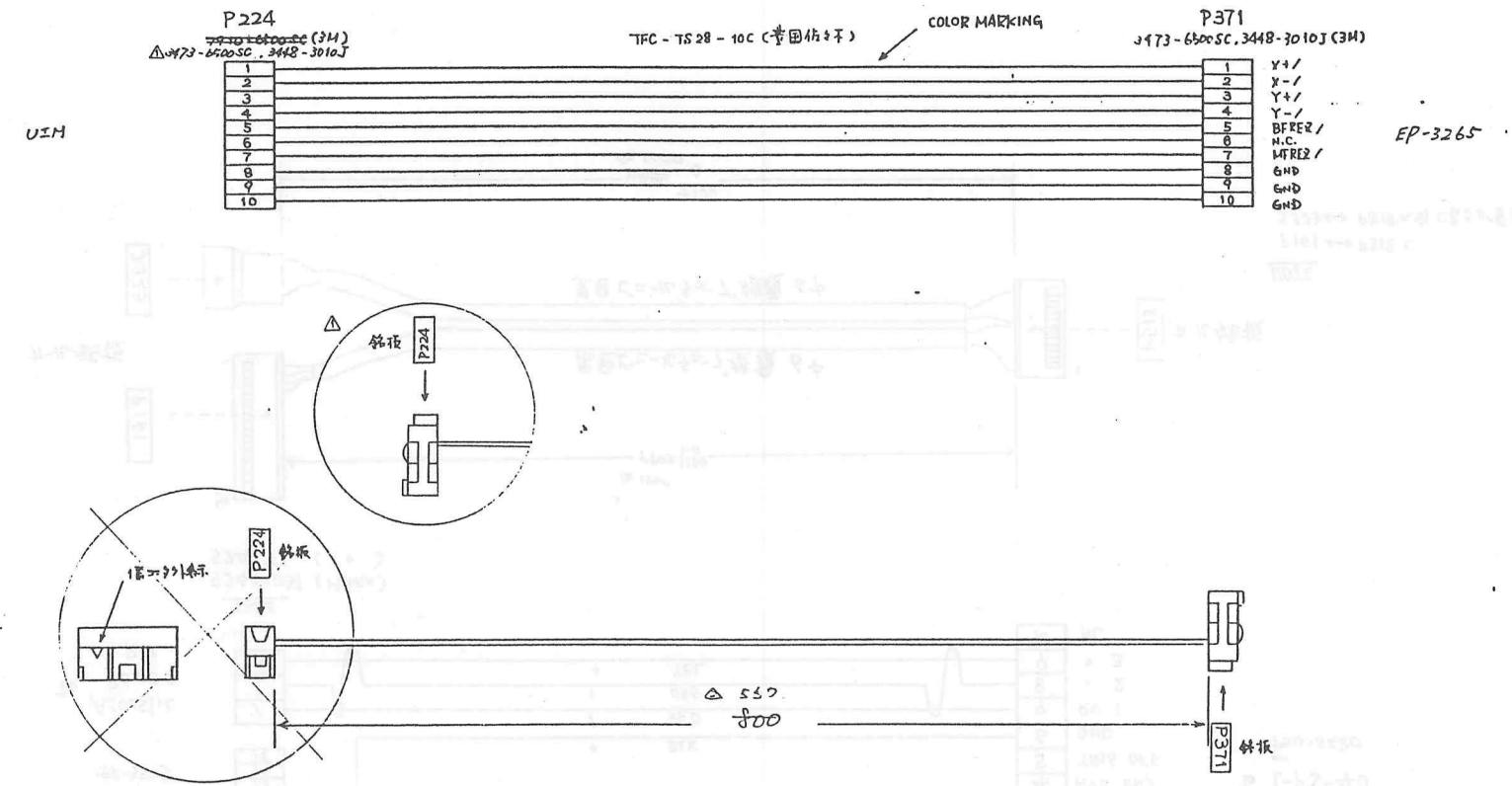


| | | | | | |
|---|---|---|---|---|---|
| Aloka | TITLE 名称: CABLE 30B | | | MODEL 形名: CO-PSC 108-J-08B | 1/1 |
| 3RD ANGLE PROJECTION 第3角法 | DRAWN 製図: 佐藤 | DESIGNED 設計: 佐藤 | CHECKED 検図: 佐藤 | APPD 承認 | DRAWING NO. 図番: MC 314398 |
| SCALE 尺度 | | | | | |
| UNITS 単位 mm | | | | | |

REVISIONS 変更

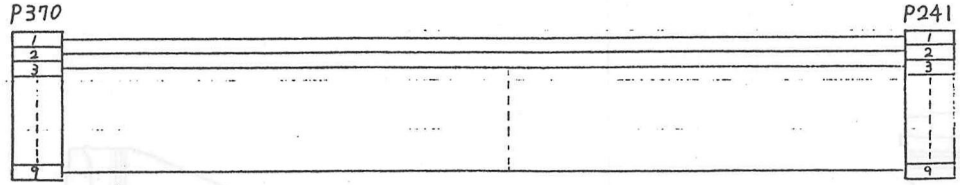


ZP-3265-3

VIM

| J370 | |
|---|---|
| 1 | GND |
| 2 | TXD+ |
| 3 | TXD− |
| 4 | RXD+ |
| 5 | RXD− |
| 6 | TXC+ |
| 7 | TXC− |
| 8 | RXC+ |
| 9 | RXC− |
| 10 | |

NOTE.
コネクタに銘板貼りくすけ.

常用ケーブルにくすき外観図省略

| | | | | | | |
|---|---|---|---|---|---|---|
| Aloka | TITLE 名称 CBL 31 | | | | MODEL 形名 (NCS 4008) CO-PSC108-P-08 | 1/1 |
| 3RD ANGLE PROJECTION 第3角法 | DRAWN 製図 秋山 89-6-29 | DESIGNED 設計 土屋 89-6-29 | CHECKED 検図 宮坂 89-6-30 | APPD 承認 | DRAWING NO. 図番 MC316041 | |
| SCALE 尺度 | | | | | | |
| UNITS 単位 mm | | | | | | |

REVISIONS 変更

L-013-10-82-A3

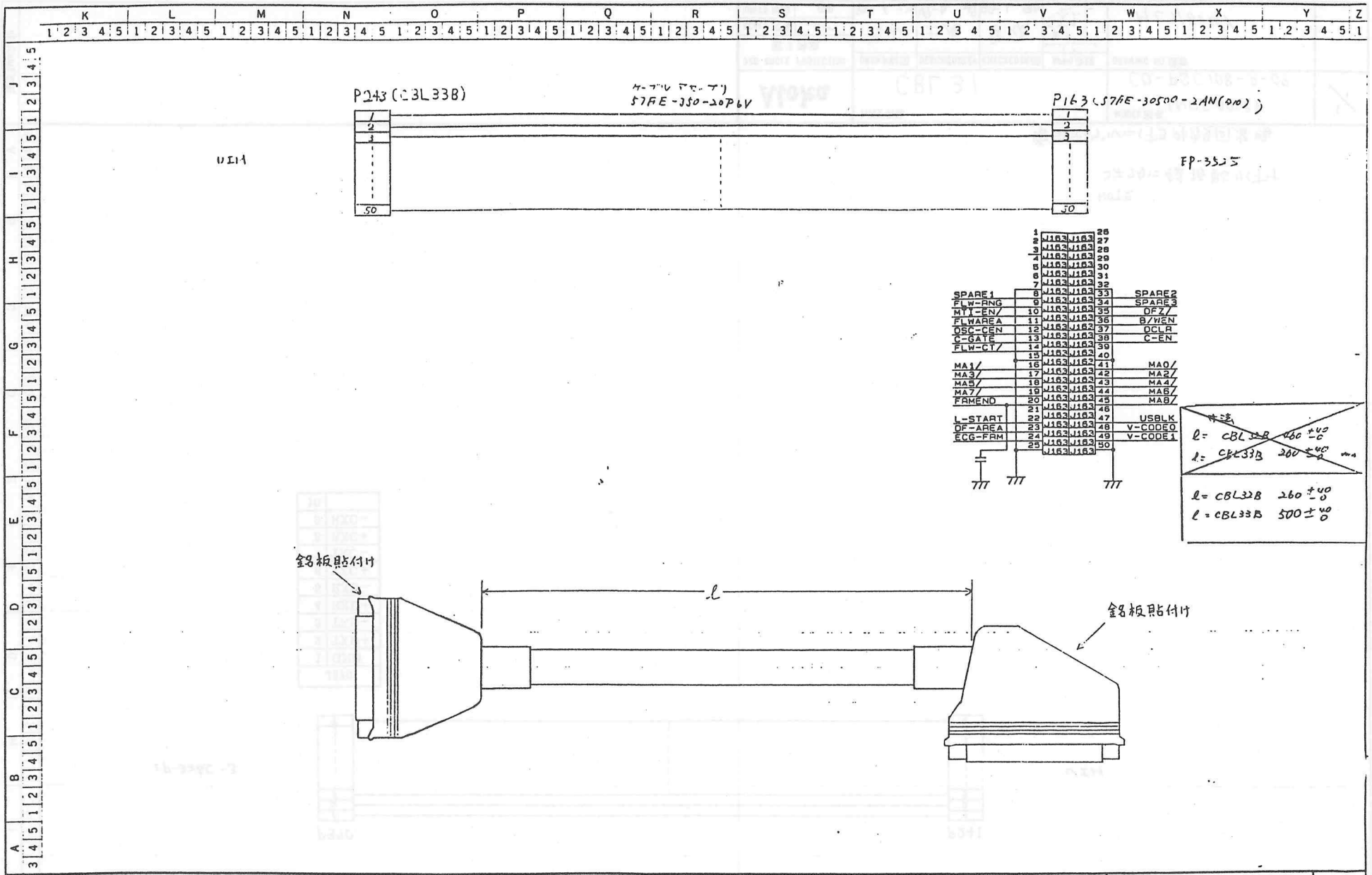


| | | | | | |
|---|---|---|---|---|---|
| Aloka | TITLE 名称: CABLE33B | | | MODEL 形名: CO-GFU50-Y-04 | 1/1 |
| 3RD ANGLE PROJECTION 第3角法 | DRAWN 製図 | DESIGNED 設計 | CHECKED 検図 | APPD 承認 | DRAWING NO. 図番: MC316[illegible] |
| SCALE 尺度 | | | | | 出図 '82.12.16 アロカ |
| UNITS 単位 mm | | | | | |

L 013-10-82-A

REVISIONS 変更

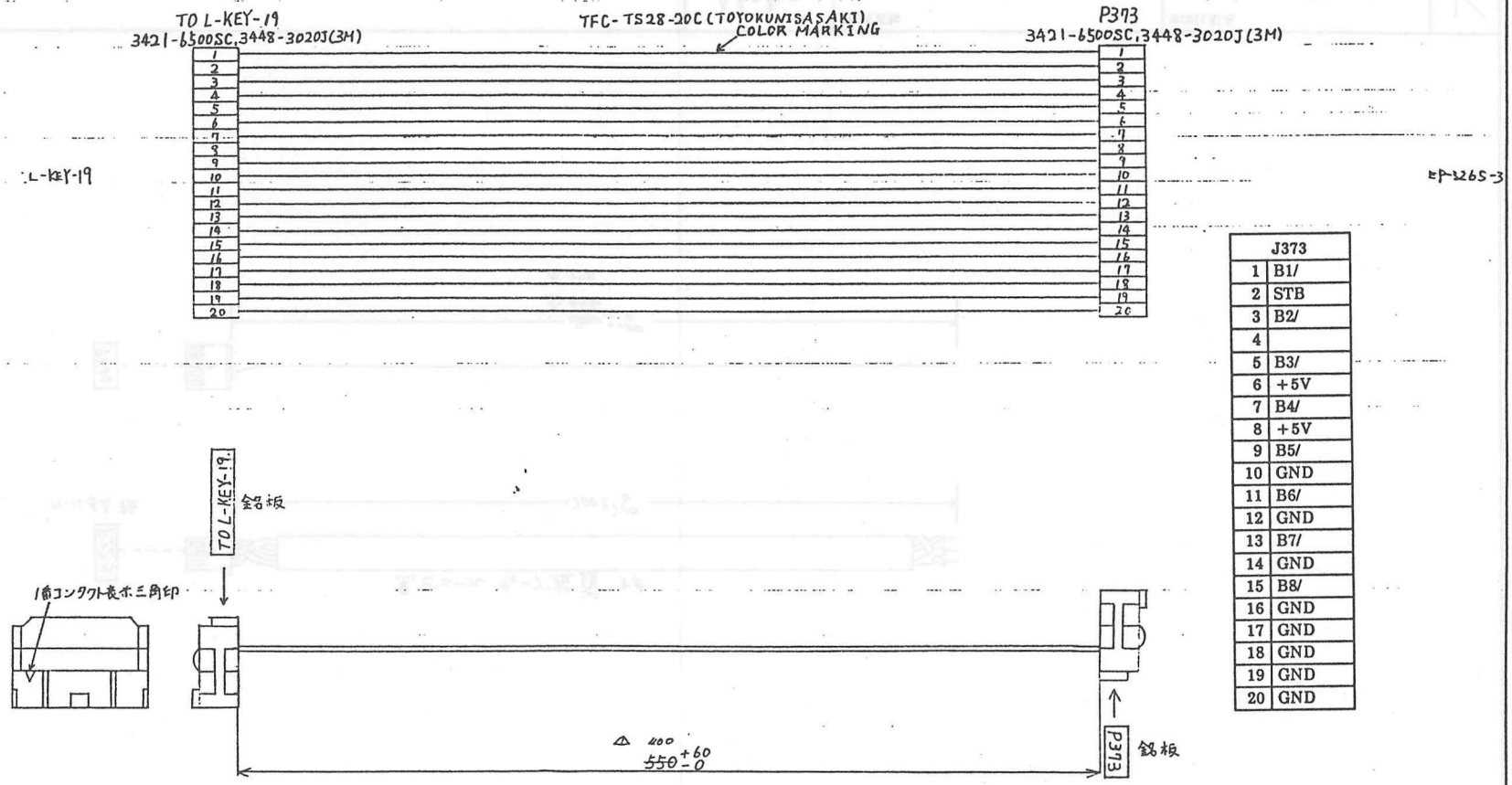


| J373 | |
|---|---|
| 1 | B1/ |
| 2 | STB |
| 3 | B2/ |
| 4 | |
| 5 | B3/ |
| 6 | +5V |
| 7 | B4/ |
| 8 | +5V |
| 9 | B5/ |
| 10 | GND |
| 11 | B6/ |
| 12 | GND |
| 13 | B7/ |
| 14 | GND |
| 15 | B8/ |
| 16 | GND |
| 17 | GND |
| 18 | GND |
| 19 | GND |
| 20 | GND |

REVISIONS変更

△91-2-14
EMI対応(ケーブル長方向)
HUOKS80ns(01M16240)-
17ヵ MO255

| | | | | | |
|---|---|---|---|---|---|
| Aloka | TITLE名称 CBL 37 | | | | MODEL形名 CO-PSC108-L-06 |
| 3RD ANGLE PROJECTION 第3角法 | DRAWN製図 | DESIGNED設計 | CHECKED検図 | APPD承認 | DRAWING NO.図番 MC316043 |
| SCALE 尺度 | 私山 | 土屋 | 安坂 | | |
| UNITS 単位 mm | 89-6-29 | 89-6-29 | 89-6-30 | | |

L-013-10-82-A3

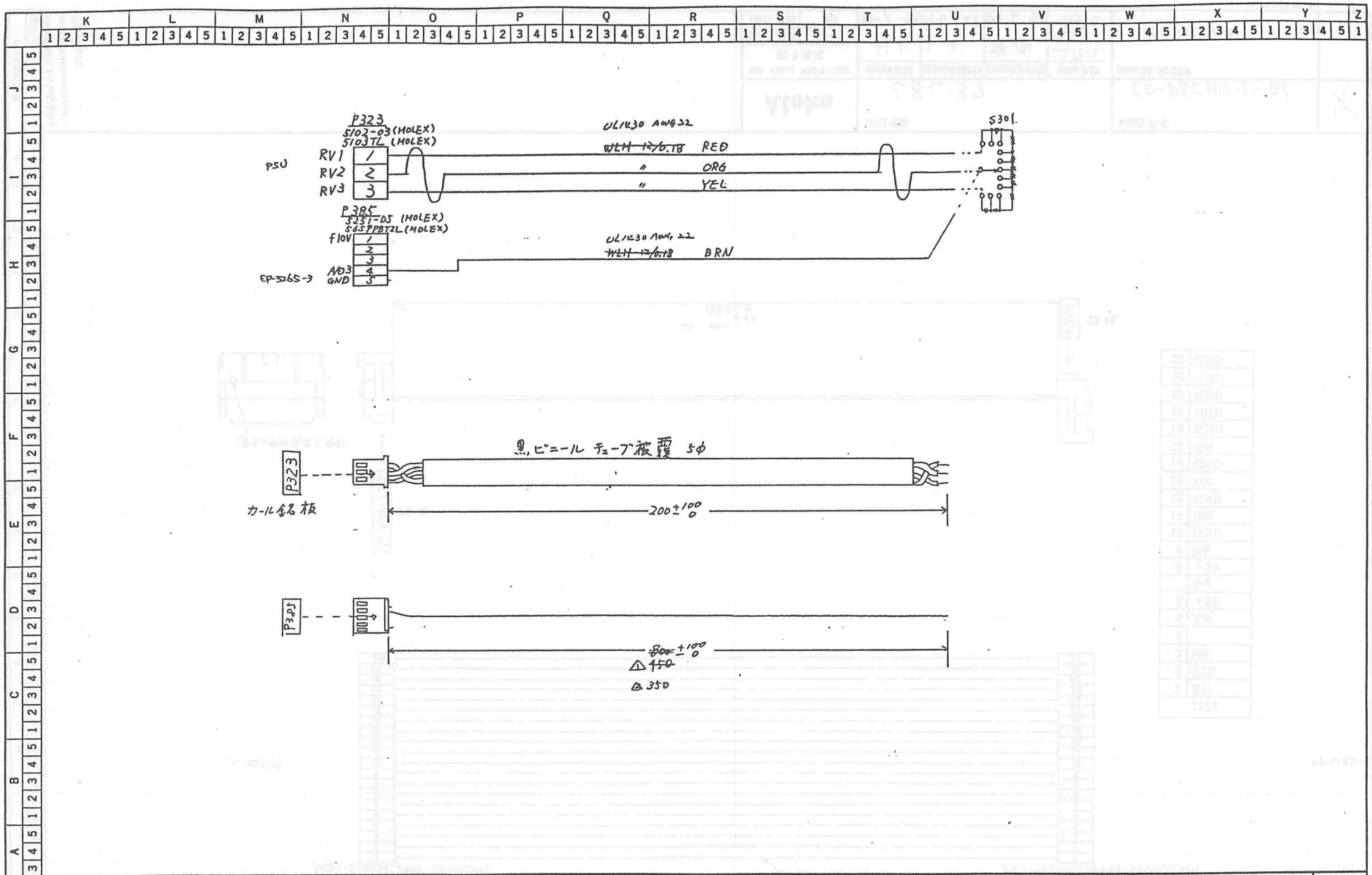


REVISIONS変更
△89-12-27
長さ変更
MW95552 #51-
箱 1枚・M9249
△91-2-14
FMI対応(長さ変更)
MW04580 #51(01M16240)
ICFG M0255

| | | | | | |
|---|---|---|---|---|---|
| Aloka | TITLE名称 CABLE 38B | | | | MODEL形名 CO-PSC-108-D-08 |
| 3RD ANGLE PROJECTION 第3角法 | DRAWN製図 | DESIGNED設計 | CHECKED検図 | APPD承認 | DRAWING NO.図番 MC316044 |
| SCALE 尺度 | Y.Yamada | | 宇吹 | | |
| UNITS 単位 mm | '88-12-28 | | 85-12-29 | | |

1/1

L-013-10-82-A3

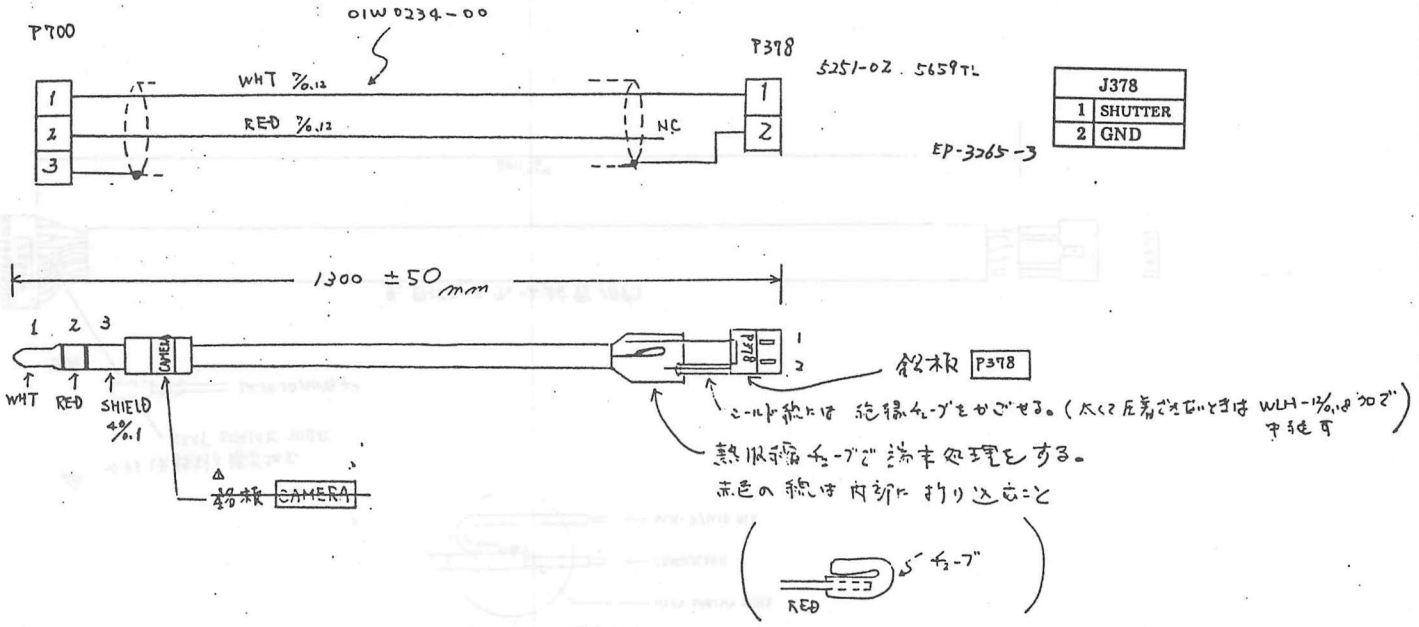


| J378 | |
|---|---|
| 1 | SHUTTER |
| 2 | GND |

| | | | | | |
|---|---|---|---|---|---|
| Aloka | TITLE 名称 CABLE 43 | | | MODEL 形名 CO-PSC108-E-15 | 1/1 |
| 3RD ANGLE PROJECTION 第3角法 | DRAWN 製図 | DESIGNED 設計 | CHECKED 検図 | APPD 承認 | DRAWING NO. 図番 |
| SCALE 尺度 | 土屋 | 土屋 | 宮坂 | | HC 314857 |
| UNITS 単位 mm | 88-12-20 | 88-12-20 | 88-12-29 | | |

REVISIONS 変更

L 013 10 82 A3

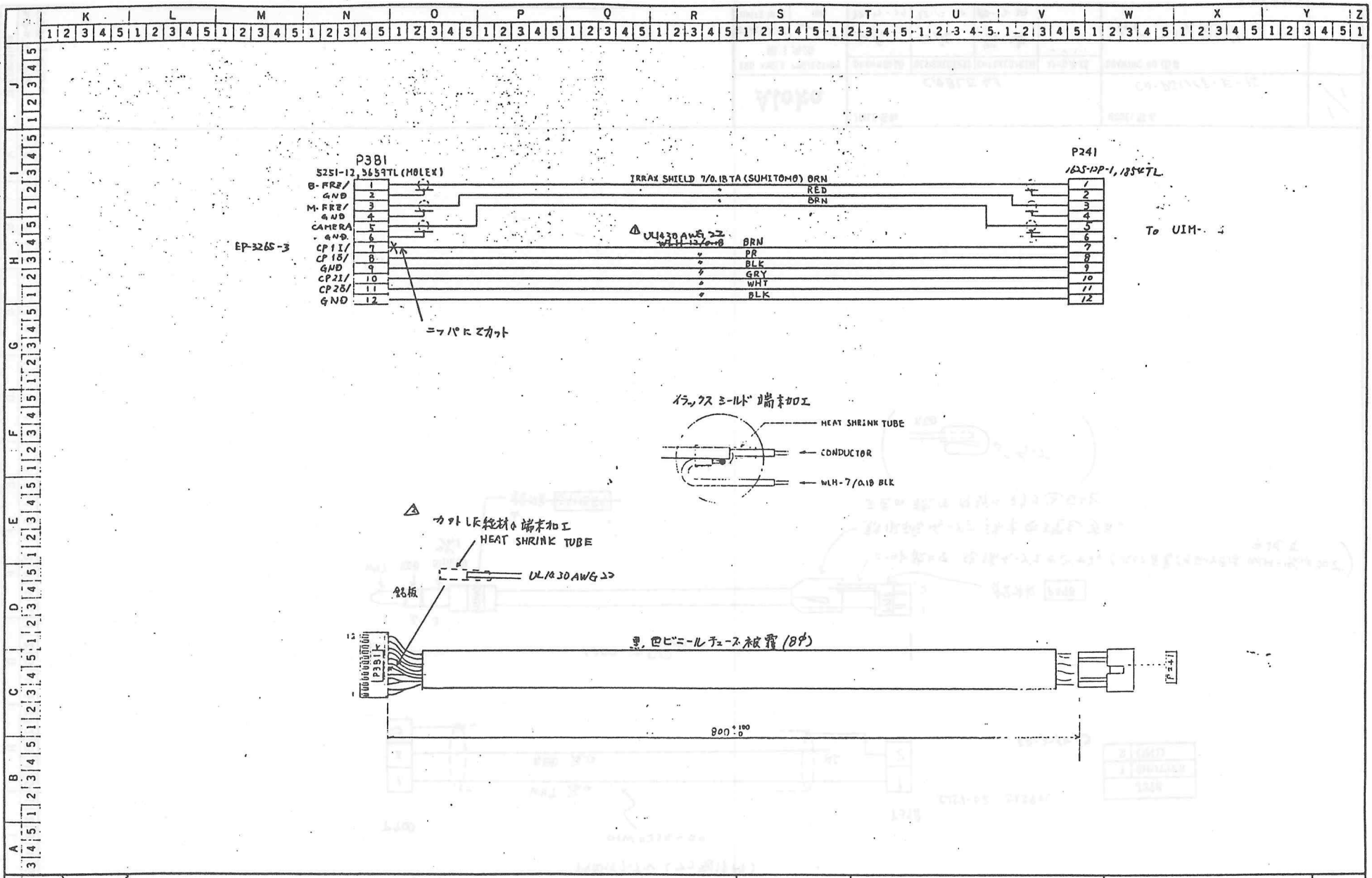


REVISIONS変更
△90-3-22 土屋
UL線変更
HW-96012#1(91M1/28 ...)
△90-5-17 西谷
SSZ-700 接続時不
見合材料
HW-96012#36(91M1/29 ...)
作者 -#5-M0028

| Aloka | TITLE名称 | | | | MODEL形名 | 1/1 |
|---|---|---|---|---|---|---|
| | CABLE 44 C △2 | | | | CO-PSC1C8-F-08 | |
| 3RD ANGLE PROJECTION 第3角法 | DRAWN製図 | DESIGNED設計 | CHECKED検図 | APPD承認 | DRAWING NO.図番 | |
| SCALE 尺度 | 土屋 | 土屋 | 宮坂 | | MC316045 | |
| UNITS 単位 mm | 88-12-15 | 88-12-15 | 88-12-29 | - - | | |

L-013-10-82-

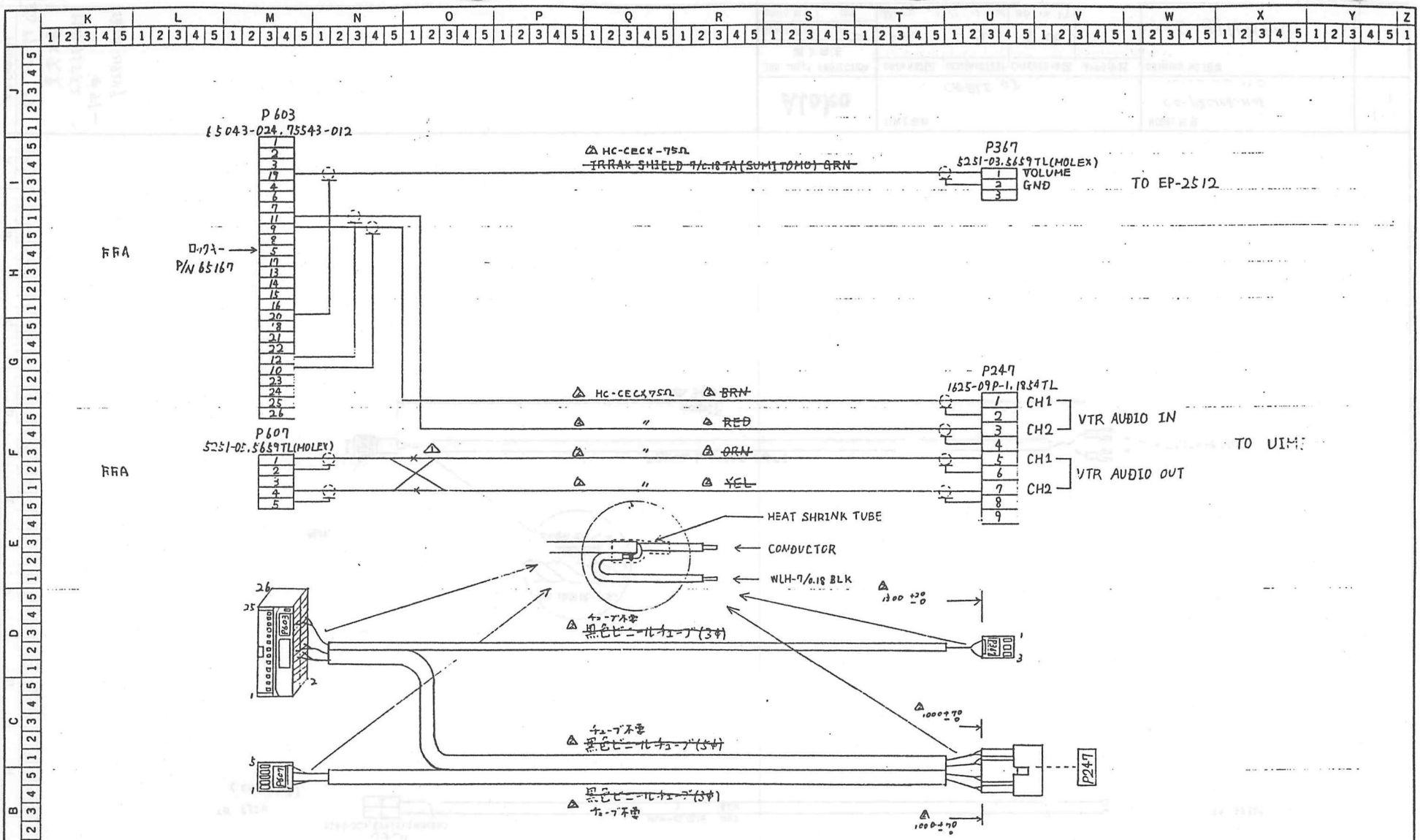


REVISIONS変更

△90-1-8 両行
MW-95552
91M17293~
指1枚M9249

△91-2-14
EMI対応
(結束変更)
(長さ-57%)
(　　)
MW04580 US1(OM16240)-
行者 M0255

| Aloka | TITLE名称 | MODEL形名 | 1/1 |
|---|---|---|---|
| | CABLE 463 | CO-PSC108-S-18 | |

| 3RD ANGLE PROJECTION 第3角法 | DRAWN製図 | DESIGNED設計 | CHECKED検図 | APPD承認 | DRAWING NO.図番 |
|---|---|---|---|---|---|
| SCALE 尺度 | 利山 | 土屋 | 企画G 52.9.10 | 1枚 | MC 316210 |
| UNITS 単位 mm | 89-6-23 | 89-6-28 | 近藤 | 1 | |

L-013-10-82-A3

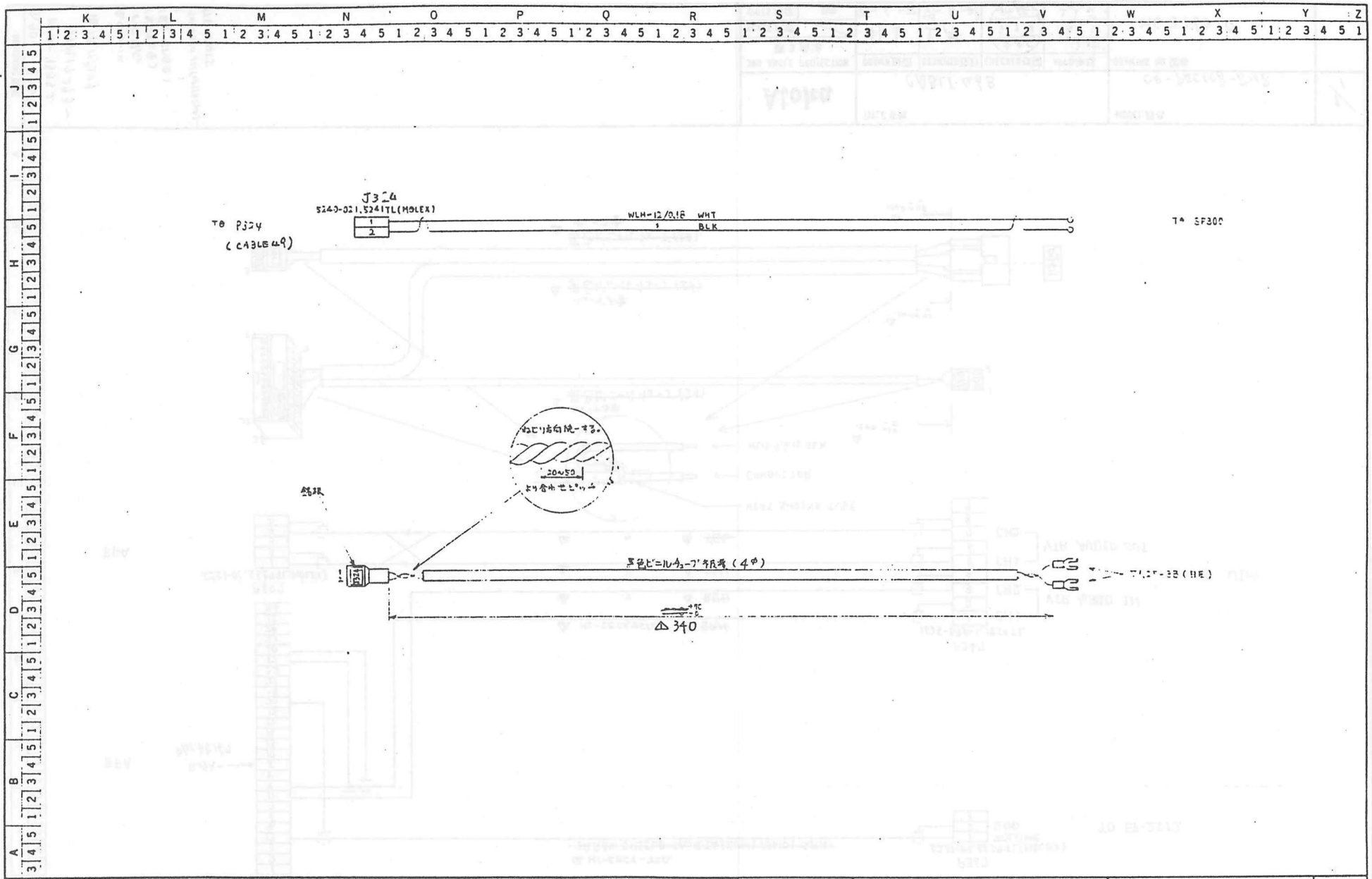


REVISIONS 変更
△ 89-12-29
長マ変更
MW 95552
#51—
指1段-H9249

| | | | | | |
|---|---|---|---|---|---|
| Aloka | TITLE 名称 CABLE 48 | | | | MODEL 形名 CO-PSC108-H08 |
| 3RD ANGLE PROJECTION 第3角法 | DRAWN 製図 | DESIGNED 設計 | CHECKED 検図 | APPD 承認 | DRAWING NO 図番 |
| SCALE 尺度 | 工屋 | 工屋 | 宮坂 | | MC 314860 |
| UNITS 単位 mm | 88-12-20 | 88-12-20 | 88 12 24 | | |

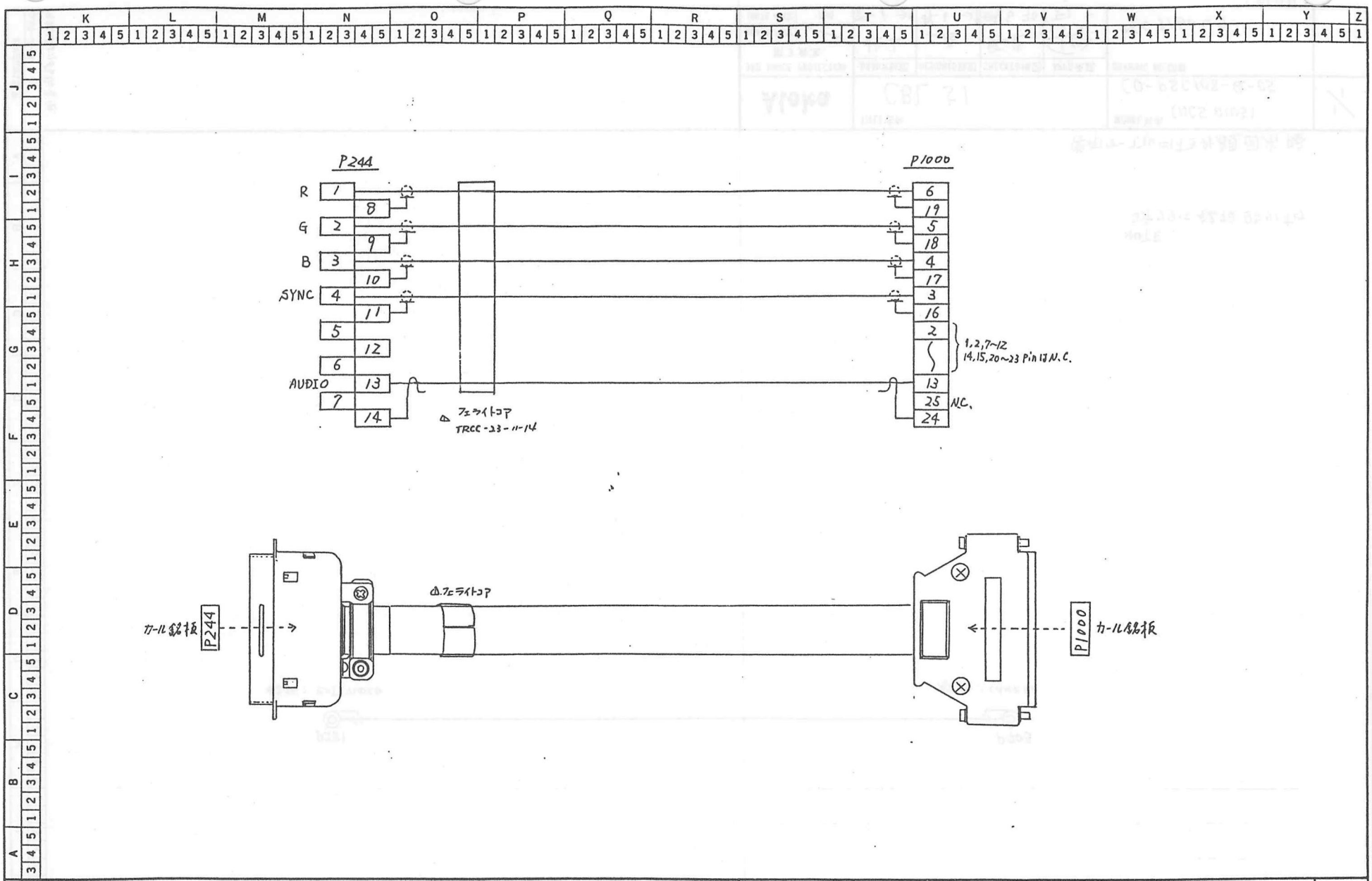


| | | | | | |
|---|---|---|---|---|---|
| Aloka | TITLE 名称 CABLE 50 | | | MODEL 形名 CL-CABLE301-16 CO-UIM-324-K-19 | 1/1 |
| 3RD ANGLE PROJECTION 第3角法 | DRAWN 製図 Y. Yamada 88-12-28 | DESIGNED 設計 | CHECKED 検図 | APPD 承認 | DRAWING NO. 図番 MC316046 |
| SCALE 尺度 | | | | | |
| UNITS 単位 mm | | | | | |

REVISIONS 変更

L-013-10-82-A3

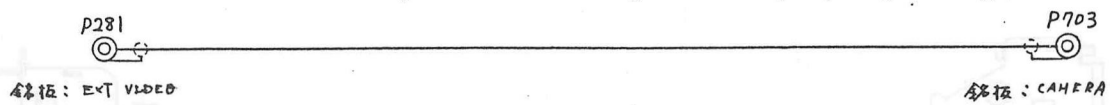


NOTE.
コネクタに銘板貼り付け

常用ケーブルに付き外観図省略

| | | | | | | |
|---|---|---|---|---|---|---|
| Aloka | TITLE 名称 CBL 51 | | | | MODEL 形名 (NCS 0105) CO-PSC108-Q-05 | 1/1 |
| 3RD ANGLE PROJECTION 第3角法 | DRAWN 製図 | DESIGNED 設計 | CHECKED 検図 | APPD 承認 | DRAWING NO. 図番 | |
| SCALE 尺度 / UNITS 単位 mm | 秋山 89-6-29 | 土屋 89-6-29 | 宮俊 89-6-30 | | MC316047 | |

REVISIONS 変更
公89-10-24 土屋
可能状より銘板変更

L-013-10-82-1

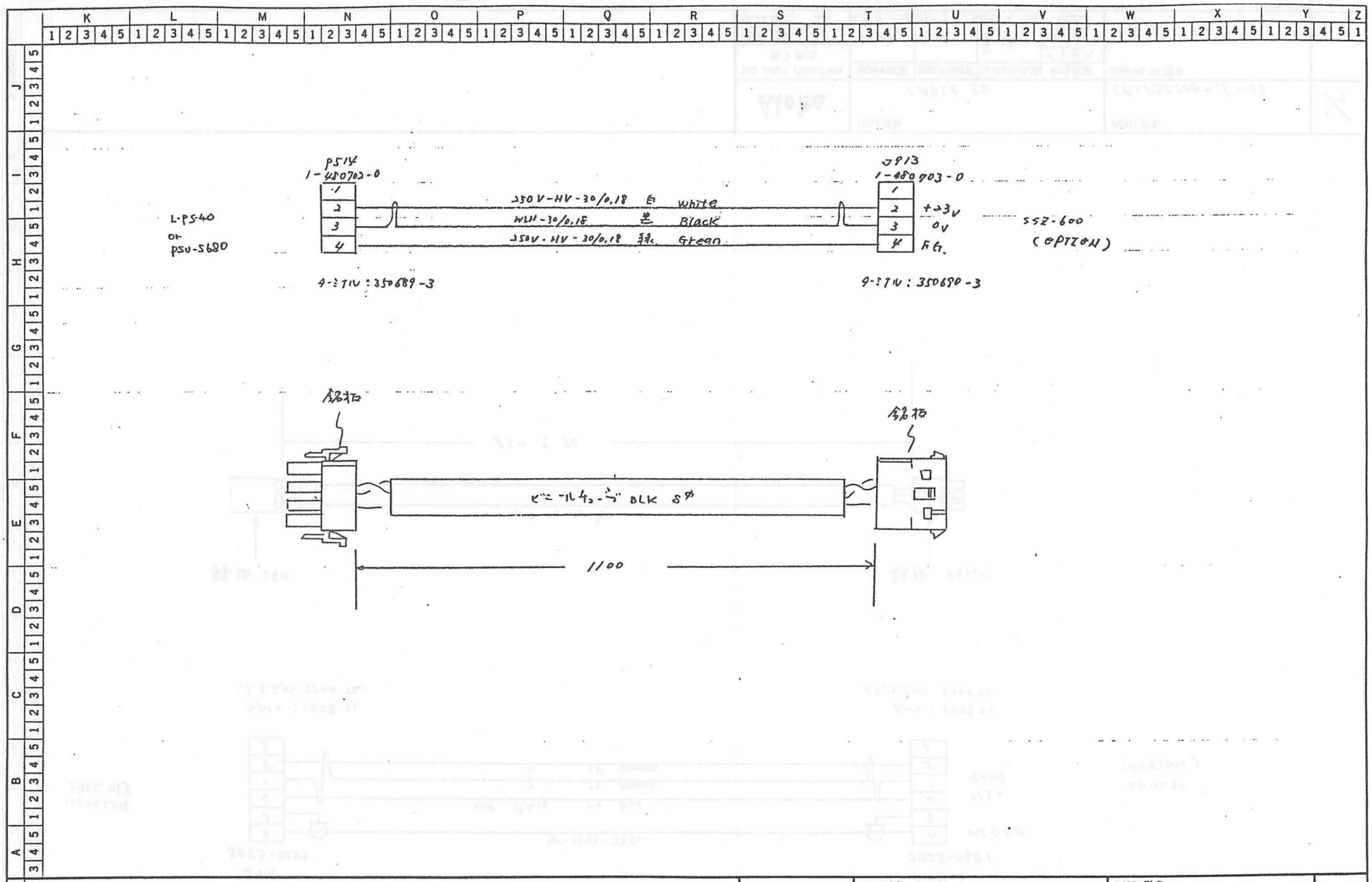


| | | | | | | |
|---|---|---|---|---|---|---|
| Aloka | TITLE名称 CABLE 33 | | | | MODEL形名 CG-LPS40-H-10 | 1/1 |
| 3RD ANGLE PROJECTION 第3角法 | DRAWN製図 | DESIGNED設計 | CHECKED検図 | APPD承認 | DRAWING NO.図番 MC317458 | |
| SCALE尺度 / UNITS単位 mm | 工屋 89-9-18 | 工屋 89-9-18 | 宮坂 89-9-18 | 1松 89.12.20 | | |

REVISIONS変更

L-013-10-82-A3

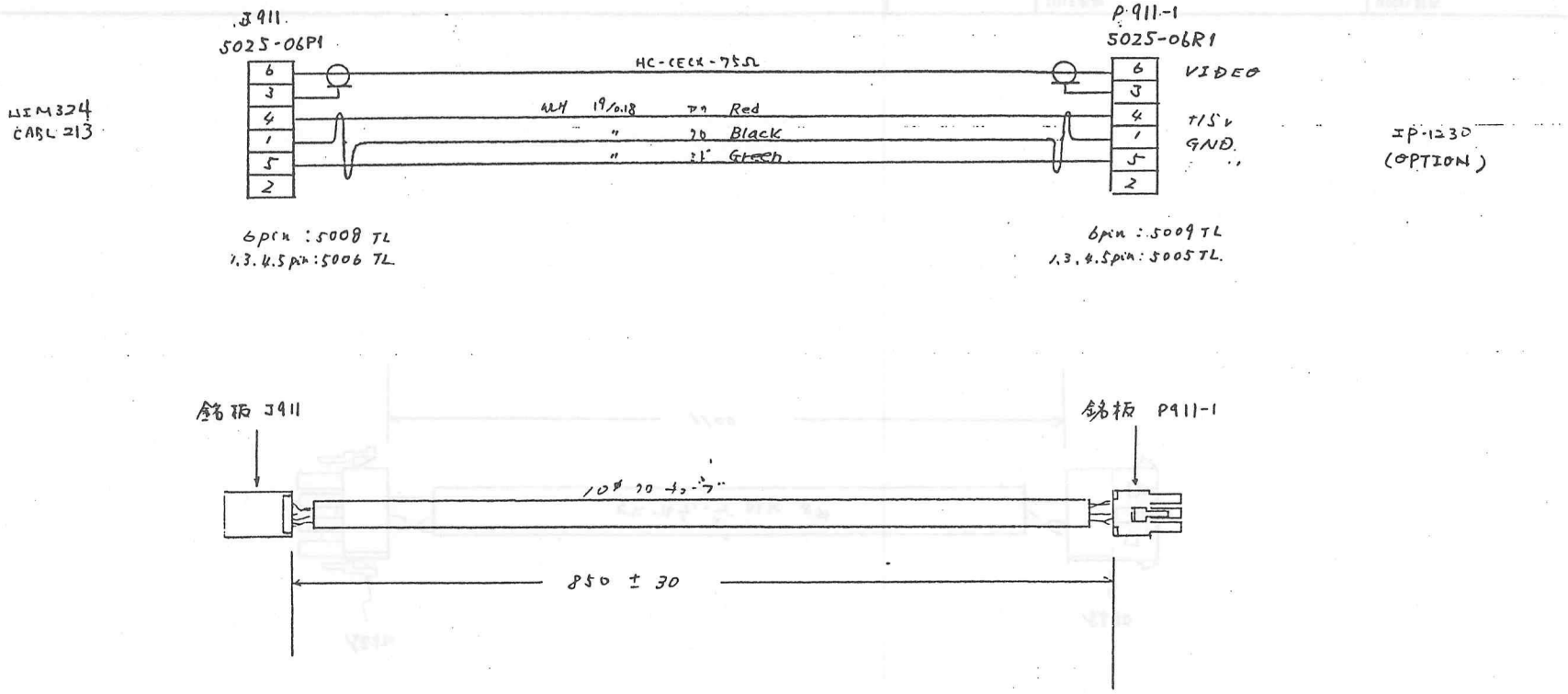


| | | | | | | |
|---|---|---|---|---|---|---|
| Aloka | TITLE 名称: CABLE 5K | | | | MODEL 形名: CC-PSC108-U-09 | 1/1 |
| 3RD ANGLE PROJECTION 第3角法 | DRAWN 製図: 土屋 89-9-18 | DESIGNED 設計: 土屋 89-9-18 | CHECKED 検図: 宮坂 89-9-18 | APPD 承認: 89.12.20 | DRAWING NO. 図番: MC317457 | |
| SCALE 尺度 / UNITS 単位 mm | | | | | | |

L-013-10-82-A3

REVISIONS 変更

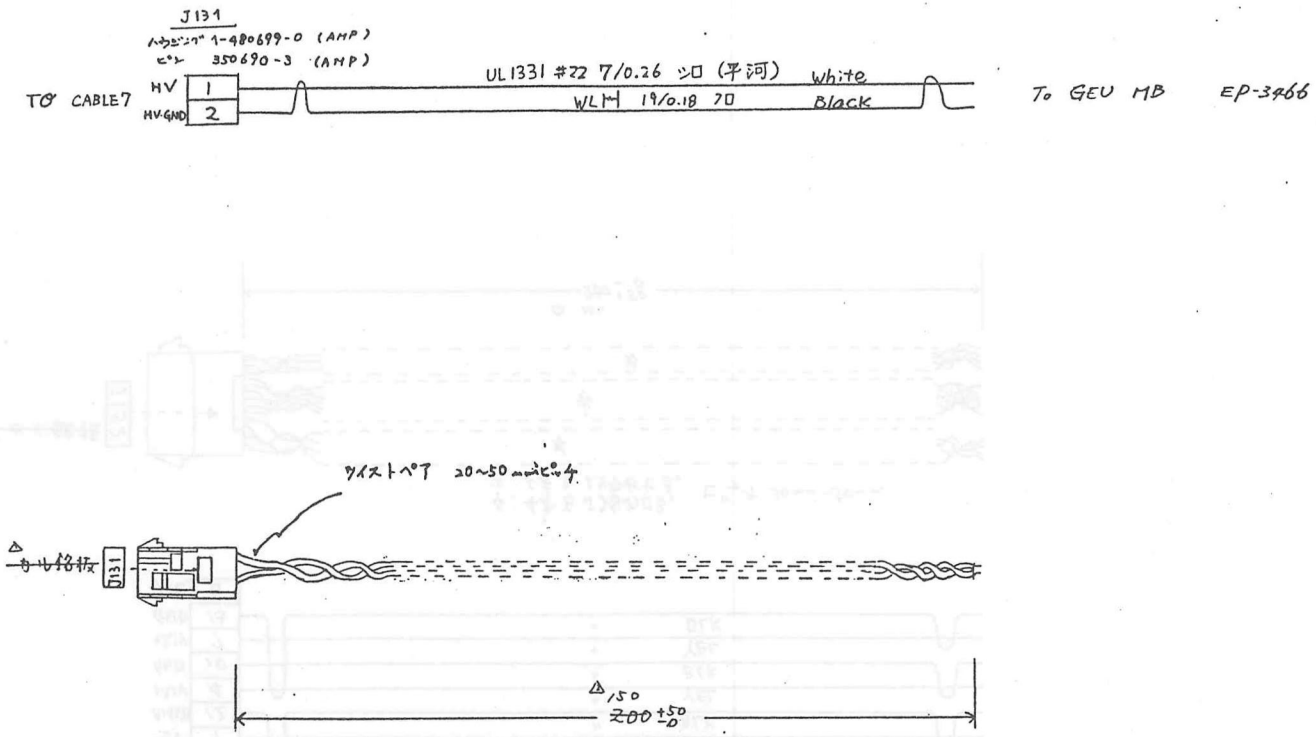


REVISIONS変更

| | | | | | |
|---|---|---|---|---|---|
| Aloka | TITLE名称 CABLE 102B | | | MODEL形名 CO-GEU-50-T-02B | 1/1 |
| 3RD ANGLE PROJECTION 第3角法 | DRAWN製図 Y. Yamada | DESIGNED設計 | CHECKED検図 | APPD承認 | DRAWING NO.図番 MC314863 |
| SCALE尺度 | | | | | |
| UNITS単位 mm | | | | | |

L-013-10-82-A3

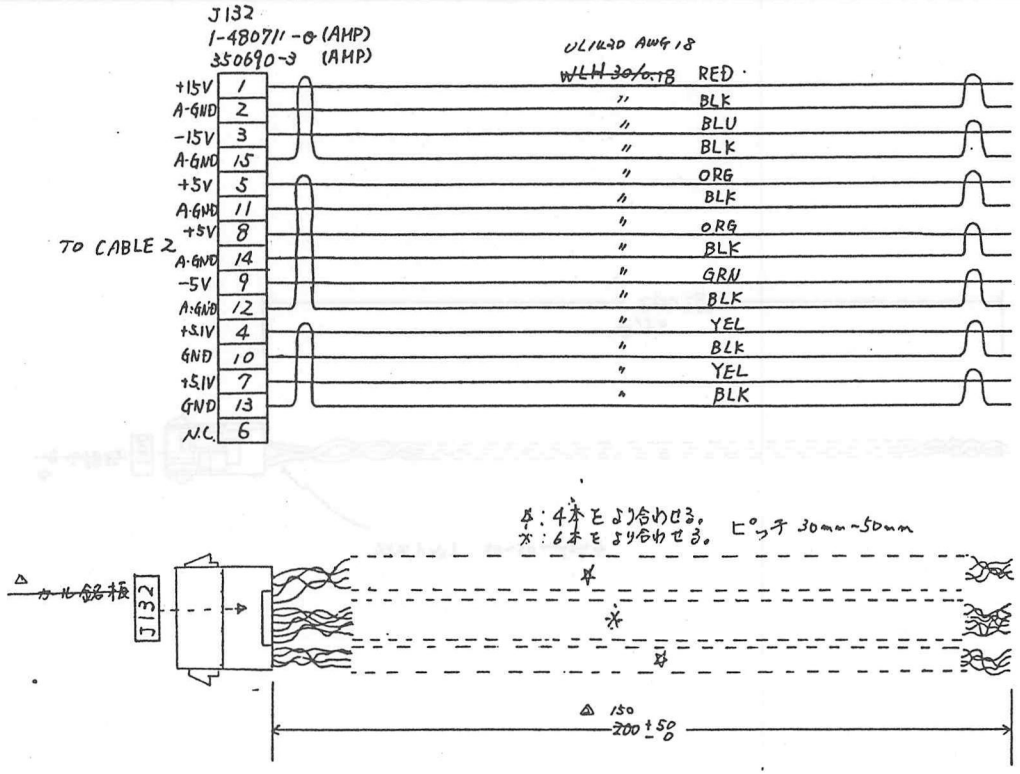


GEU MB EP-3466

REVISIONS変更

| | | | | | |
|---|---|---|---|---|---|
| Aloka | TITLE名称 CABLE 103B | | | | MODEL形名 CO-GEU-50-S-02B |
| 3RD ANGLE PROJECTION 第3角法 | DRAWN製図 Y.Yamada | DESIGNED設計 | CHECKED検図 | APPD承認 | DRAWING NO.図番 MC 314864 |
| SCALE尺度 | | | | | |
| UNITS単位 mm | | | | | |

1/1

L-013-10-82-

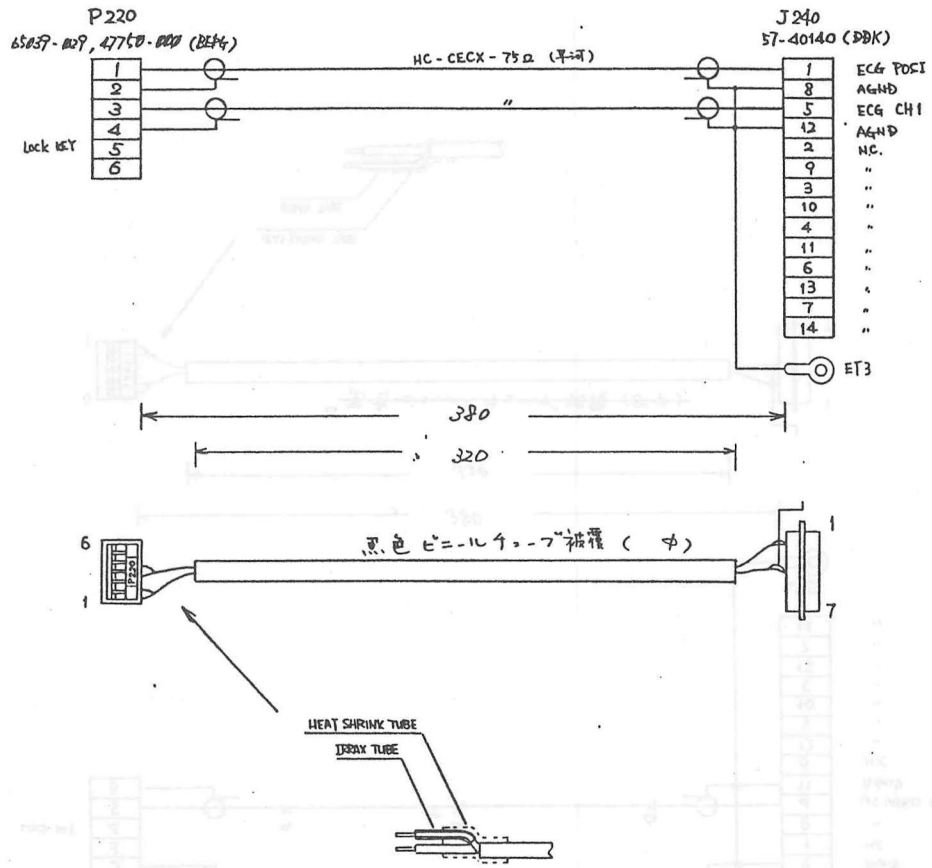


| | | | | | | | |
|---|---|---|---|---|---|---|---|
| REVISIONS変更 | Aloka | TITLE名称 CABLE 200 | | | | MODEL形名 CO-UIM324-A-04 | 1/1 |
| | 3RD ANGLE PROJECTION 第3角法 | DRAWN製図 佐藤 '83.1.11 正和 | DESIGNED設計 佐藤 '83.1.11 正和 | CHECKED検図 依田 '83.1.11 一正 | APPD承認 | DRAWING NO.図番 MC 314388 | |
| | SCALE尺度 | | | | | | |
| | UNITS単位 mm | | | | | | |

L-013-10-82-A3

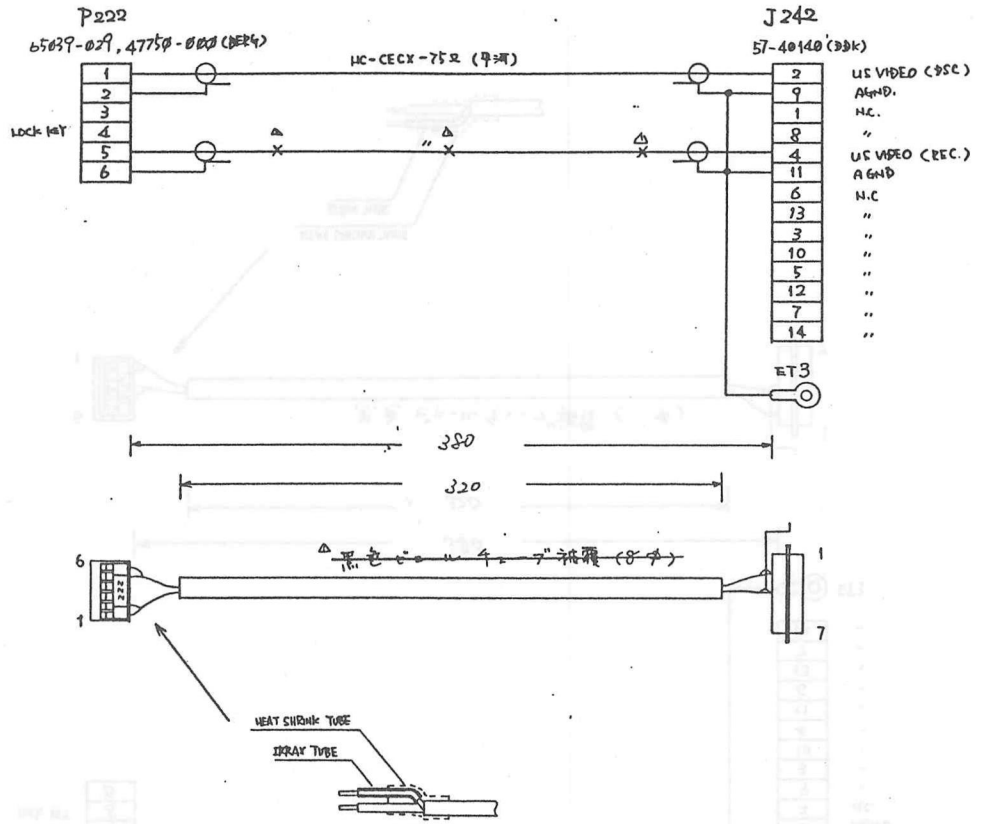


| | | | | | |
|---|---|---|---|---|---|
| Aloka | TITLE 名称: CABLE 202 | | | MODEL 形名: CO-UIM324-C-04 | 1/1 |
| 3RD ANGLE PROJECTION 第3角法 | DRAWN 製図: 佐藤 '83.1.11 正和 | DESIGNED 設計: 佐藤 '83.1.11 正和 | CHECKED 検図: 依田 '83.1.11 正 | APPD 承認 | DRAWING NO. 図番: MC 314390 |
| SCALE 尺度 / UNITS 単位 mm | | | | | |

REVISIONS 変更

L-013-10-82-A3

PIN NO. SIGNAL

ピン番 対応

| P223 P226 | J243 J245 | CBL203 | CBL205 |
|---|---|---|---|
| 1 | 1 | DSC ADS 0/ | VEL 0/ |
| 2 | 26 | GND | GND |
| 3 | 2 | DSC ADS 1/ | VEL 1/ |
| 4 | 27 | GND | GND |
| 5 | 3 | DSC ADS2/ | VEL 2/ |
| 6 | 28 | GND | GND |
| 7 | 4 | DSC ADS3/ | VEL3/ |
| 8 | 29 | GND | GND |
| 9 | 5 | DSC ADS4/ | VEL4/ |
| 10 | 30 | GND | GND |
| 11 | 6 | DSC ADS5/ | VEL5/ |
| 12 | 31 | GND | GND |
| 13 | 7 | DSC ADS6/ | VEL6/ |
| 14 | 32 | GND | GND |
| 15 | 8 | DSC ADS7/ | VEL7/ |
| 16 | 33 | GND | GND |
| 17 | 9 | DSC ADS8/ | VAR 0/ |
| 18 | 34 | GND | GND |
| 19 | 10 | DSC ADS9/ | VAR1/ |
| 20 | 35 | GND | GND |
| 21 | 11 | LINE START/ | VAR2/ |
| 22 | 36 | GND | GND |
| 23 | 12 | FRAME END/ | VAR3/ |
| 24 | 37 | GND | GND |
| 25 | 13 | US BLK/ | VAR4/ |
| 26 | 38 | GND | GND |
| 27 | 14 | DF AREA | VAR5/ |
| 28 | 39 | GND | GND |
| 29 | 15 | VIDEO CODE 0 | VAR6/ |
| 30 | 40 | GND | GND |
| 31 | 16 | VIDEO CODE 1 | VAR7/ |
| 32 | 41 | GND | GND |
| 33 | 17 | N.C. | DTSTB/ |
| 34 | 42 | " | GND |
| 35 | 18 | " | COLOR EN |
| 36 | 43 | " | GND |
| 37 | 19 | ECG FRAME / | FLWCT/ |
| 38 | 44 | GND | GND |
| 39 | 20 | N.C. | B/W EN |
| 40 | 45 | " | GND |
| 41 | 21 | TRACE/ | FLW AREA |
| 42 | 46 | GND | GND |
| 43 | 22 | N.C. | NC |
| 44 | 47 | " | " |
| 45 | 23 | " | " |
| 46 | 48 | " | " |
| 47 | 24 | " | " |
| 48 | 49 | " | " |
| 49 | 25 | " | " |
| 50 | 50 | " | " |

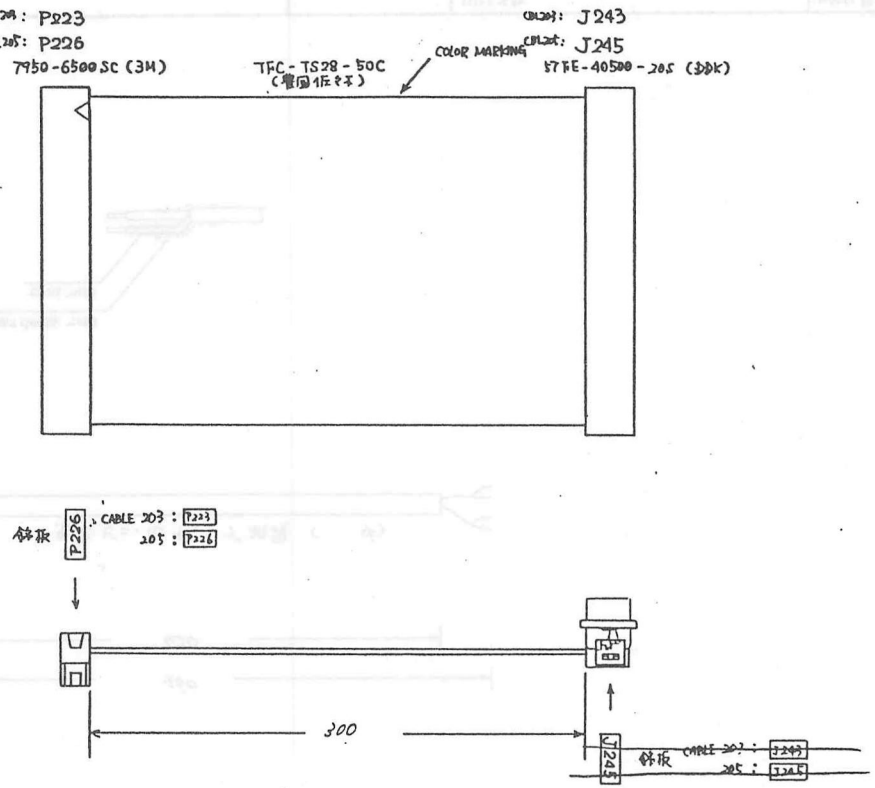


REVISIONS変更

89-12-29
鉄板中止
MW95552
#51—
指1段-M9249

| Aloka | TITLE名称 CABLE 203 205 | MODEL形名 CO-UIM324-D-05 CO-UIM324-F-05 | 1/1 |
|---|---|---|---|
| 3RD ANGLE PROJECTION 第3角法 | DRAWN製図 佐藤 83.1.11 正和 / DESIGNED設計 佐藤 83.1.11 正和 / CHECKED検図 佐藤 83.1.11 正和 / APPD承認 | DRAWING NO.図番 MC 314391 | |
| SCALE尺度 / UNITS単位 mm | | | |

L-013-10-82-A3

P225

05039-0031, 07750-0000(BERG)

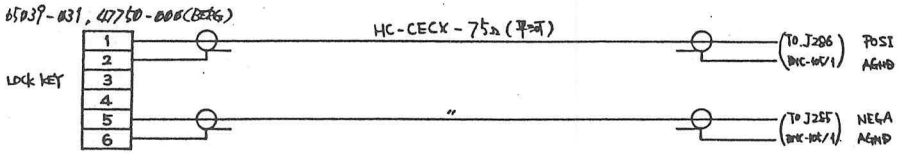


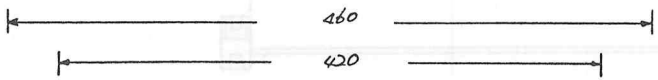


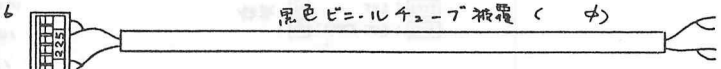


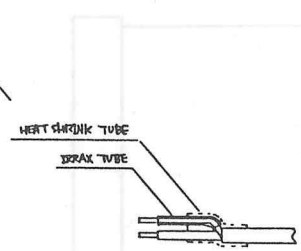


| | | | | | | | |
|---|---|---|---|---|---|---|---|
| REVISIONS変更 | Aloka | TITLE名称 CABLE 204 | | | | MODEL形名 CO-UIM324-E-04 | 1/1 |
| | 3RD ANGLE PROJECTION 第3角法 | DRAWN製図 佐藤 99.1.11 正子 | DESIGNED設計 佐藤 99.1.11 正子 | CHECKED検図 牧田 99.1.11 正 | APPD承認 | DRAWING NO. 図番 MC 314392 | |
| | SCALE 尺度 | | | | | | |
| | UNITS 単位 mm | | | | | | |

L-013-10-82-A3

PIN No.
ピン番対応 SIG.

| P228 | J246 | |
|---|---|---|
| 1 | 1 | COMMON |
| 2 | 6 | TXD+ |
| 3 | 2 | TXD- |
| 4 | 7 | RXD+ |
| 5 | 3 | RXD- |
| 6 | 8 | TXC+ |
| 7 | 4 | TXC- |
| 8 | 9 | RXC+ |
| 9 | 5 | RXC- |
| 10 | N.C. | N.C. |

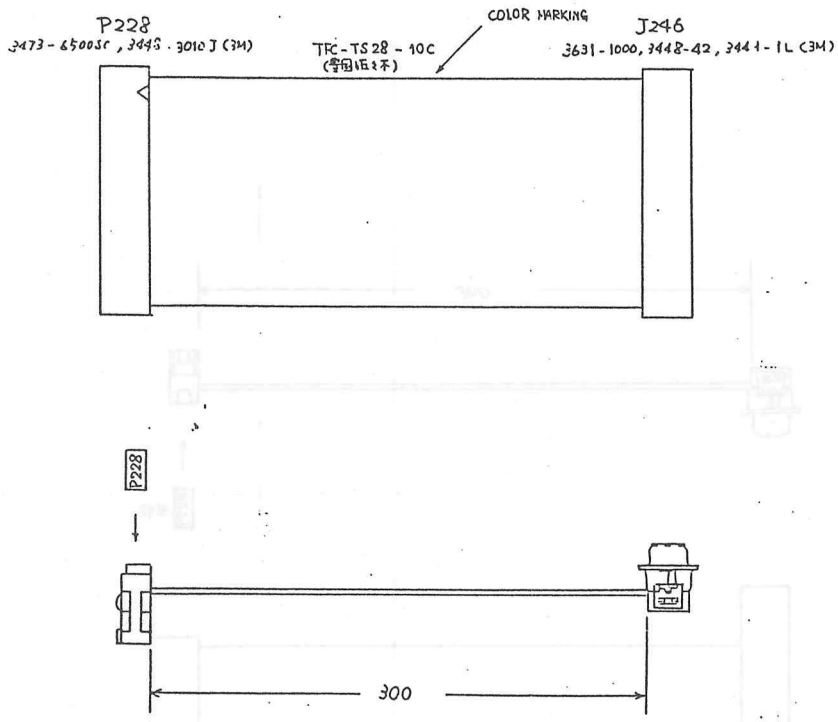


REVISIONS変更

| | | | | | |
|---|---|---|---|---|---|
| Aloka | TITLE名称 CABLE 206 | | | MODEL形名 (CO-UTM324-G-03) L-CABLE-175 | 1/1 |
| 3RD ANGLE PROJECTION 第3角法 | DRAWN製図 | DESIGNED設計 | CHECKED検図 | APPD承認 | DRAWING NO.図番 MC 314394 |
| SCALE尺度 | | | | | |
| UNITS単位 mm | | | | | |

PIN No.

| P229 | J247 | SIG. |
|---|---|---|
| 1 | 1 | N.C. |
| 2 | 14 | 〃 |
| 3 | 2 | RXD232C |
| 4 | 15 | N.C. |
| 5 | 3 | TXD232C |
| 6 | 16 | N.C. |
| 7 | 4 | CXD232C |
| 8 | 17 | N.C. |
| 9 | 5 | RTS232C |
| 10 | 18 | N.C. |
| 11 | 6 | 〃 |
| 12 | 19 | 〃 |
| 13 | 7 | 〃 |
| 14 | 20 | CD232C |
| 15 | 8 | N.C. |
| 16 | 21 | 〃 |
| 17 | 9 | 〃 |
| 18 | 22 | 〃 |
| 19 | 10 | 〃 |
| 20 | 23 | 〃 |
| | 11 | 〃 |
| | 24 | 〃 |
| | 12 | 〃 |
| | 25 | 〃 |
| | 13 | 〃 |

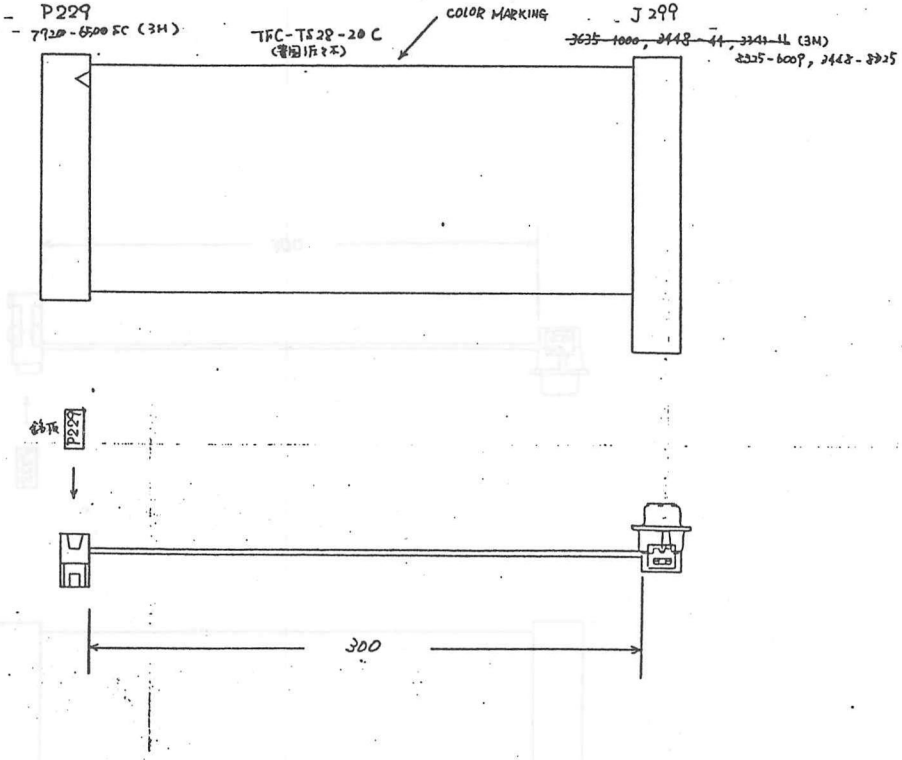


REVISIONS 変更

△ '89.06.21 サトウ
測定中止に計型名変更
MH-2043 #1～

| | | | | | |
|---|---|---|---|---|---|
| Aloka | TITLE 名称 CABLE 207 | | | MODEL 形名 CO-U1M324-H-03 | 1/1 |
| 3RD ANGLE PROJECTION 第3角法 | DRAWN 製図 | DESIGNED 設計 | CHECKED 検図 | APPD 承認 | DRAWING NO. 図番 MC 314395 |
| SCALE 尺度 | | | | | |
| UNITS 単位 mm | | | | | |

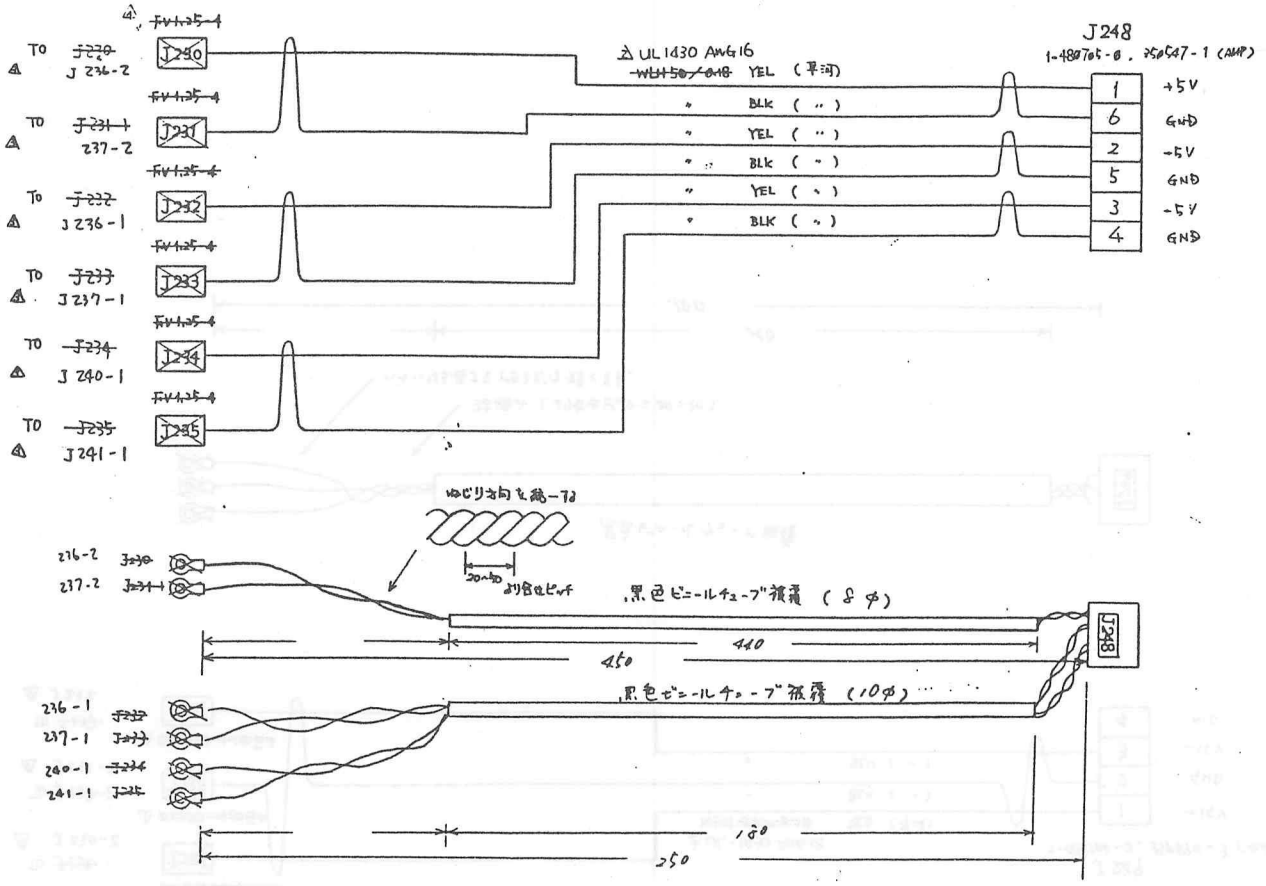


REVISIONS変更

| | | | | | |
|---|---|---|---|---|---|
| Aloka | TITLE名称 CABLE 208 | | | MODEL形名 CO-UIM324-I-04 | 1/1 |
| 3RD ANGLE PROJECTION 第3角法 | DRAWN製図 | DESIGNED設計 | CHECKED検図 | APPD承認 | DRAWING NO.図番 MC 314396 |
| SCALE 尺度 | | | | | 出図 92.12.16 アロカ |
| UNITS 単位 mm | | | | | |

L 013-10-82-A3

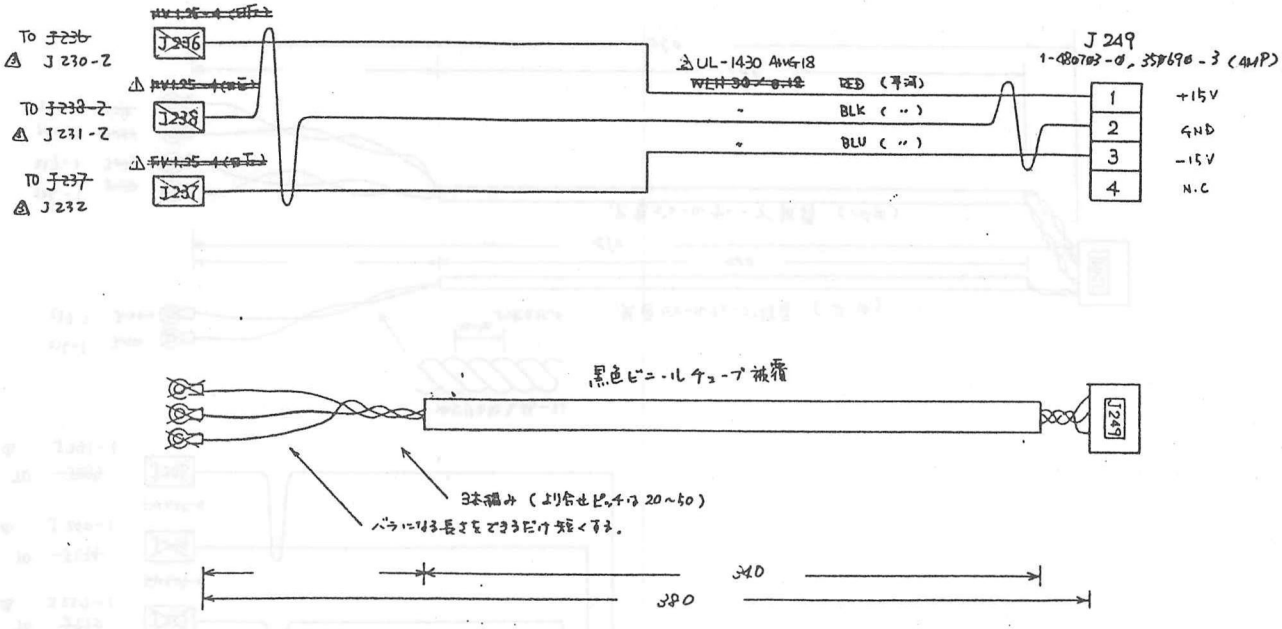


| | | | | | |
|---|---|---|---|---|---|
| Aloka | TITLE 名称: CABLE 209 | | | MODEL 形名: CO-UIM 324-J-04 | 1/1 |
| 3RD ANGLE PROJECTION 第3角法 | DRAWN 製図 | DESIGNED 設計 | CHECKED 検図 | APPD 承認 | DRAWING NO. 図番: MC 314397 |
| SCALE 尺度 | 佐藤 | 佐藤 | 代出 | | 出図 92.12.16 アロカ |
| UNITS 単位 mm | 正和 | 正和 | 正 | | |

REVISIONS 変更
1. 37.12.16 サトウ
仕番端子座止
MW-95552 #1~
△ 90.3.22 工尾
UL 線に変更
MW-96012 #1 (9MM2862)
△ 92.10.27 サトウ
680 EX, STD 対応
680 EX MW-24022 #1~
680 STD MW-24407 #1~
作場 11枝-M2197

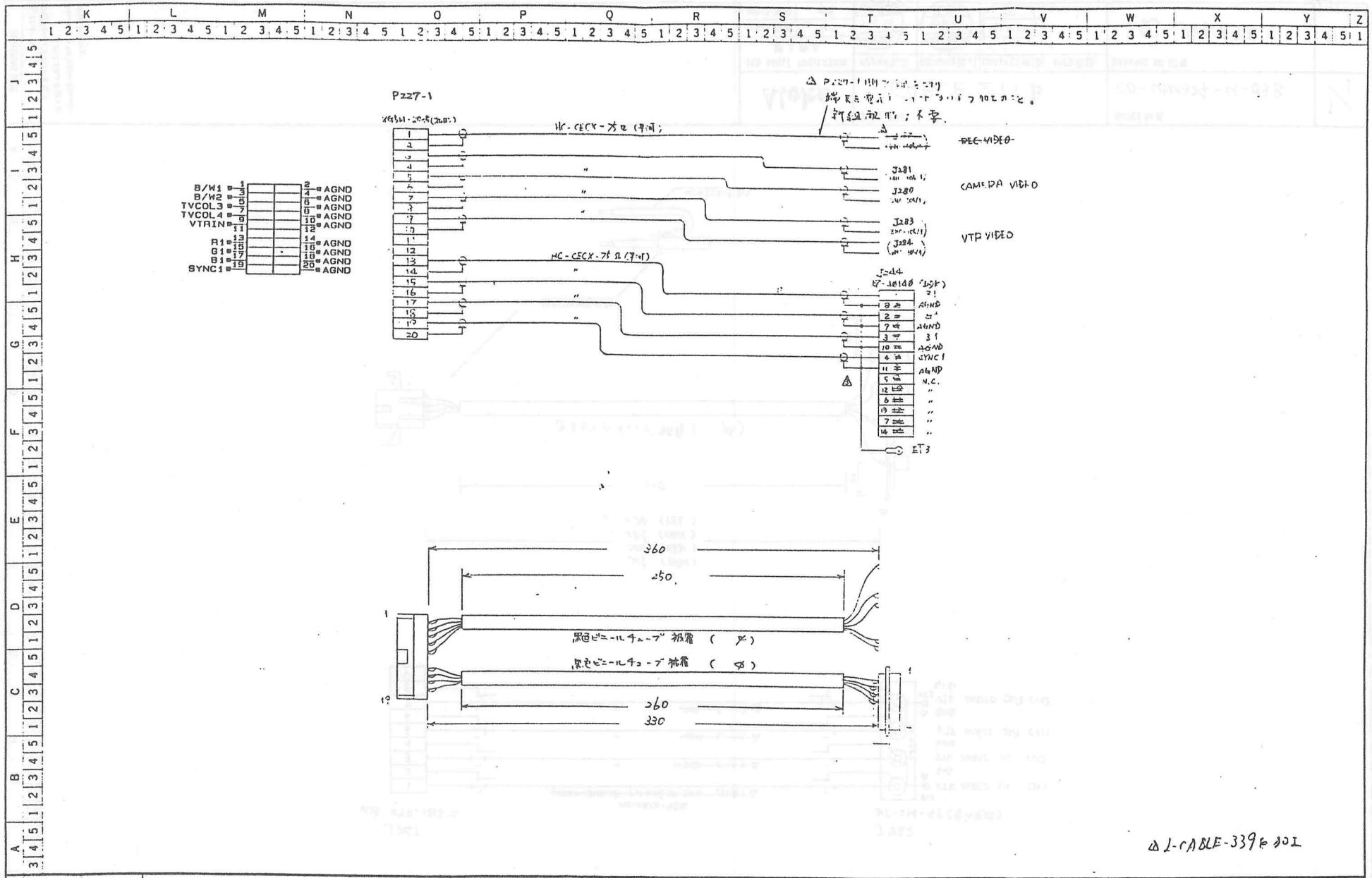


| | | | | | |
|---|---|---|---|---|---|
| Aloka | TITLE 名称: CABLE 210C | | | MODEL 形名: CO-UIM324-L-065 | 1/1 |
| 3RD ANGLE PROJECTION 第3角法 | DRAWN 製図 | DESIGNED 設計 | CHECKED 検図 | APPD 承認 | DRAWING NO. 図番: MC316137 |
| SCALE 尺度 | 佐藤 正和 | 佐藤 89.6.26 正和 | 松田 89.6.28 正和 | | 出図 92.12.16 アロカ |
| UNITS 単位 mm | | | | | |

REVISIONS 変更

L-013-10-82-A3

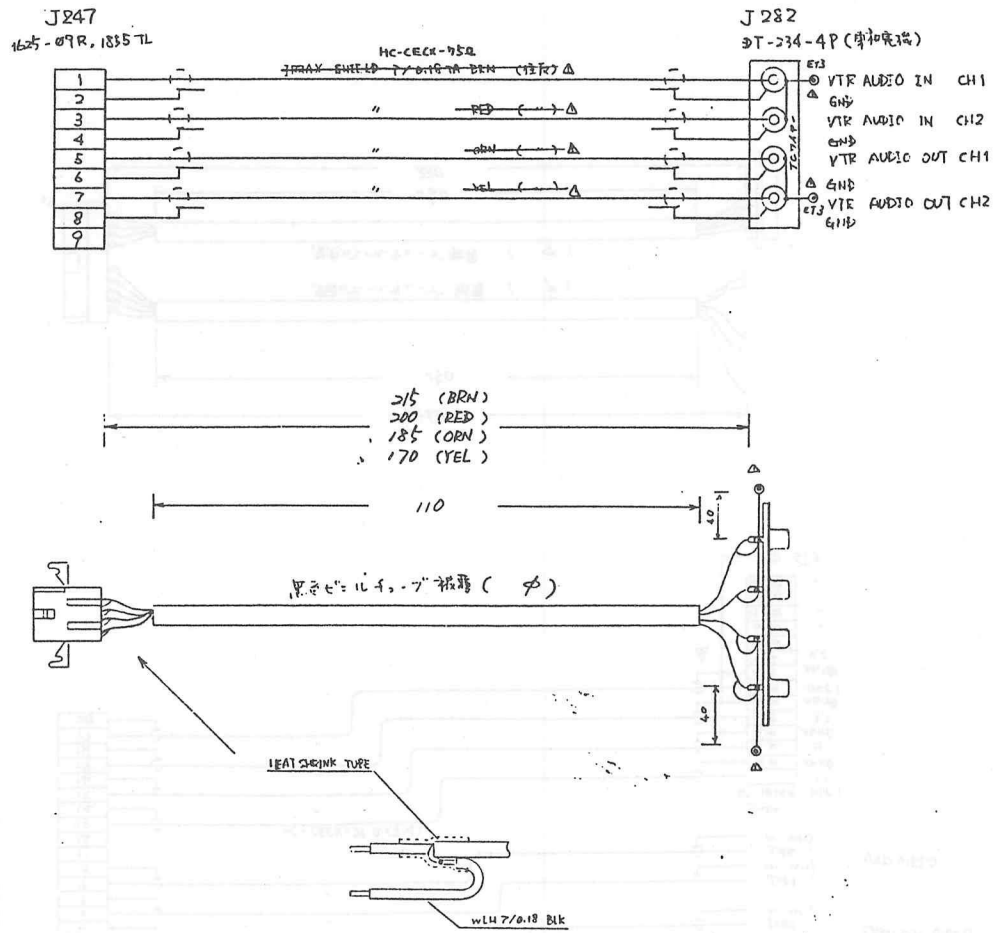


| | | | | | |
|---|---|---|---|---|---|
| Aloka | TITLE 名称: CABLE 211 B | | | MODEL 形名: CO-UIM324-M-03B | 1/1 |
| 3RD ANGLE PROJECTION 第3角法 | DRAWN 製図 | DESIGNED 設計 | CHECKED 検図 | APPD 承認 | DRAWING NO. 図番: MC 316138 |
| SCALE 尺度 | 佐藤 '89.6.26 正和 | 佐藤 '89.6.26 正和 | '89.6.26 正 | | |
| UNITS 単位 mm | | | | | |

REVISIONS 変更

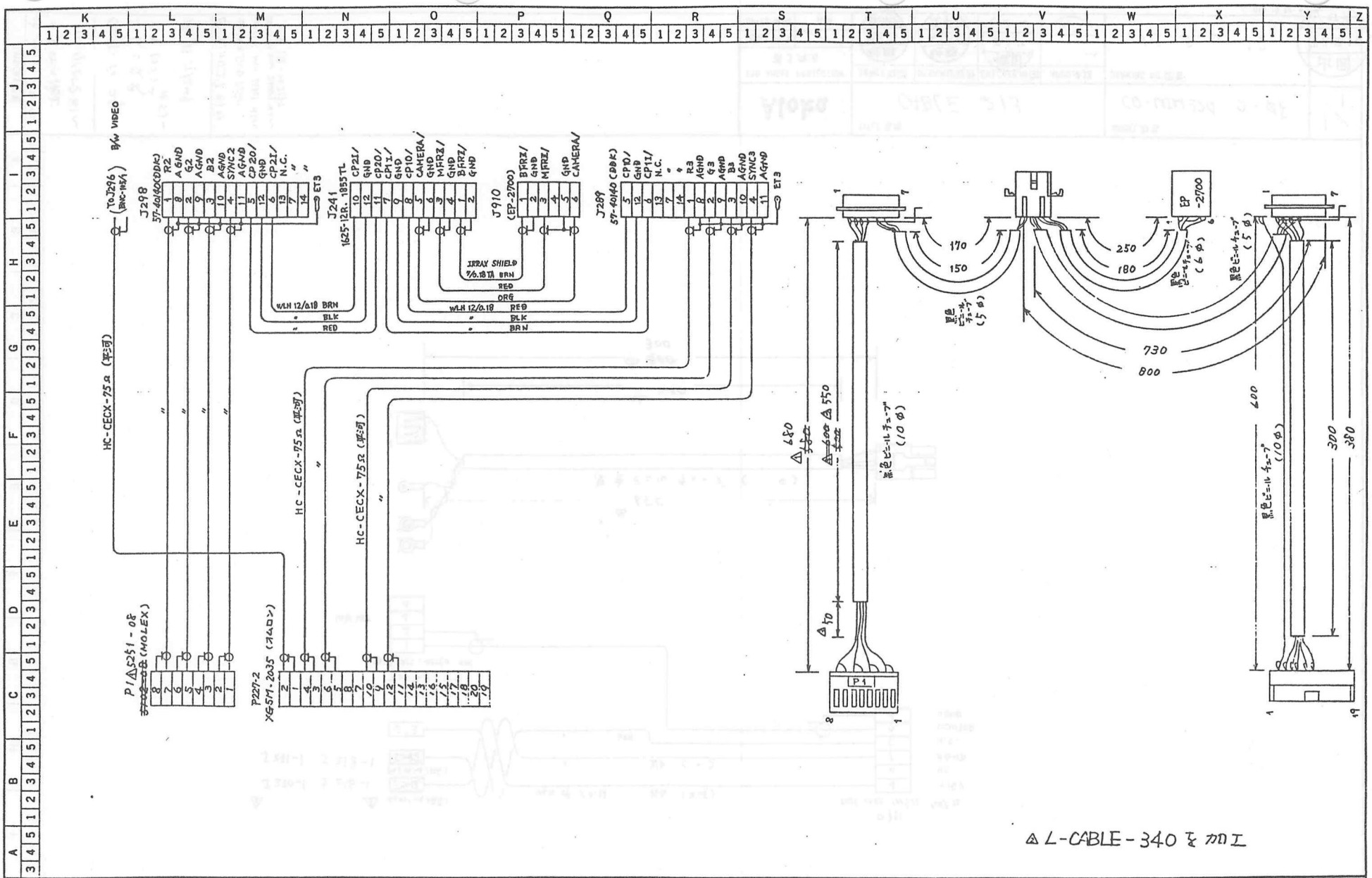


REVISIONS変更

△ 89.11.24 サトウ
ケーブルモノ コネクタ変更
MW-95552 #1～

△ 89.12.12 サトウ
L-CABLE に変更
MW-95552 #1～

△ 91.2.21 サトウ
黒ビニール補強長変更
MW-04580 #51～

| | | | | | | |
|---|---|---|---|---|---|---|
| Aloka | TITLE名称 CABLE 212B | | | | MODEL形名 CO-UIM324-N-04B | 1/1 |
| 3RD ANGLE PROJECTION 第3角法 | DRAWN製図 横山 89-10-13 | DESIGNED設計 佐藤 正和 | CHECKED検図 | APPD承認 | DRAWING NO.図番 MC 317223 | |
| SCALE 尺度 | | | | | | |
| UNITS 単位 mm | | | | | | |

L-013-10-82-A3

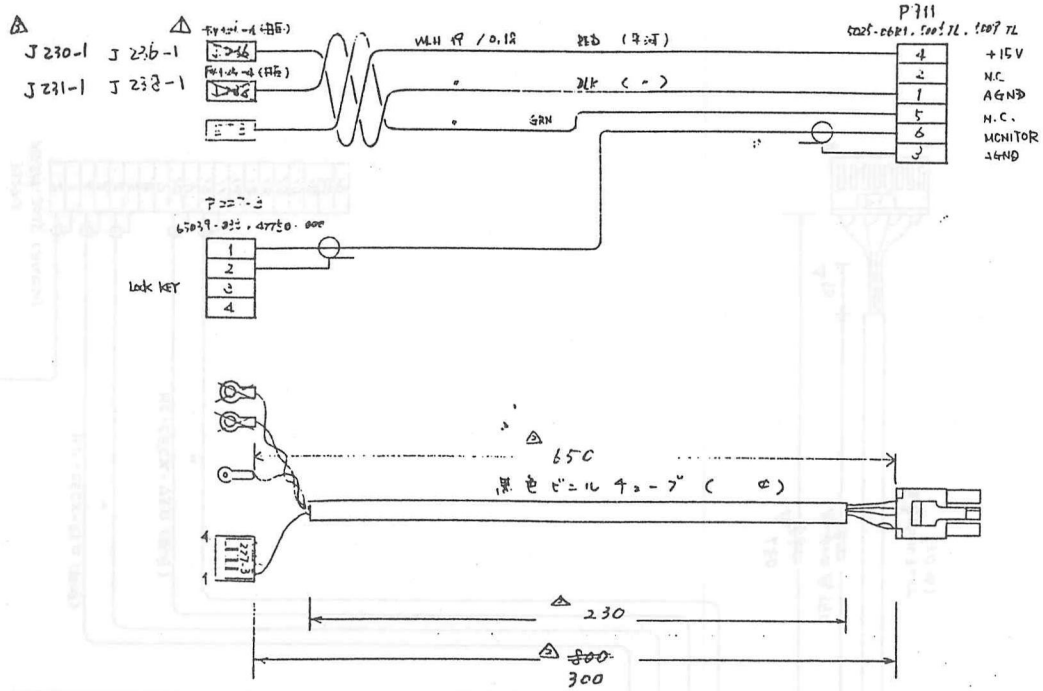


REVISIONS変更

| | | | |
|---|---|---|---|
| Aloka | TITLE名称 CABLE 213 | MODEL形名 CO-UIM324-0-Ø8 | 1/1 |
| 3RD ANGLE PROJECTION 第3角法 | DRAWN製図 佐藤 89.6.26 正和 | DESIGNED設計 佐藤 89.6.26 正和 | CHECKED検図 |
| SCALE 尺度 | | | APPD承認 |
| UNITS 単位 mm | | | |

DRAWING NO.図番 MC 310140

出図 '92.12.16 アロカ

L-013-10-82-A3

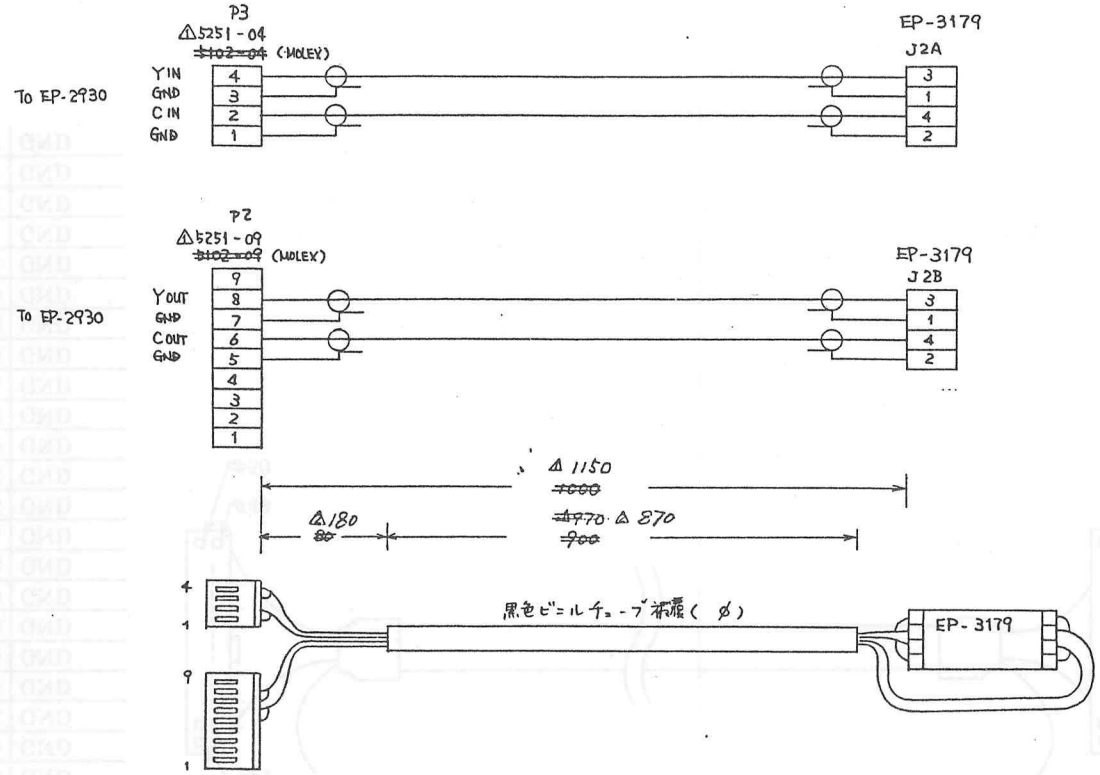


REVISIONS変更
△ 89.11.24 サトウ
ケーブル長及びコネクタ変更
MW-95552 #1～
△ 91.2.21 サトウ
黒ビニル被覆長変更
MW-04580 #51～

| | | | | | |
|---|---|---|---|---|---|
| Aloka | TITLE名称 SSD-680 CABLE 214 | | | | MODEL形名 CO-UIM 324-P-05 |
| 3RD ANGLE PROJECTION 第3角法 | DRAWN製図 佐藤 '89.7.11 正和 | DESIGNED設計 佐藤 '89.7.11 正和 | CHECKED検図 依田 '89.7.11 正 | APPD承認 入江 89-8-1 | DRAWING NO.図番 MC 316141 |
| SCALE 尺度 / UNITS 単位 mm | | | | | |

1/1

L-013-10-82-A3

| to EP-3456 J3 | | | |
|---|---|---|---|
| 1 | | 2 | GND |
| 3 | TRIG 0 | 4 | GND |
| 5 | TRIG 1 | 6 | GND |
| 7 | TRIG 2 | 8 | GND |
| 9 | TRIG 3 | 10 | GND |
| 11 | TRIG 4 | 12 | GND |
| 13 | TRIG 5 | 14 | GND |
| 15 | TRIG 6 | 16 | GND |
| 17 | TRIG 7 | 18 | GND |
| 19 | TRIG 16 | 20 | GND |
| 21 | TRIG 17 | 22 | GND |
| 23 | TRIG 18 | 24 | GND |
| 25 | TRIG 19 | 26 | GND |
| 27 | TRIG 20 | 28 | GND |
| 29 | TRIG 21 | 29 | GND |
| 31 | TRIG 22 | 32 | GND |
| 33 | TRIG 23 | 34 | GND |
| 35 | TRIG 32 | 36 | GND |
| 37 | TRIG 33 | 38 | GND |
| 39 | TRIG 34 | 40 | GND |
| 41 | TRIG 35 | 42 | GND |
| 43 | TRIG 36 | 44 | GND |
| 45 | TRIG 37 | 46 | GND |
| 47 | TRIG 38 | 48 | GND |
| 49 | TRIG 39 | 50 | GND |

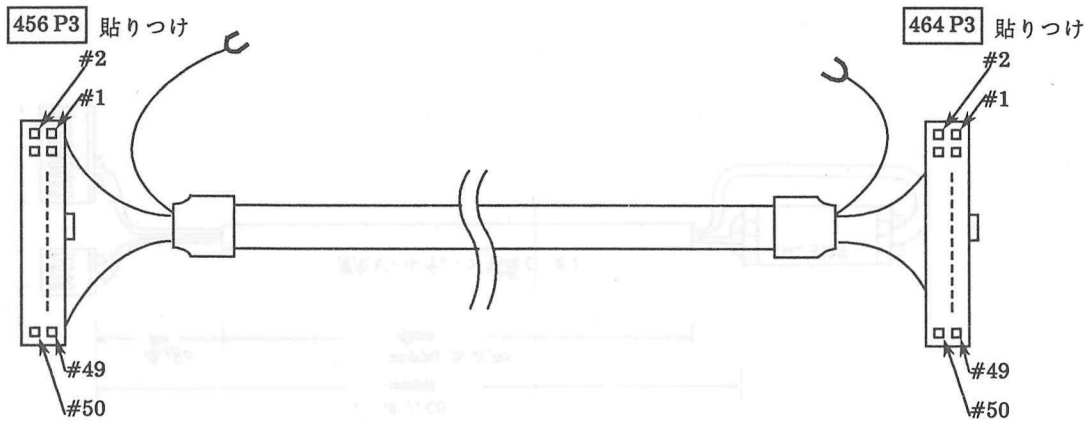


| to EP-3464 J3 | | | |
|---|---|---|---|
| 1 | | 2 | GND |
| 3 | TRIG 0 | 4 | GND |
| 5 | TRIG 1 | 6 | GND |
| 7 | TRIG 2 | 8 | GND |
| 9 | TRIG 3 | 10 | GND |
| 11 | TRIG 4 | 12 | GND |
| 13 | TRIG 5 | 14 | GND |
| 15 | TRIG 6 | 16 | GND |
| 17 | TRIG 7 | 18 | GND |
| 19 | TRIG 16 | 20 | GND |
| 21 | TRIG 17 | 22 | GND |
| 23 | TRIG 18 | 24 | GND |
| 25 | TRIG 19 | 26 | GND |
| 27 | TRIG 20 | 28 | GND |
| 29 | TRIG 21 | 29 | GND |
| 31 | TRIG 22 | 32 | GND |
| 33 | TRIG 23 | 34 | GND |
| 35 | TRIG 32 | 36 | GND |
| 37 | TRIG 33 | 38 | GND |
| 39 | TRIG 34 | 40 | GND |
| 41 | TRIG 35 | 42 | GND |
| 43 | TRIG 36 | 44 | GND |
| 45 | TRIG 37 | 46 | GND |
| 47 | TRIG 38 | 48 | GND |
| 49 | TRIG 39 | 50 | GND |

| Aloka | TITLE 名称 SSD-680EX/STD CABLE 600 | MODEL 形名 L-CABLE-392 | 1/1 |
|---|---|---|---|

| to EP-3457 J3 | | | |
|---|---|---|---|
| 1 | | 2 | GND |
| 3 | TRIG 8 | 4 | GND |
| 5 | TRIG 9 | 6 | GND |
| 7 | TRIG 10 | 8 | GND |
| 9 | TRIG 11 | 10 | GND |
| 11 | TRIG 12 | 12 | GND |
| 13 | TRIG 13 | 14 | GND |
| 15 | TRIG 14 | 16 | GND |
| 17 | TRIG 15 | 18 | GND |
| 19 | TRIG 24 | 20 | GND |
| 21 | TRIG 25 | 22 | GND |
| 23 | TRIG 26 | 24 | GND |
| 25 | TRIG 27 | 26 | GND |
| 27 | TRIG 28 | 28 | GND |
| 29 | TRIG 29 | 29 | GND |
| 31 | TRIG 30 | 32 | GND |
| 33 | TRIG 31 | 34 | GND |
| 35 | TRIG 40 | 36 | GND |
| 37 | TRIG 41 | 38 | GND |
| 39 | TRIG 42 | 40 | GND |
| 41 | TRIG 43 | 42 | GND |
| 43 | TRIG 44 | 44 | GND |
| 45 | TRIG 45 | 46 | GND |
| 47 | TRIG 46 | 48 | GND |
| 49 | TRIG 47 | 50 | GND |

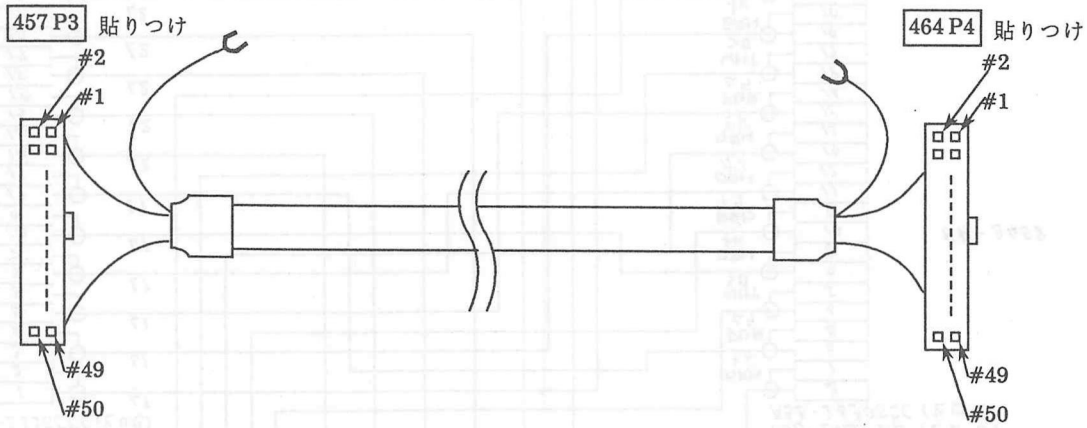


| to EP-3464 J4 | | | |
|---|---|---|---|
| 1 | | 2 | GND |
| 3 | TRIG 8 | 4 | GND |
| 5 | TRIG 9 | 6 | GND |
| 7 | TRIG 10 | 8 | GND |
| 9 | TRIG 11 | 10 | GND |
| 11 | TRIG 12 | 12 | GND |
| 13 | TRIG 13 | 14 | GND |
| 15 | TRIG 14 | 16 | GND |
| 17 | TRIG 15 | 18 | GND |
| 19 | TRIG 24 | 20 | GND |
| 21 | TRIG 25 | 22 | GND |
| 23 | TRIG 26 | 24 | GND |
| 25 | TRIG 27 | 26 | GND |
| 27 | TRIG 28 | 28 | GND |
| 29 | TRIG 29 | 29 | GND |
| 31 | TRIG 30 | 32 | GND |
| 33 | TRIG 31 | 34 | GND |
| 35 | TRIG 40 | 36 | GND |
| 37 | TRIG 41 | 38 | GND |
| 39 | TRIG 42 | 40 | GND |
| 41 | TRIG 43 | 42 | GND |
| 43 | TRIG 44 | 44 | GND |
| 45 | TRIG 45 | 46 | GND |
| 47 | TRIG 46 | 48 | GND |
| 49 | TRIG 47 | 50 | GND |

| Aloka | TITLE 名称 SSD-680EX/STD CABLE 601 | MODEL 形名 L-CABLE-392 | 1/1 |
|---|---|---|---|

A3B-24D-2C (ヒロセ)
A3B-2630SCC (ヒロセ)

UL-AWG1631

| | | | |
|---|---|---|---|
| 2 | L2 | ダイ ORN | 2 |
| 1 | L2 | ミド GRN | 1 |
| 4 | L2 | ムラ PUR | 3 |
| 3 | L2 | シロ WHT | 4 |
| 6 | L2 | チャ BRN | 6 |
| 5 | L2 | アカ RED | 5 |
| 8 | L2 | ダイ ORN | 7 |
| 7 | L2 | ミド GRN | 8 |
| 10 | L1 | ムラ PUR | 10 |
| 9 | L1 | シロ WHT | 9 |
| 12 | L1 | チャ BRN | 11 |
| 11 | L1 | アカ RED | 12 |
| 14 | L1 | ダイ ORN | 14 |
| 13 | L1 | ミド GRN | 13 |
| 16 | L1 | ムラ PUR | 15 |
| 15 | L1 | シロ WHT | 16 |
| 17 | L1 | チャ BRN | 18 |
| 18 | L1 | アカ RED | 17 |
| 19 | L1 | ダイ ORN | 19 |
| 20 | L1 | | 20 |
| 11 | L1 | | 22 |
| 22 | L1 | | 21 |
| 23 | L1 | | 23 |
| 24 | L1 | | 24 |

A3B-24D-2C (ヒロセ)
A3B-2630SCC (ヒロセ)

| | | | |
|---|---|---|---|
| 1 | L1 | GRN ミド | 2 |
| 2 | L1 | PUR ムラ | 1 |
| 3 | L1 | WHT シロ | 3 |
| 4 | L1 | BRN チャ | 4 |
| 5 | L1 | RED アカ | 6 |
| 6 | L1 | ORN ダイ | 5 |
| 7 | L1 | GRN ミド | 7 |
| 8 | L1 | PUR ムラ | 8 |
| 10 | L1 | WHT シロ | 10 |
| 9 | L1 | BRN チャ | 9 |
| 12 | L1 | RED アカ | 11 |
| 11 | L2 | ORN ダイ | 12 |
| 14 | L2 | GRN ミド | 14 |
| 13 | L2 | PUR ムラ | 13 |
| 16 | L2 | WHT シロ | 15 |
| 15 | L2 | BRN チャ | 16 |
| 18 | L2 | RED アカ | 18 |
| 17 | L2 | | 17 |
| 20 | L2 | | 19 |
| 19 | L2 | | 20 |
| 21 | L2 | | 22 |
| 24 | L2 | | 21 |
| 23 | L2 | | 23 |
| | | | 24 |

EP-3455 P6

| J6 | | | |
|---|---|---|---|
| 1 | GND | 2 | REC 0 |
| 3 | GND | 4 | REC 1 |
| 5 | GND | 6 | REC 2 |
| 7 | GND | 8 | REC 3 |
| 9 | GND | 10 | REC 4 |
| 11 | GND | 12 | REC 5 |
| 13 | GND | 14 | REC 6 |
| 15 | GND | 16 | REC 7 |
| 17 | REC 8 | 18 | GND |
| 19 | REC 9 | 20 | GND |
| 21 | REC 10 | 22 | GND |
| 23 | REC 11 | 24 | GND |

EP-3455 P7

| J7 | | | |
|---|---|---|---|
| 1 | REC 12 | 2 | GND |
| 3 | REC 13 | 4 | GND |
| 5 | REC 14 | 6 | GND |
| 7 | REC 15 | 8 | GND |
| 9 | GND | 10 | REC 16 |
| 11 | GND | 12 | REC 17 |
| 13 | GND | 14 | REC 18 |
| 15 | GND | 16 | REC 19 |
| 17 | GND | 18 | REC 20 |
| 19 | GND | 20 | REC 21 |
| 21 | GND | 22 | REC 22 |
| 23 | GND | 24 | REC 23 |

A3B-24D-2C (ヒロセ)
A3B-2630SCC (ヒロセ)

EP-3458 P3

EP-3458 P4

ケーブルは全て
UL-AWG1631
L1 = 500 ± 20, -0
L2 = 430 ± 20, -0
注) ケーブル寸法はくれぐれもまちがわない事。

PIN番号は下記による。

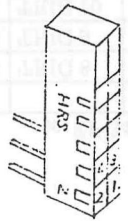

| | | | |
|---|---|---|---|
| REVISIONS: 変更 | | | |
| Aloka | TITLE: 名称 CBL602 | MODEL: 形名 CB-GEU64-A05 | 1/2 |
| 3RD ANGLE PROJECTION 第3角法 | DRAWN 制図 上工機 92.9.25 西谷 | DESIGNED 設計 上工機 92.9.25 西谷 | CHECKED 検図 92.12-5 | SEC.CHIEF 課長 92.10.05 | DRAWING NO. 図番 MC326068 |
| SCALE 尺度 | | | | | |
| UNITS 単位 | | | | | |

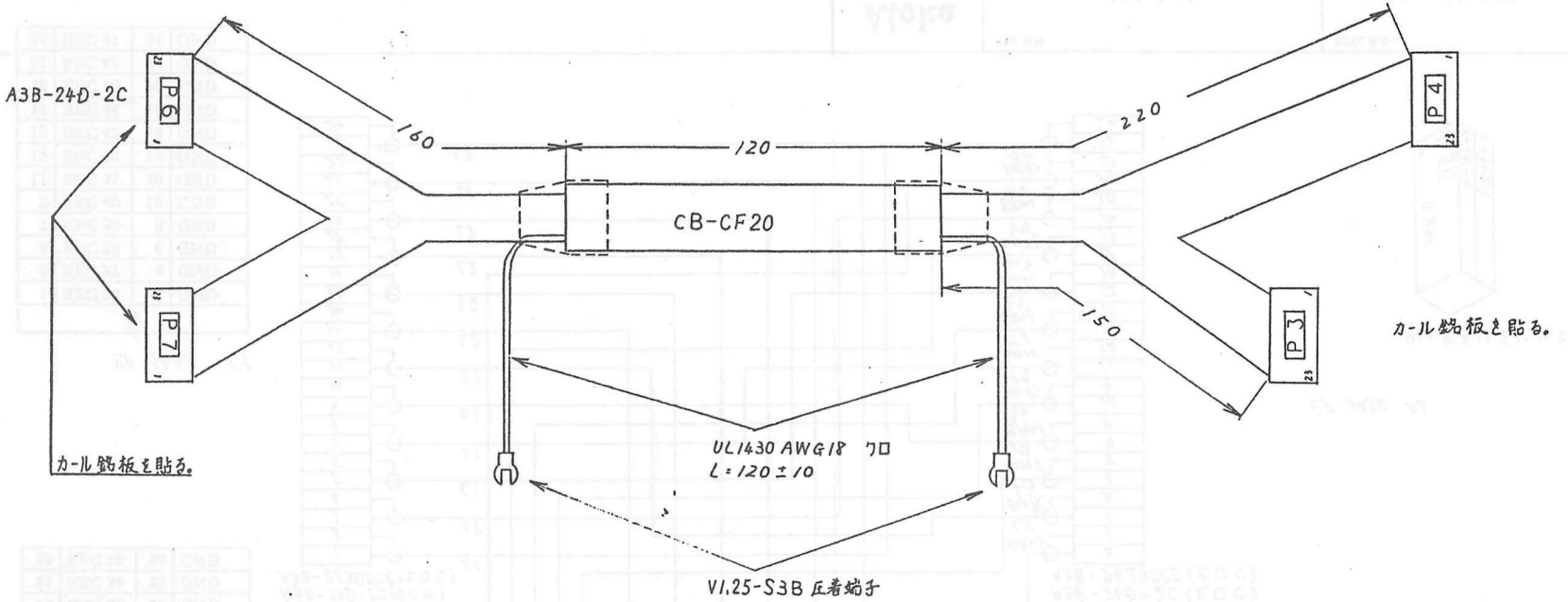


1) アース線は CB-CF20 の導電布に半田付けをする。
2) CB-CF20 の端末処理は 18φヒシチューブを使用 (約 30 mm X 2)
3) 上記寸法はくれぐれも守る事.
4) P3, P4, P6, P7 カール銘板は コネクタのピン番表示 1 and 23 側に貼る。

| | | | | | | |
|---|---|---|---|---|---|---|
| REVISIONS変更 | Aloka | TITLE名称 CBL602 | | | MODEL形名 CO-GEU64-A05 | 2/2 |
| | 3RD ANGLE PROJECTION 第3角法 | DRAWN製図 | DESIGNED設計 | CHECKED検図 | APPD.承認 | DRAWING NO.図番 MC 326069 . |
| | SCALE尺度 | 82.8.25 西谷 | 82.8.25 西谷 | 82.12.5 | 82.12.05 | |
| | UNITS単位 mm | | | | | |

L-013-10-82-A3

A3B-24D-2C (ヒロセ)
A3B-2630SCC (ヒロセ)

UL-AWG1631

| | | | |
|---|---|---|---|
| 1 | L2 | ORN ダイ | 2 |
| 2 | L2 | GRN ミド | 1 |
| 3 | L2 | PuR ムラ | 3 |
| 4 | L2 | WHT シロ | 4 |
| 5 | L2 | BRN チャ | 6 |
| 6 | L2 | RED アカ | 5 |
| 7 | L2 | ORN ダイ | 7 |
| 8 | L1 | GRN ミド | 8 |
| 9 | L1 | PuR ムラ | 10 |
| 10 | L1 | WHT シロ | 9 |
| 11 | L1 | BRN チャ | 11 |
| 12 | L1 | RED アカ | 12 |
| 13 | L1 | ORN ダイ | 14 |
| 14 | L1 | GRN ミド | 13 |
| 15 | L1 | PuR ムラ | 15 |
| 16 | L1 | WHT シロ | 16 |
| 17 | L1 | BRN チャ | 18 |
| 18 | L1 | RED アカ | 17 |
| 19 | L1 | ORN ダイ | 19 |
| 20 | L1 | GRN ミド | 20 |
| 21 | L1 | PuR ムラ | 22 |
| 22 | L1 | WHT シロ | 21 |
| 23 | L1 | BRN チャ | 23 |
| 24 | L1 | RED アカ | 24 |

A3B-24D-2C (ヒロセ)
A3B-2630SCC (ヒロセ)

| | | | |
|---|---|---|---|
| 1 | L1 | GRN ミド | 2 |
| 2 | L1 | PuR ムラ | 1 |
| 3 | L1 | WHT シロ | 3 |
| 4 | L1 | BRN チャ | 4 |
| 5 | L1 | RED アカ | 6 |
| 6 | L1 | ORN ダイ | 5 |
| 7 | L1 | GRN ミド | 7 |
| 8 | L1 | PuR ムラ | 8 |
| 9 | L1 | WHT シロ | 10 |
| 10 | L1 | BRN チャ | 9 |
| 11 | L2 | RED アカ | 11 |
| 12 | L2 | ORN ダイ | 12 |
| 13 | L2 | GRN ミド | 14 |
| 14 | L2 | PuR ムラ | 13 |
| 15 | L2 | WHT シロ | 15 |
| 16 | L2 | BRN チャ | 16 |
| 17 | L2 | RED アカ | 18 |
| 18 | L2 | ORN ダイ | 17 |
| 19 | L2 | GRN ミド | 19 |
| 20 | L2 | PuR ムラ | 20 |
| 21 | L2 | WHT シロ | 22 |
| 22 | L2 | BRN チャ | 21 |
| 23 | L2 | RED アカ | 23 |
| 24 | L2 | ORN ダイ | 24 |

EP-3455 P8

| J8 | | | |
|---|---|---|---|
| 1 | REC 24 | 2 | GND |
| 3 | REC 25 | 4 | GND |
| 5 | REC 26 | 6 | GND |
| 7 | REC 27 | 8 | GND |
| 9 | REC 28 | 10 | GND |
| 11 | REC 29 | 12 | GND |
| 13 | REC 30 | 14 | GND |
| 15 | REC 31 | 16 | GND |
| 17 | REC 32 | 18 | GND |
| 19 | REC 33 | 20 | GND |
| 21 | REC 34 | 22 | GND |
| 23 | REC 35 | 24 | GND |

EP-3455 P9

| J9 | | | |
|---|---|---|---|
| 1 | REC 36 | 2 | GND |
| 3 | REC 37 | 4 | GND |
| 5 | REC 38 | 6 | GND |
| 7 | REC 39 | 8 | GND |
| 9 | REC 40 | 10 | GND |
| 11 | REC 41 | 12 | GND |
| 13 | REC 42 | 14 | GND |
| 15 | REC 43 | 16 | GND |
| 17 | REC 44 | 18 | GND |
| 19 | REC 45 | 20 | GND |
| 21 | REC 46 | 22 | GND |
| 23 | REC 47 | 24 | GND |

EP-3456 P5

EP-3456 P6

ケーブルは全て
UL-AWG1631
L1 = 500 +20, -0
L2 = 430 +20, -0

Pin番号は下記による。

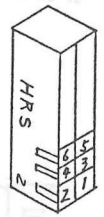


| | | | |
|---|---|---|---|
| Aloka | TITLE: 名称 CBL 603 | MODEL: 形名 CB-GEV64-B05 | 1/2 |
| 3RD ANGLE PROJECTION 第3角法 | DRAWN-製図 92.9.25 西谷 | DESIGNED-設計 92.9.25 西谷 | CHECKED-検図 92.10.-5 近藤 |
| SCALE 尺度 | SEC.CHIEF 課長 92.10.05 入江 | DRAWING NO. 図番 MC326070 | |
| UNITS 単位 | | | |

REVISIONS: 変更

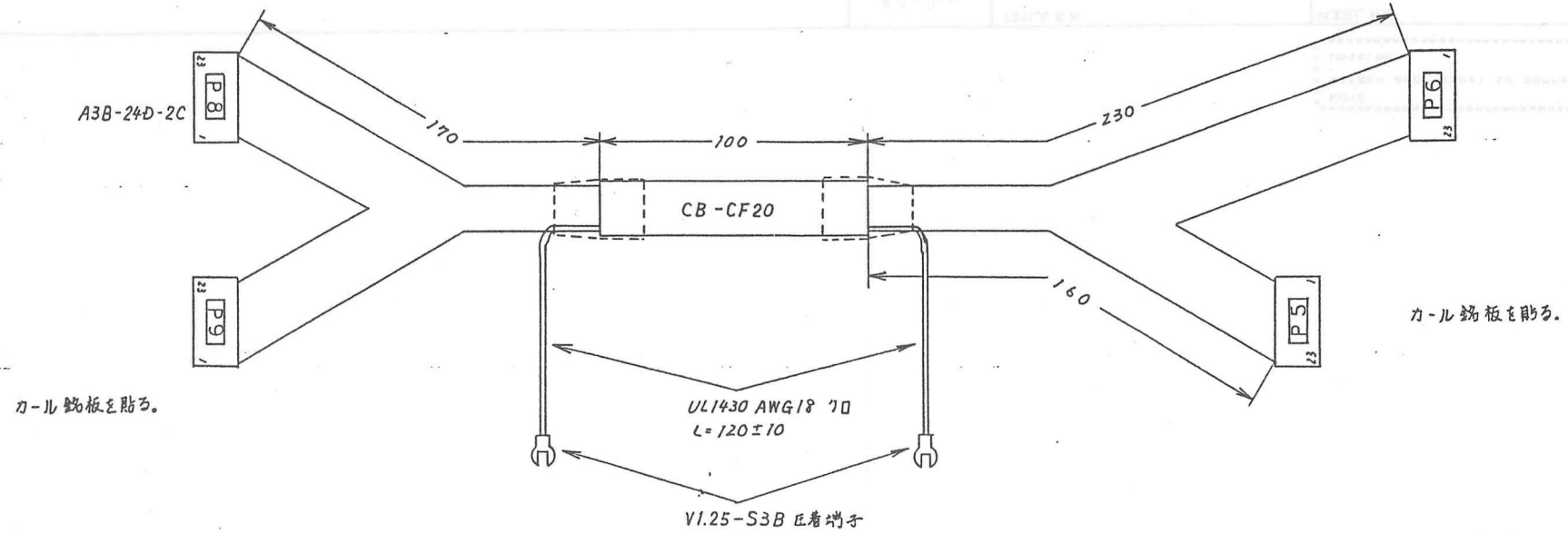


1) アース線はCB-CF20の導電布に半田付けする。
2) CB-CF20 端末処理は18φヒシチューブを使用 (約30mm)
3) 上記寸法はくれぐれも守る事.
4) P5, P6, P8, P9 カール銘板は コネクタのピン番表示 1 and 23 側に貼る。

| | | | | | | |
|---|---|---|---|---|---|---|
| Aloka | TITLE名称 CBL 603 | | | | MODEL形名 CO-GEU64-B05 | 2/2 |
| 3RD ANGLE PROJECTION 第3角法 | DRAWN製図 | DESIGNED設計 | CHECKED検図 | APPD承認 | DRAWING NO.図番 MC326071 | |
| SCALE尺度 | | | | | | |
| UNITS単位 mm | | | | | | |

REVISIONS変更

L-013-10-82-A3

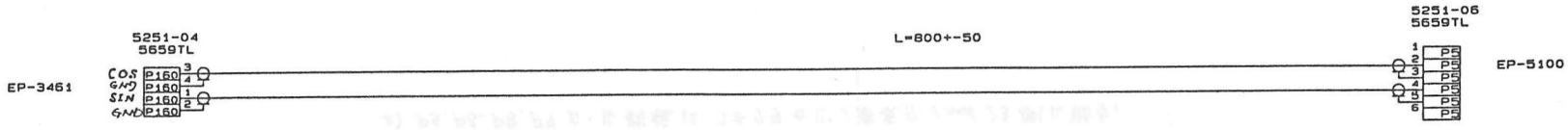


WIRE MATERIAL: PIN1 HC-HEHX75
PIN2 UL1430AWG24 BLK
CAUTION: MAKES SHORTLY LENGTH FOR UL1430

NOTE
Attach each label to connectors.
Unit: mm

| | | | | | |
|---|---|---|---|---|---|
| Aloka | TITLE 名称 CBL607 | | | MODEL 形名 CO-GEU64-F05 | 1/1 |
| 3RD ANGLE PROJECTION 第3角法 | DRAWN 製図 | DESIGNED 設計 | CHECKED 検図 | APPD 承認 | DRAWING NO. 図番 MC325886 |
| SCALE 尺度 / | '92.8.7 | '92.8.7 | '92.8.26 | 92-8-26 | |
| UNIT 単位 mm | | | | | |

REVISIONS 変更

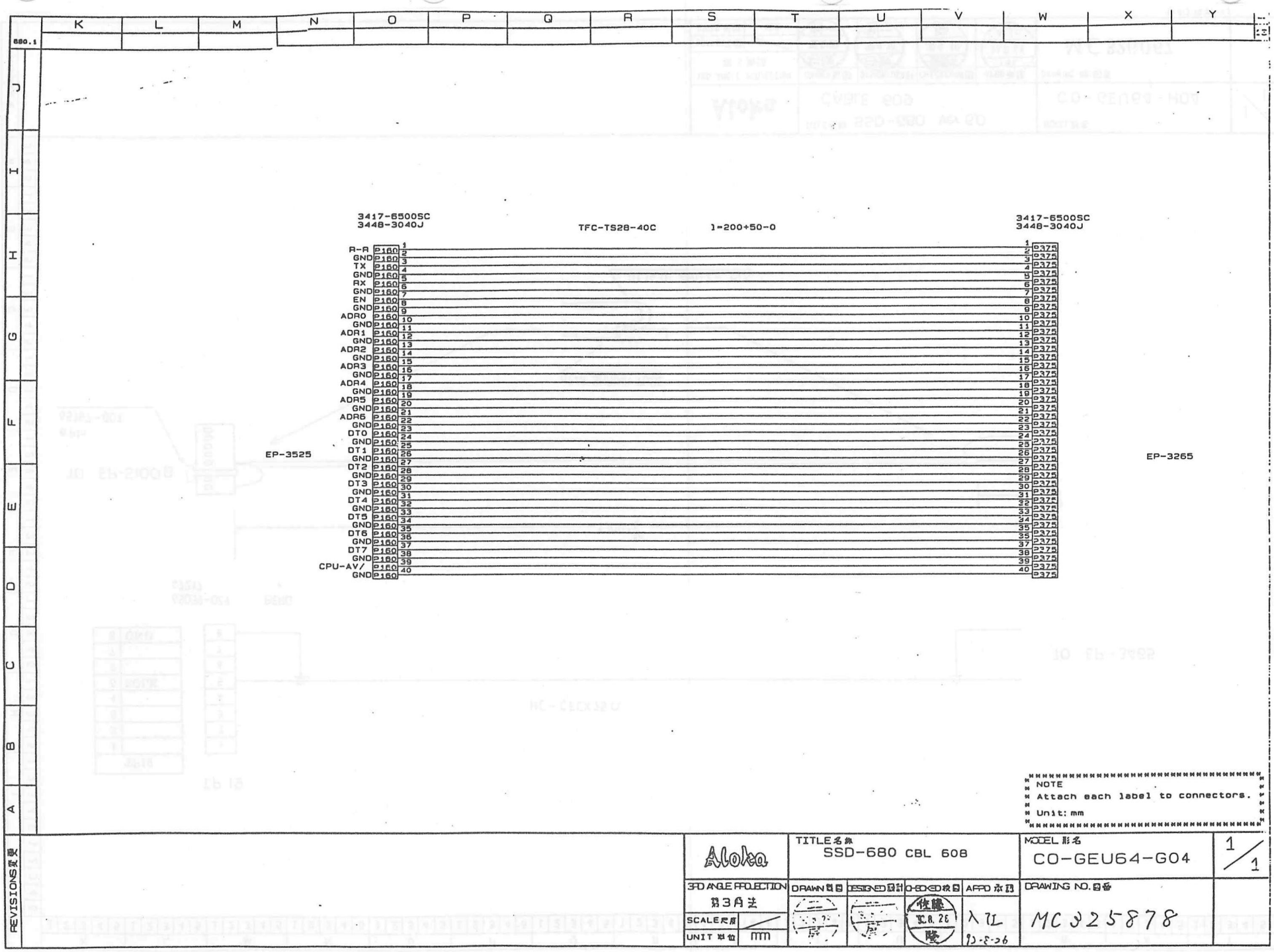
3417-6500SC
3448-3040J
TFC-TS28-40C
l=200+50-0
3417-6500SC
3448-3040J
EP-3525
EP-3265
R-R
GND
TX
GND
RX
GND
EN
GND
ADR0
GND
ADR1
GND
ADR2
GND
ADR3
GND
ADR4
GND
ADR5
GND
ADR6
GND
DT0
GND
DT1
GND
DT2
GND
DT3
GND
DT4
GND
DT5
GND
DT6
GND
DT7
GND
CPU-AV/
GND
P160
P375
NOTE
Attach each label to connectors.
Unit: mm
Aloka
TITLE名称
SSD-680 CBL 608
MODEL 形名
CO-GEU64-G04
1/1
3RD ANGLE PROJECTION
第3角法
SCALE尺度
UNIT 単位
mm
DRAWN 製図
DESIGNED 設計
CHECKED 検図
APPD 承認
DRAWING NO. 図番
MC325878
REVISIONS改版

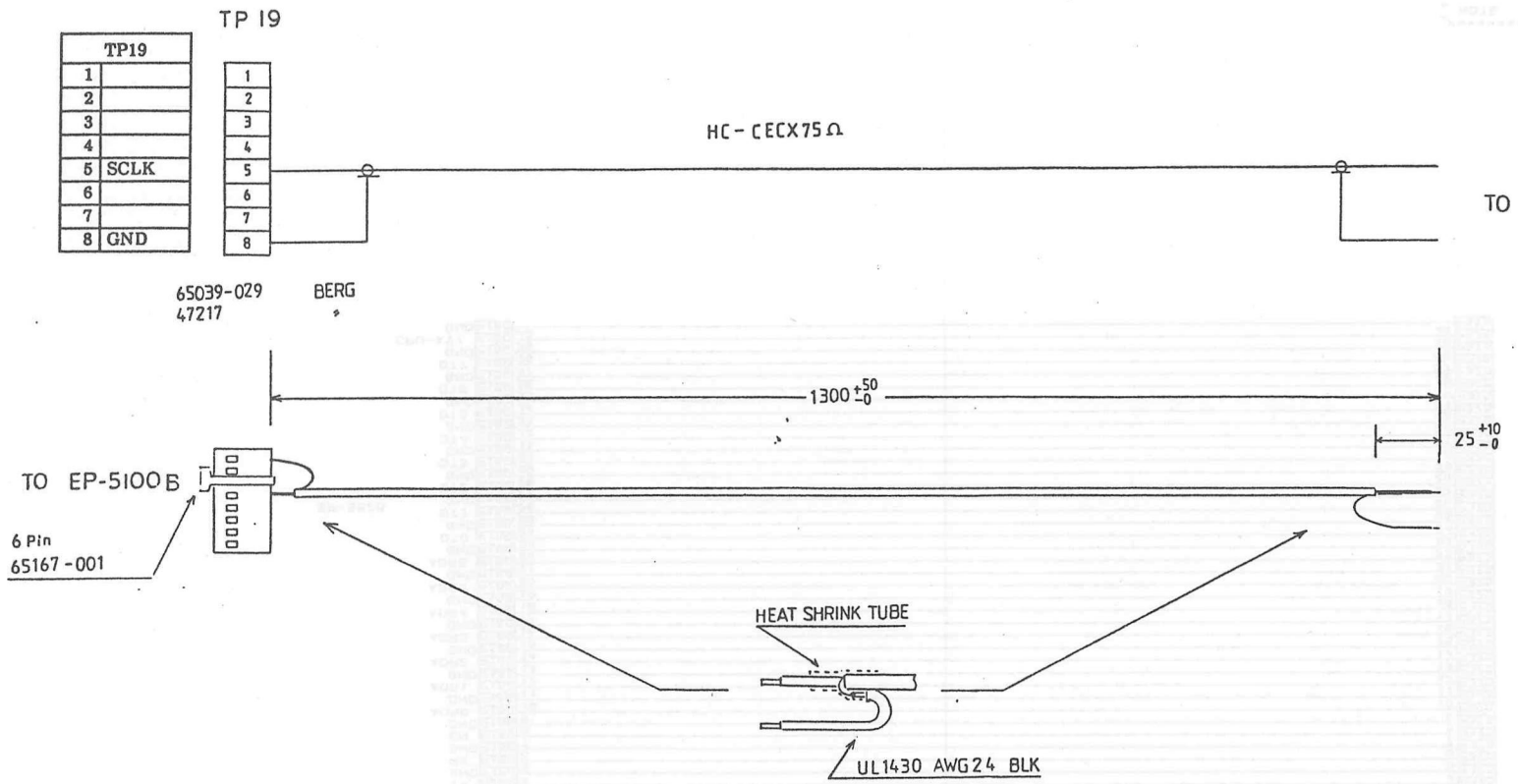


| | | | | | | | |
|---|---|---|---|---|---|---|---|
| REVISIONS変更 | Aloka | TITLE名称 SSD-680 Ver 6.0 CABLE 609 | | | | MODEL形名 CO-GEU64-H04 | 1/1 |
| | 3RD ANGLE PROJECTION 第3角法 | DRAWN製図 石坂 92.9.29 利一 | DESIGNED設計 石坂 92.9.30 利一 | CHECKED検図 92.9.30 | APPD承認 92.10.05 入江 | DRAWING NO.図番 MC326067 | |
| | SCALE尺度 / UNITS単位 mm | | | | | | |

L-013-10-82-A3

| | K | L | M | N | O | P | Q | R | S | T | U | V | W | X | Y | Z |
|---|---|---|---|---|---|---|---|---|---|---|---|---|---|---|---|---|

3425-6500SC
3448-3050J

TFC-TS28-50C

3425-6500SC
3448-3050J

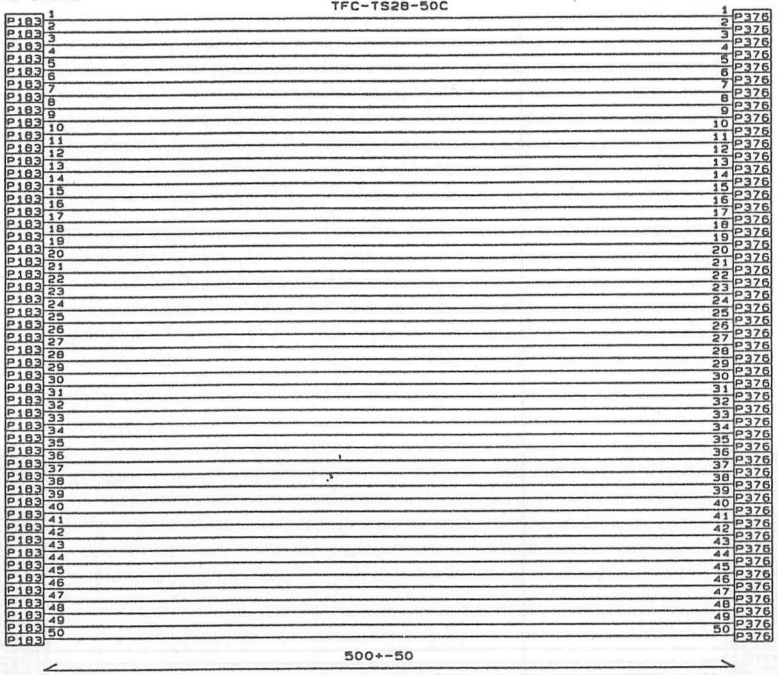


J183

| | | | |
|---|---|---|---|
| +5VA | 1 | 2 | +5VA |
| A1 GND | 3 | 4 | PRB1/2 |
| PCD101 | 5 | 6 | PCD102 |
| PCD103 | 7 | 8 | PCD104 |
| PCD105 | 9 | 10 | PCD106 |
| PCD107 | 11 | 12 | PCD108 |
| PCD201 | 13 | 14 | PCD202 |
| PCD203 | 15 | 16 | PCD204 |
| PCD205 | 17 | 18 | PCD206 |
| PCD207 | 19 | 20 | PCD208 |
| PC301 | 21 | 22 | PCD302 |
| PC303 | 23 | 24 | B1/2 |
| PCD306 | 25 | 26 | C |
| LON/OFF | 27 | 28 | A1 GND |
| A1 GND | 29 | 30 | A1 GND |
| PCD301 | 31 | 32 | PCD302 |
| PCD303 | 33 | 34 | PCD304 |
| PCD305 | 35 | 36 | PCD401 |
| PCD402 | 37 | 38 | PCD403 |
| PCD404 | 39 | 40 | PCD405 |
| PCD406 | 41 | 42 | PCD407 |
| PCD408 | 43 | 44 | PS 1 |
| PS 2 | 45 | 46 | PRB3/4 |
| PCD307 | 47 | 48 | PCD308 |
| +5VA | 49 | 50 | A1 GND |

ep-3466

ep-3265

NOTE
Attach each label to connectors.
Unit: mm

| | | | | | |
|---|---|---|---|---|---|
| REVISIONS 変更 | Aloka | TITLE 名称 CBL 610 (PCD) | | MODEL 形名 CO-GEU64-J05 | 1/1 |
| | 3RD ANGLE PROJECTION 第3角法 | DRAWN 製図 | DESIGNED 設計 | CHECKED 検図 | APPD 承認 | DRAWING NO. 図番 |
| | SCALE 尺度 / UNIT 単位 mm | 92.8.26 | 92.8.26 | | 92-8-26 | MC325879 |

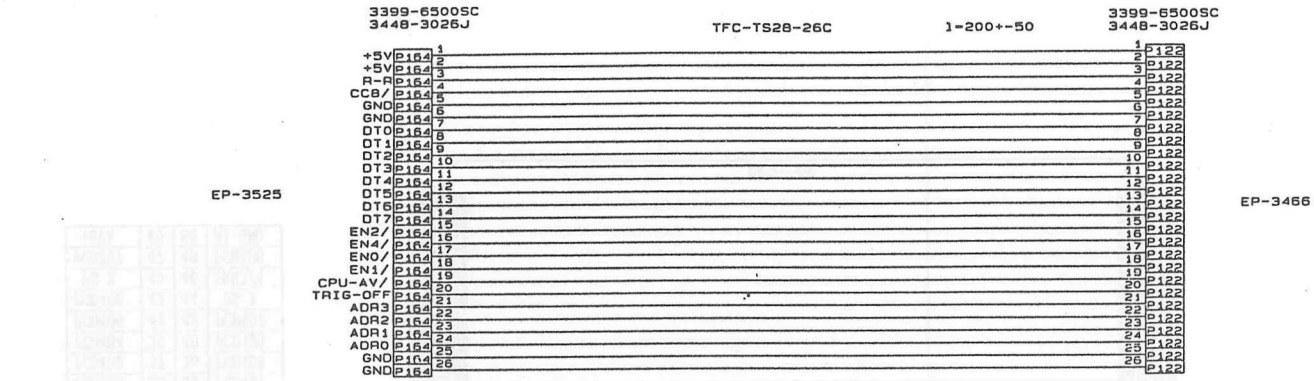


NOTE
Attach each label to connectors.
Unit: mm

| | | | | | |
|---|---|---|---|---|---|
| Aloka | TITLE 名称: CBL 611 | | | MODEL 形名: CO-GEU64-K04 | 1/1 |
| 3RD ANGLE PROJECTION 第3角法 | DRAWN 製図 | DESIGNED 設計 | CHECKED 検図 | APPD 承認 | DRAWING NO. 図番: MC325880 |
| SCALE 尺度 / UNIT 単位 mm | | | | λ IL 92-8-26 | |

REVISIONS 変更

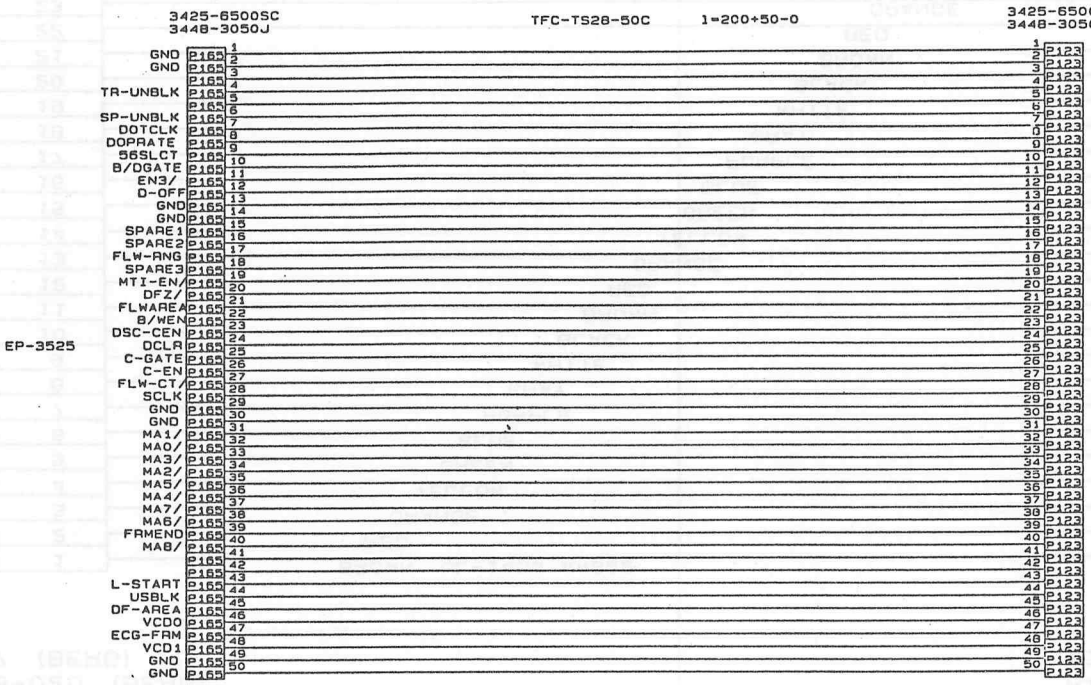


(CBL608: MPU)

NOTE
Attach each label to connectors.
Unit: mm

| | | | | | |
|---|---|---|---|---|---|
| Aloka | TITLE 名称 SSD-680 CBL 612 | | | MODEL 形名 CO-GEU64-L04 | 1/1 |
| 3RD ANGLE PROJECTION 第3角法 | DRAWN 製図 | DESIGNED 設計 | CHECKED 検図 | APPD 承認 | DRAWING NO. 図番 |
| SCALE 尺度 | | | 92.8.26 | 入 72 | MC325881 |
| UNIT 単位 mm | | | 隆 | 92-8-26 | |

REVISIONS 変更

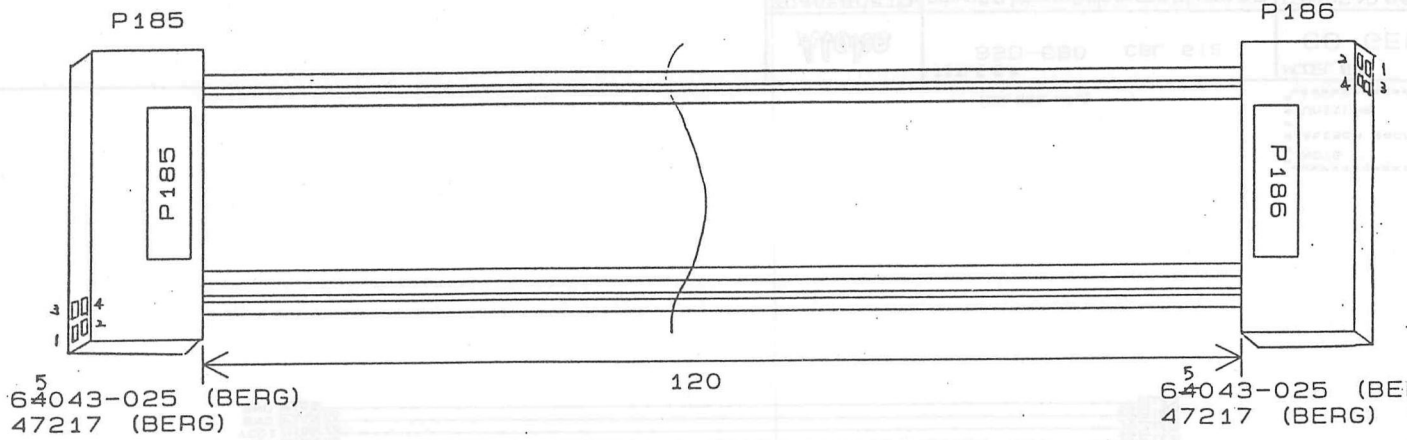


| | | | | |
|---|---|---|---|---|
| A GND | 1 | BROWN UL-1430 AWG22 | 1 | A GND |
| A GND | 2 | RED | 2 | A GND |
| REC46 | 3 | ORANGE | 3 | REC'46 |
| REC47 | 4 | YELLOW | 4 | REC'47 |
| REC44 | 5 | GREEN | 5 | REC'44 |
| REC45 | 6 | BLUE | 6 | REC'45 |
| REC42 | 7 | PURPLE | 7 | REC'42 |
| REC43 | 8 | GRAY | 8 | REC'43 |
| REC40 | 9 | WHITE | 9 | REC'40 |
| REC41 | 10 | BLACK | 10 | REC'41 |
| A GND | 11 | BROWN | 11 | A GND |
| A GND | 12 | RED | 12 | A GND |
| REC38 | 13 | ORANGE | 13 | REC'38 |
| REC39 | 14 | YELLOW | 14 | REC'39 |
| REC36 | 15 | GREEN | 15 | REC'36 |
| REC37 | 16 | BLUE | 16 | REC'37 |
| REC34 | 17 | PURPLE | 17 | REC'34 |
| REC35 | 18 | GRAY | 18 | REC'35 |
| REC32 | 19 | WHITE | 19 | REC'32 |
| REC33 | 20 | BLACK | 20 | REC'33 |
| A GND | 21 | BROWN | 21 | A GND |
| A GND | 22 | RED | 22 | A GND |
| REC30 | 23 | ORANGE | 23 | REC'30 |
| REC31 | 24 | YELLOW | 24 | REC'31 |

| | | | | | |
|---|---|---|---|---|---|
| Aloka | TITLE 名称 SSD-680 CABLE 620 | | | MODEL 形名 CO-GEU64-M01 | 1/1 |
| 3RD ANGLE PROJECTION 第3角法 | DRAWN 製図 | DESIGNED 設計 | CHECKED 検図 | APPD 承認 | DRAWING NO. 図番 |
| SCALE 尺度 | 土 '92.8.20 屋 | 土 '92.8.20 屋 | 92.8.20 隆 | 入江 92-8-26 | MC325882 |
| UNIT 単位 mm | | | | | |

REVISIONS 変更

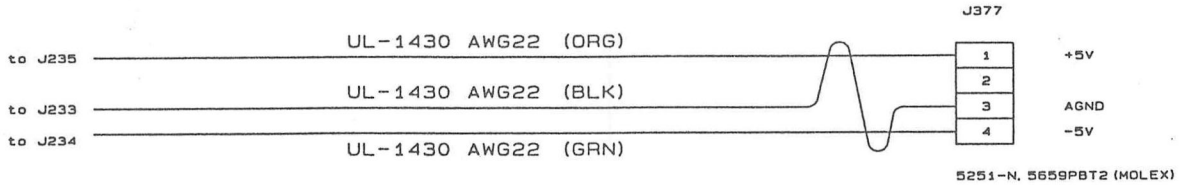


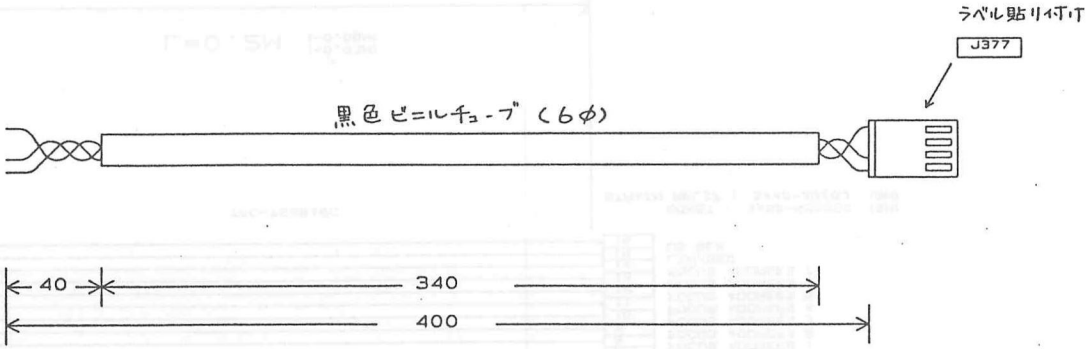


| | | | | | | | |
|---|---|---|---|---|---|---|---|
| REVISIONS変更 | Aloha | TITLE名称 CABLE 621 | | | | MODEL 形名 CO-UIM-325-A04 | 1/1 |
| | 3RD ANGLE PROJECTION 第3角法 | DRAWN 製図 | DESIGNED 設計 | CHECKED 検図 | APPD 承認 | DRAWING NO. 図番 MC325885 | |
| | SCALE尺度 / UNIT 単位 mm | | | | 入江 93-8-26 | | |

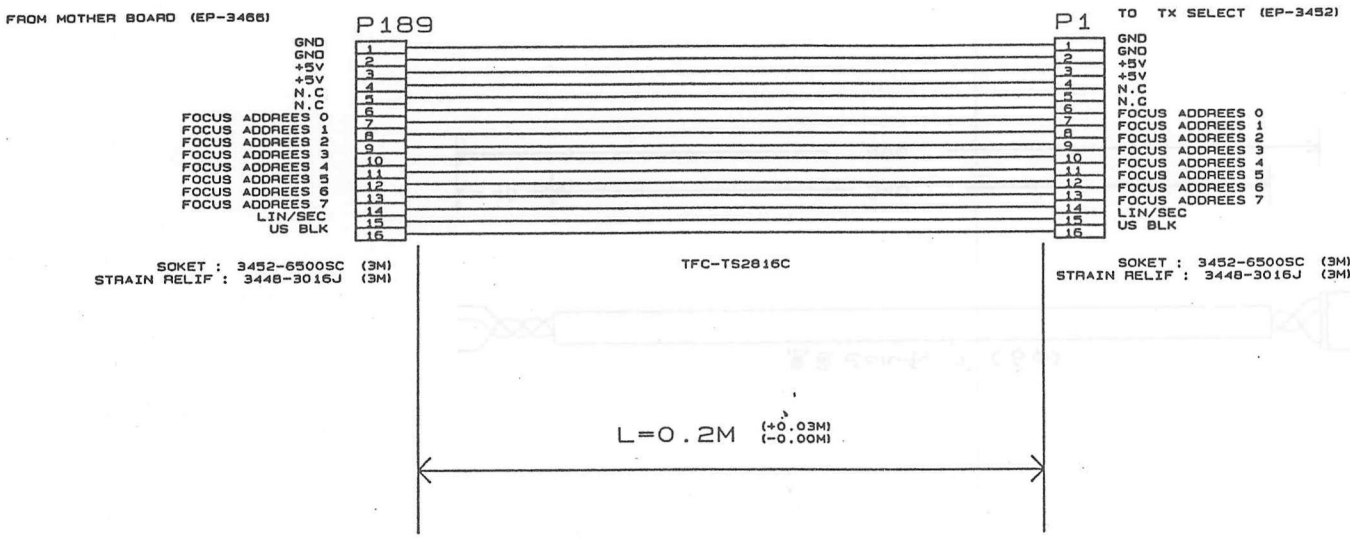


| | | | | | | |
|---|---|---|---|---|---|---|
| Aloka | TITLE CABLE 622 | | | | MODEL CO-GEU64-Q02 | 1/1 |
| 3RD ANGLE PROJECTION | DRAWN | DESIGNED | CHECKED | APPD | DRAWING NO. | |
| SCALE / UNITS mm | 上工検 92.7.09 関泉 | 上工検 92.7.09 関泉 | | 入江 92-8-26 | MC325883 | |

REVISIONS

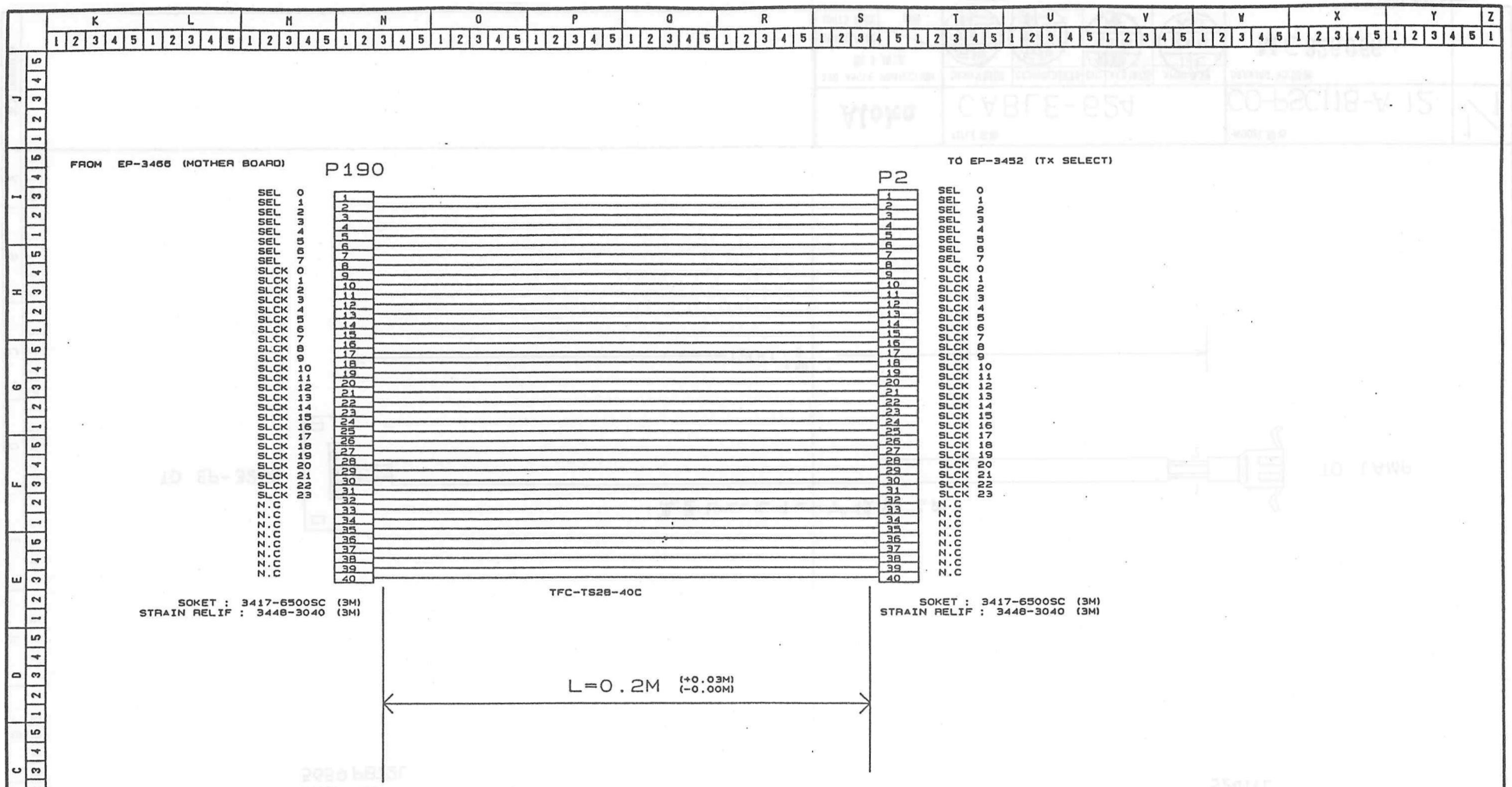


| | | | | | | | |
|---|---|---|---|---|---|---|---|
| REVISIONS | Aloka | TITLE: CABLE 623 | | | | MODEL: CO-GEU64-R02 | 1/1 |
| | 3RD ANGLE PROJECTION | DRAWN: 上工検 92.7.09 関東 | DESIGNED: 上工検 92.7.09 関東 | CHECKED: 企画G 92.9.10 | APPD: 入江 92-8-26 | DRAWING NO.: MC325884 | |
| | SCALE / UNITS mm | | | | | | |

7-61

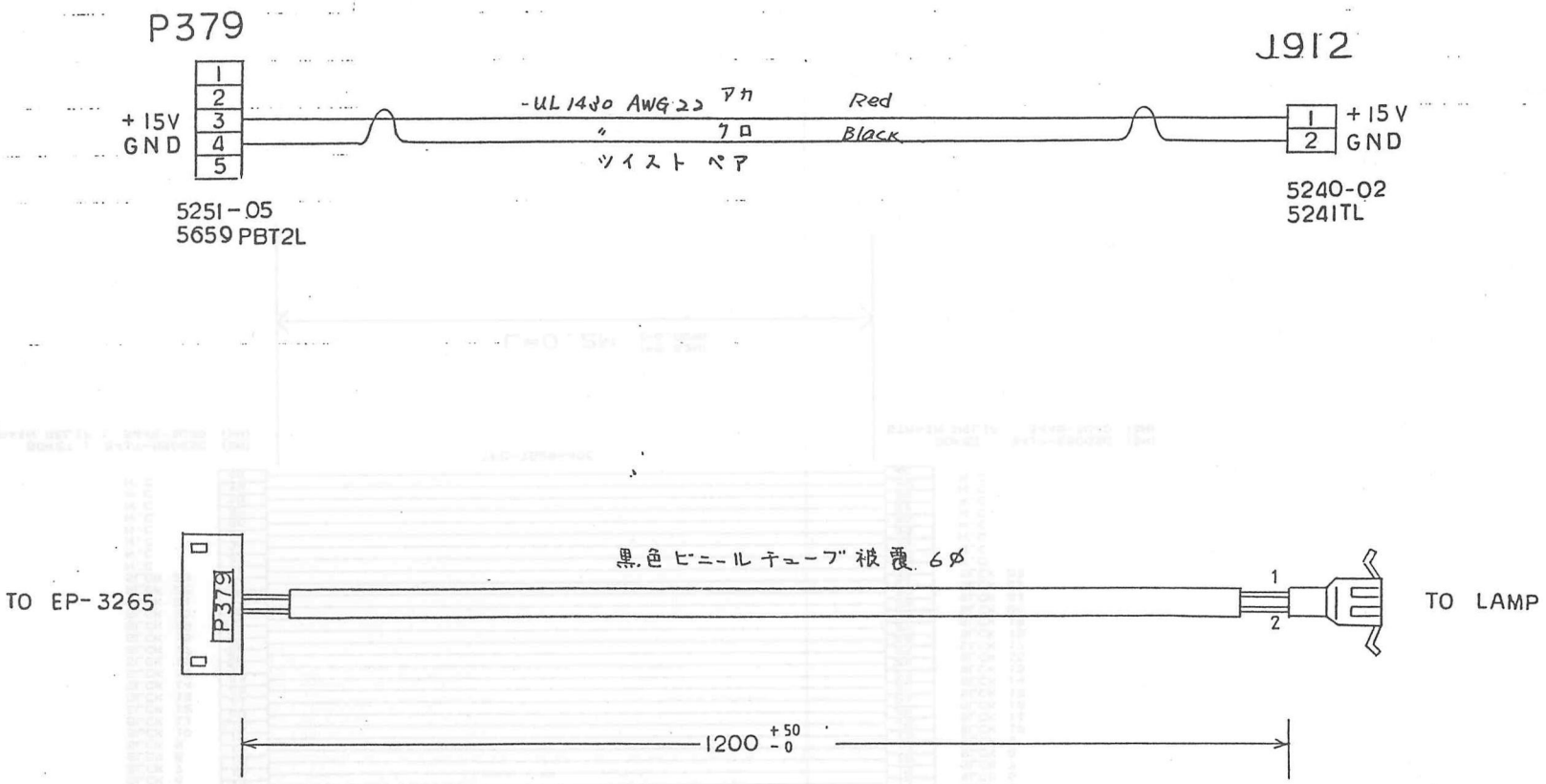


| | | | | | | |
|---|---|---|---|---|---|---|
| REVISIONS変更 | Aloka | TITLE名称 CABLE-624 | | | MODEL形名 CO-PSC118-A 12 | 1/1 |
| | 3RD ANGLE PROJECTION 第3角法 | DRAWN製図 石坂 92.9.24 利一 | DESIGNED設計 石坂 92.9.25 利一 | CHECKED検図 佐藤 92.9.25 隆 | APPD承認 T技 92.10.05 入江 | DRAWING NO.図番 MC326066 |
| | SCALE尺度 / UNITS単位 mm | | | | | |

L-013-10-82-A3

29-7

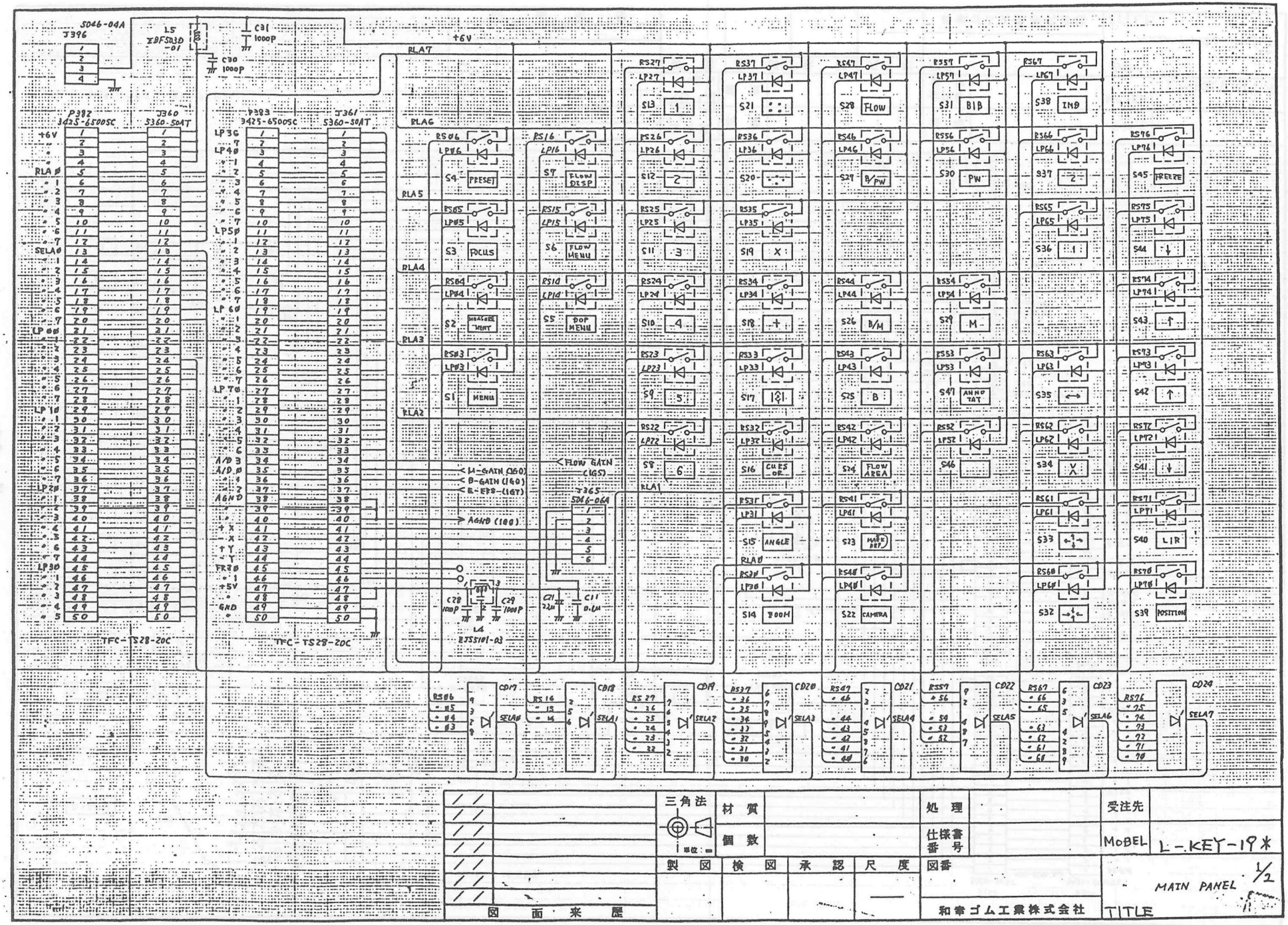


| | | | | | | | |
|---|---|---|---|---|---|---|---|
| 三角法 | 材質 | | 処理 | | 受注先 | | |
| 単位：mm | 個数 | | 仕様書番号 | | MoBEL | L-KEY-19* | |
| 製図 | 検図 | 承認 | 尺度 | 図番 | | | |
| 図面来歴 | | | — | 和幸ゴム工業株式会社 | TITLE | MAIN PANEL | 1/2 |

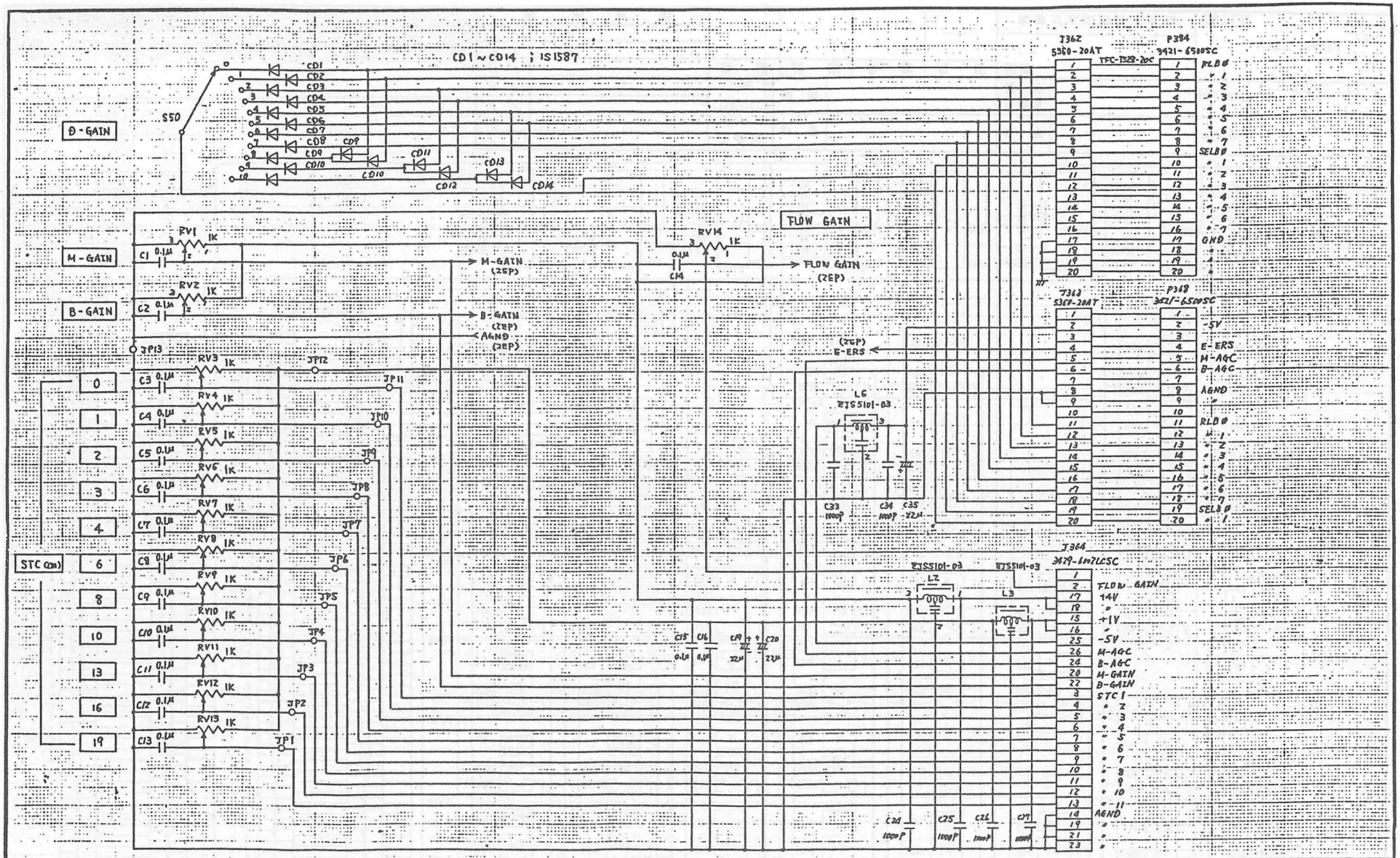


※JP1～JP13 ; VR-PCB

| | | | | | | | |
|---|---|---|---|---|---|---|---|
| 三角法 | 材質 | | 処理 | | 受注先 | | |
| 単位：mm | 個数 | | 仕様書番号 | | MODEL | L-KEY-19※ | |
| 製図 | 検図 | 承認 | 尺度 | 図番 | 名称 | MAIN PANEL | 2/2 |
| | | | — | 和幸ゴム工業株式会社 | TITLE | | |

図面来歴

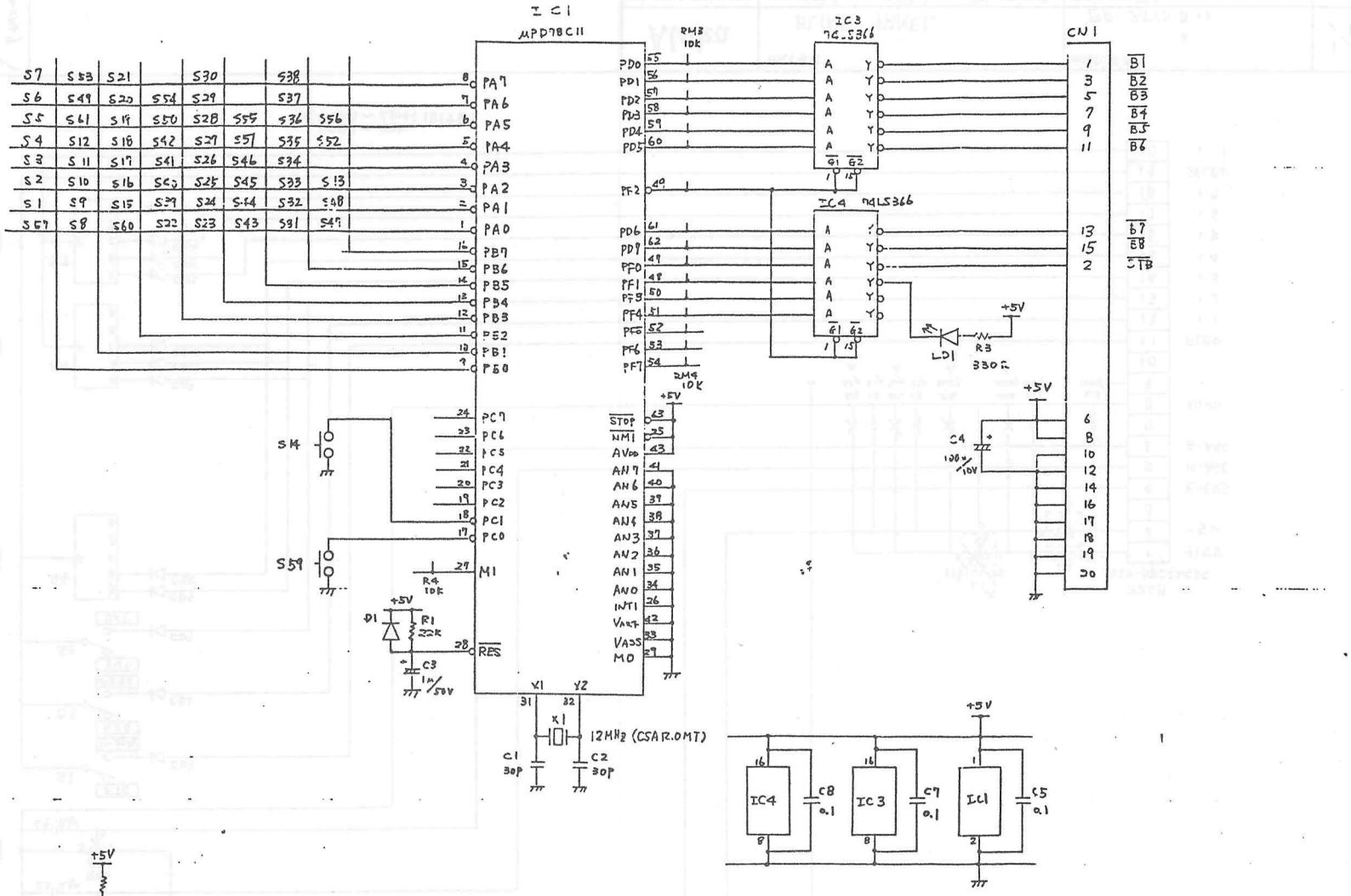


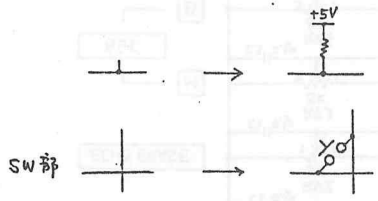


| | | | | | | | |
|---|---|---|---|---|---|---|---|
| | | 三角法 | 材質 | | 処理 | 受注先 | ALOKA |
| | | 単位：mm | 個数 | | 仕様書番号 | MODEL | L-KEY-26 |
| | | 製図 | 検図 | 承認 | 尺度 | 図番 | 名称 TITLE 1/1 |
| 5/23/90 | 新規発行 | | | | —— | 和幸ゴム工業株式会社 | Full Keyboard |
| 図面来歴 | | | | | | | |

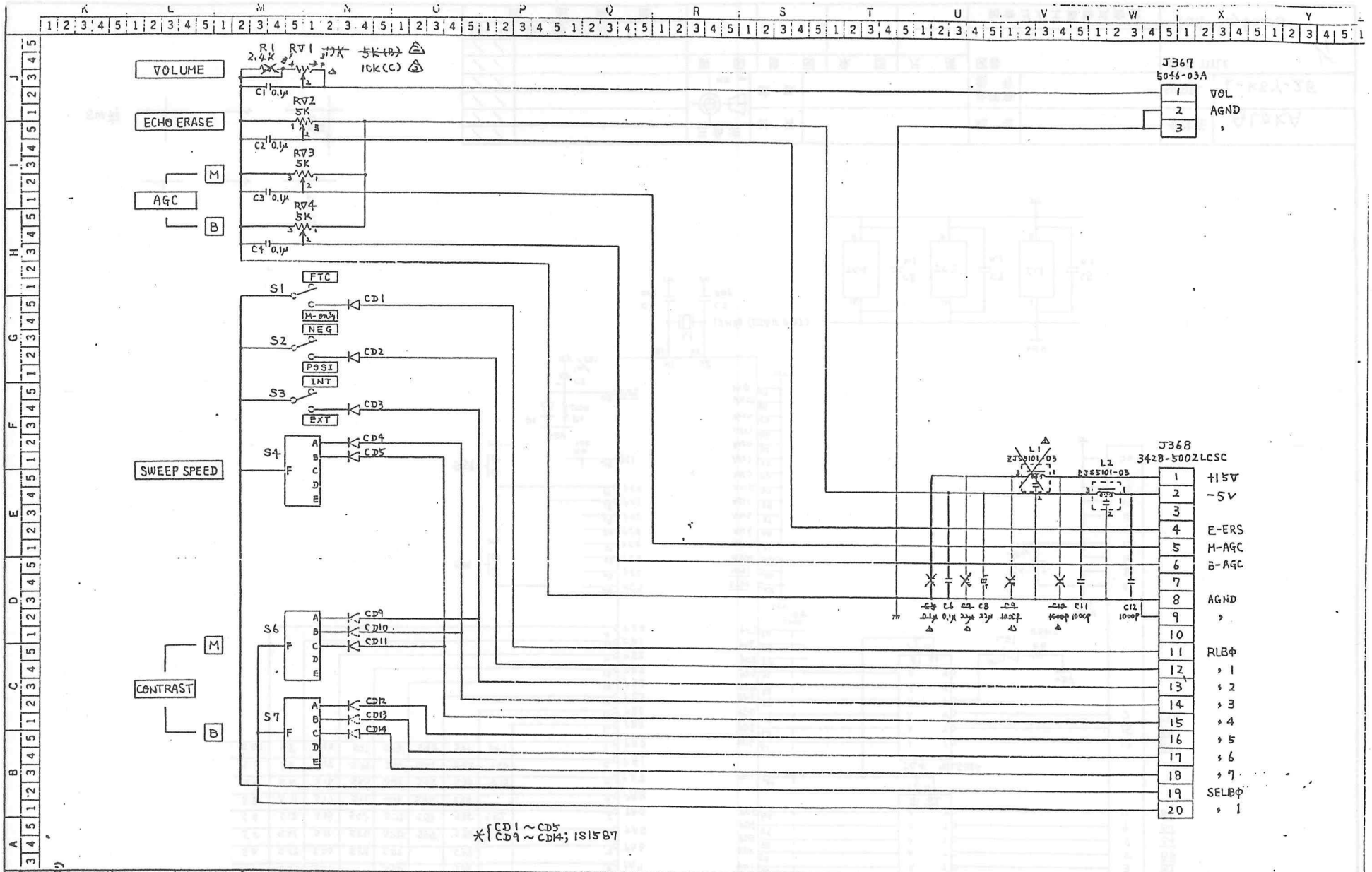


REVISIONS 変更

| | | | | | | |
|---|---|---|---|---|---|---|
| Aloka | TITLE 名称 BLIND PANEL | | | | MODEL 形名 EP-2512 B-1 | 1/1 |
| 3RD ANGLE PROJECTION 第3角法 | DRAWN 製図 | DESIGNED 設計 | CHECKED 検図 | APPD 承認 | DRAWING NO. 図番 MC317508 | |
| SCALE 尺度 | 尾崎 60-1-19 | | | | | |
| UNITS 単位 mm | | | | | | |

L-013-10-82-A3

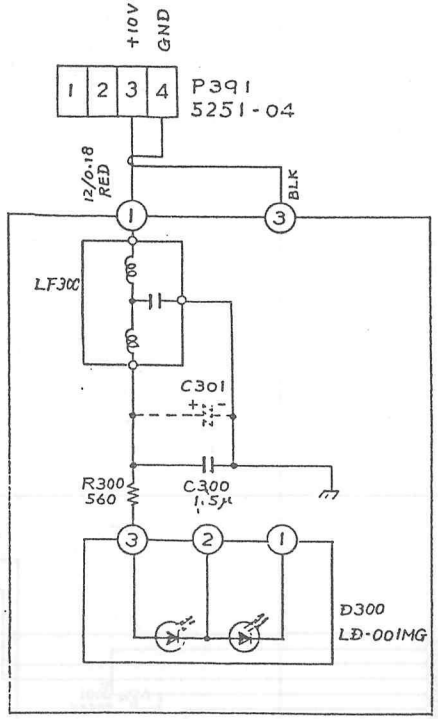


NOTE
・C301は取り付け不要

| | | | | | | |
|---|---|---|---|---|---|---|
| Aloka | TITLE 名称 POWER LAMP | | | | MODEL 形名 EP-3143 | 1/1 |
| 3RD ANGLE PROJECTION 第3角法 | DRAWN 製図 | DESIGNED 設計 | CHECKED 検図 | APPD 承認 | DRAWING NO. 図番 | |
| SCALE 尺度 | 土屋 '89-6-19 | 土屋 '89-6-19 | 宮坂 '89-6-19 | | MC316058 | |
| UNITS 単位 mm | | | | | | |

REVISIONS 変更

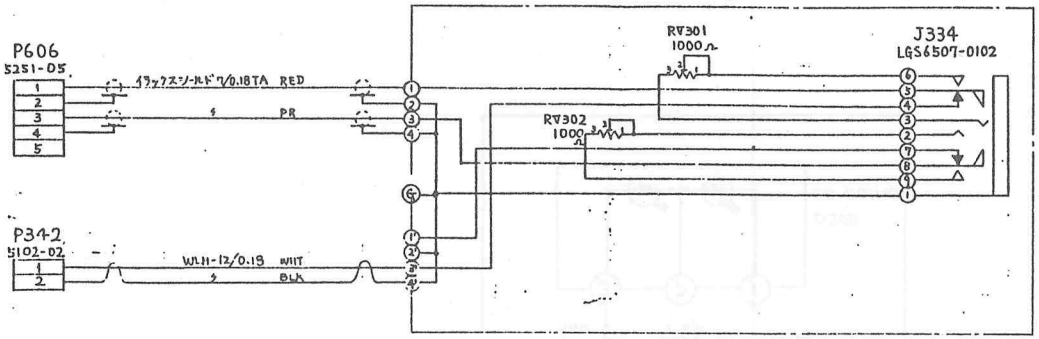


| | | | | | |
|---|---|---|---|---|---|
| Aloka | TITLE 名称: PHONE JACK | | | MODEL 形名: EP-2510 | 1/1 |
| 3RD ANGLE PROJECTION 第3角法 | DRAWN 製図: 尾崎 61-2-27 | DESIGNED 設計: | CHECKED 検図: | APPD 承認: | DRAWING NO. 図番: MC308018 |
| SCALE 尺度: | | | | | 出図 '89.7.1 |
| UNITS 単位: mm | | | | | |

REVISIONS 変更

J302 INDPEN-DENT

TX IND

P602 P601 P242 P5 P609

EP-5100* TP19

EP-2810* J612 ~~EP-5100* TP19~~

CBL600
CBL601
CBL602
CBL603

CBL609 CBL15

P14 J14

PLOBE 1

PLOBE 2

EP-3453-1~5X2

| J3 | J4 | J5 |
|---|---|---|
| P3 | P4 | P5 |
| J6 | | J9 |
| J7 | | |
| | | J8 |

| EP-3454 PROBE CHANGER | EP-3455B SELECTOR | EP-3456 Tx 1 | EP-3457 Tx 2 | EP-3458 PRE AMP | S.P | S.P | EP-3459 Rx FOCUS | EP-3459 Rx FOCUS | EP-3461 MAIN AMP | S.P | EP-3463 VBPF & GAIN CNT | EP-3464 Tx TRIG | EP-3465 TIMING & ADRS |
|---|---|---|---|---|---|---|---|---|---|---|---|---|---|
| J3 | J3 | J3 | J3 | J3 | | | | | DOP | | | J3 J4 | J157 |
| J4 | J4 | | | J4 | | | | | DOP | | | | |
| | | | | J5 | | | | | DSC | | | | |
| | | | | J6 | | | | | DSC | | | | |
| | | | | | | | | | DOP | | | | |
| J1 J2 | J1 J2 | J1 J2 | J1 J2 | J1 J2 | J1 J2 | J1 J2 | J1 J2 | J1 J2 | J1 J2 | J1 J2 | J1 J2 | J1 J2 | J1 J2 |

J100-1, -2 J101-1, -2 J102-1, -2 J103-1, 2 J104-1, -2 J105-1, -2 J106-1, -2 J107-1, -2 J108-1, -2 J109-1, -2 J110-1, -2 J111-1, -2 J112-1, -2 J113-1, -2

EP-3466 MOTHER BOARD

J121 P121 CBL9 P364 J132

1 +15V
2 A-GND
3 -15V
4 +5V
5 N.C
6 +5V
7 -5V
8 GND
9 A-GND
10 A-GND
11 A-GND
12 A-GND
13 A-GND
14 A-GND
15 A-GND

J131 HV HV-GND 1 2

J183 P183 CBL 610 P376

J185 J186 P185 P186 CBL620

J188 J184 J180 J181 J182

J198 J190 P1 P2 CBL622 CBL623 EP-3452

J122 J123 CBL611 CBL612 J164 J165 EP-3525

J160 J161 J162 J163 J166 P160 P161 P162 P163 P166

CBL608 CBL18 CBL17 CBL33B CBL609

P375 P518 J323 P604 P243 P226-2

REVISIONS

7-69

Aloka

| TITLE | MODEL | |
|---|---|---|
| Tx Rx UNIT | GEU-64 | 1/1 |

| 3RD ANGLE PROJECTION | DRAWN | DESIGNED | CHECKED | APPD | DRAWING NO. |
|---|---|---|---|---|---|
| SCALE / | 上工校 '92.11.05 開泉 | 上工校 '92.11.05 開泉 | 企画G '92.[illegible].06 近藤 | I校 '92.11.07 入江 | MC 326890 |
| UNITS mm | | | | | |

EP-3457 J103

| | A | J2 | B |
|---|---|---|---|
| A GND | A GND | 45 | A GND |
| A GND | A GND | 44 | A GND |
| +15V | +15V | 43 | +15V |
| +5V | +5V | 42 | +5V |
| -5V | -5V | 41 | -5V |
| A GND | A GND | 40 | A GND |
| | HV | 39 | HV |
| | HV | 38 | HV |
| | | 37 | |
| A GND | A GND | 36 | TX 9 |
| A GND | A GND | 35 | TX 57 |
| A GND | A GND | 34 | TX105 |
| A GND | A GND | 33 | TX 10 |
| A GND | A GND | 32 | TX 58 |
| A GND | A GND | 31 | TX106 |
| A GND | A GND | 30 | TX 11 |
| A GND | A GND | 29 | TX 59 |
| A GND | A GND | 28 | TX107 |
| A GND | A GND | 27 | TX 12 |
| A GND | A GND | 26 | TX 60 |
| A GND | A GND | 25 | TX108 |
| A GND | A GND | 24 | TX 13 |
| A GND | A GND | 23 | TX 61 |
| A GND | A GND | 22 | TX109 |
| A GND | A GND | 21 | TX 14 |
| A GND | A GND | 20 | TX 62 |
| A GND | A GND | 19 | TX110 |
| A GND | A GND | 18 | TX 15 |
| A GND | A GND | 17 | TX 63 |
| A GND | A GND | 16 | TX111 |
| A GND | A GND | 15 | TX 16 |
| A GND | A GND | 14 | TX 64 |
| A GND | A GND | 13 | TX112 |
| A GND | A GND | 12 | TX 25 |
| A GND | A GND | 11 | TX 73 |
| A GND | A GND | 10 | TX 26 |
| A GND | A GND | 9 | TX 74 |
| A GND | A GND | 8 | TX 27 |
| A GND | A GND | 7 | TX 75 |
| A GND | A GND | 6 | TX 28 |
| A GND | A GND | 5 | TX 76 |
| A GND | A GND | 4 | TX 29 |
| | | 3 | |
| | | 2 | |
| A GND | A GND | 1 | A GND |

TX2 J102

| | A | J2 | B |
|---|---|---|---|
| A GND | A GND | 45 | A GND |
| A GND | A GND | 44 | A GND |
| +15V | +15V | 43 | +15V |
| +5V | +5V | 42 | +5V |
| -5V | -5V | 41 | -5V |
| A GND | A GND | 40 | A GND |
| | HV | 39 | HV |
| | HV | 38 | HV |
| | | 37 | |
| A GND | A GND | 36 | TX 1 |
| A GND | A GND | 35 | TX 49 |
| A GND | A GND | 34 | TX 97 |
| A GND | A GND | 33 | TX 2 |
| A GND | A GND | 32 | TX 50 |
| A GND | A GND | 31 | TX 98 |
| A GND | A GND | 30 | TX 3 |
| A GND | A GND | 29 | TX 51 |
| A GND | A GND | 28 | TX 99 |
| A GND | A GND | 27 | TX 4 |
| A GND | A GND | 26 | TX 52 |
| A GND | A GND | 25 | TX100 |
| A GND | A GND | 24 | TX 5 |
| A GND | A GND | 23 | TX 53 |
| A GND | A GND | 22 | TX101 |
| A GND | A GND | 21 | TX 6 |
| A GND | A GND | 20 | TX 54 |
| A GND | A GND | 19 | TX102 |
| A GND | A GND | 18 | TX 7 |
| A GND | A GND | 17 | TX 55 |
| A GND | A GND | 16 | TX103 |
| A GND | A GND | 15 | TX 8 |
| A GND | A GND | 14 | TX 56 |
| A GND | A GND | 13 | TX104 |
| A GND | A GND | 12 | TX 17 |
| A GND | A GND | 11 | TX 65 |
| A GND | A GND | 10 | TX113 |
| A GND | A GND | 9 | TX 18 |
| A GND | A GND | 8 | TX 66 |
| A GND | A GND | 7 | TX114 |
| A GND | A GND | 6 | TX 19 |
| A GND | A GND | 5 | TX 67 |
| A GND | A GND | 4 | TX115 |
| A GND | A GND | 3 | TX 20 |
| A GND | A GND | 2 | TX 68 |
| A GND | A GND | 1 | TX116 |
| | | | A GND |
| | | | PRB1/2 |
| A GND | A GND | | A GND |

EP-3456 J102

| | A | J2 | B |
|---|---|---|---|
| A GND | A GND | 45 | A GND |
| A GND | A GND | 44 | A GND |
| +15V | +15V | 43 | +15V |
| +5V | +5V | 42 | +5V |
| -5V | -5V | 41 | -5V |
| A GND | A GND | 40 | A GND |
| | HV | 39 | HV |
| | HV | 38 | HV |
| | | 37 | |
| A GND | A GND | 36 | TX 1 |
| A GND | A GND | 35 | TX 49 |
| A GND | A GND | 34 | TX 97 |
| A GND | A GND | 33 | TX 2 |
| A GND | A GND | 32 | TX 50 |
| A GND | A GND | 31 | TX 98 |
| A GND | A GND | 30 | TX 3 |
| A GND | A GND | 29 | TX 51 |
| A GND | A GND | 28 | TX 99 |
| A GND | A GND | 27 | TX 4 |
| A GND | A GND | 26 | TX 52 |
| A GND | A GND | 25 | TX100 |
| A GND | A GND | 24 | TX 5 |
| A GND | A GND | 23 | TX 53 |
| A GND | A GND | 22 | TX101 |
| A GND | A GND | 21 | TX 6 |
| A GND | A GND | 20 | TX 54 |
| A GND | A GND | 19 | TX102 |
| A GND | A GND | 18 | TX 7 |
| A GND | A GND | 17 | TX 55 |
| A GND | A GND | 16 | TX103 |
| A GND | A GND | 15 | TX 8 |
| A GND | A GND | 14 | TX 56 |
| A GND | A GND | 13 | TX104 |
| A GND | A GND | 12 | TX 17 |
| A GND | A GND | 11 | TX 65 |
| A GND | A GND | 10 | TX113 |
| A GND | A GND | 9 | TX 18 |
| A GND | A GND | 8 | TX 66 |
| A GND | A GND | 7 | TX114 |
| A GND | A GND | 6 | TX 19 |
| A GND | A GND | 5 | TX 67 |
| A GND | A GND | 4 | TX115 |
| A GND | A GND | 3 | TX 20 |
| A GND | A GND | 2 | TX 68 |
| A GND | A GND | 1 | TX116 |
| | | | A GND |
| | | | PRB1/2 |
| A GND | A GND | | A GND |

EP-3455 J101

| | A | J2 | B |
|---|---|---|---|
| A GND | A GND | 45 | A GND |
| A GND | A GND | 44 | A GND |
| +5V | +5V | 43 | +5V |
| A GND | A GND | 42 | A GND |
| A GND | A GND | 41 | TX 1 |
| A GND | A GND | 40 | TX 49 |
| A GND | A GND | 39 | TX 97 |
| A GND | A GND | 38 | TX 2 |
| A GND | A GND | 37 | TX 50 |
| A GND | A GND | 36 | TX 98 |
| A GND | A GND | 35 | TX 3 |
| A GND | A GND | 34 | TX 51 |
| A GND | A GND | 33 | TX 99 |
| A GND | A GND | 32 | TX 4 |
| A GND | A GND | 31 | TX 52 |
| A GND | A GND | 30 | TX100 |
| A GND | A GND | 29 | A GND |
| A GND | A GND | 28 | TX 5 |
| A GND | A GND | 27 | TX 53 |
| A GND | A GND | 26 | TX101 |
| A GND | A GND | 25 | TX 6 |
| A GND | A GND | 24 | TX 54 |
| A GND | A GND | 23 | TX102 |
| A GND | A GND | 22 | TX 7 |
| A GND | A GND | 21 | TX 55 |
| A GND | A GND | 20 | TX103 |
| A GND | A GND | 19 | TX 8 |
| A GND | A GND | 18 | TX 56 |
| A GND | A GND | 17 | TX104 |
| A GND | A GND | 16 | A GND |
| A GND | A GND | 15 | TX 17 |
| A GND | A GND | 14 | TX 65 |
| A GND | A GND | 13 | TX113 |
| A GND | A GND | 12 | TX 18 |
| A GND | A GND | 11 | TX 66 |
| A GND | A GND | 10 | TX114 |
| A GND | A GND | 9 | TX 19 |
| A GND | A GND | 8 | TX 67 |
| A GND | A GND | 7 | TX115 |
| A GND | A GND | 6 | TX 20 |
| A GND | A GND | 5 | TX 68 |
| A GND | A GND | 4 | TX116 |
| A GND | A GND | 3 | A GND |
| | | 2 | |
| A GND | A GND | 1 | A GND |

SELECTOR J101

| | A | J2 | B |
|---|---|---|---|
| A GND | A GND | 45 | A GND |
| A GND | A GND | 44 | A GND |
| +5V | +5V | 43 | +5V |
| A GND | A GND | 42 | A GND |
| A GND | A GND | 41 | TX 1 |
| A GND | A GND | 40 | TX 49 |
| A GND | A GND | 39 | TX 97 |
| A GND | A GND | 38 | TX 2 |
| A GND | A GND | 37 | TX 50 |
| A GND | A GND | 36 | TX 98 |
| A GND | A GND | 35 | TX 3 |
| A GND | A GND | 34 | TX 51 |
| A GND | A GND | 33 | TX 99 |
| A GND | A GND | 32 | TX 4 |
| A GND | A GND | 31 | TX 52 |
| A GND | A GND | 30 | TX100 |
| A GND | A GND | 29 | A GND |
| A GND | A GND | 28 | TX 5 |
| A GND | A GND | 27 | TX 53 |
| A GND | A GND | 26 | TX101 |
| A GND | A GND | 25 | TX 6 |
| A GND | A GND | 24 | TX 54 |
| A GND | A GND | 23 | TX102 |
| A GND | A GND | 22 | TX 7 |
| A GND | A GND | 21 | TX 55 |
| A GND | A GND | 20 | TX103 |
| A GND | A GND | 19 | TX 8 |
| A GND | A GND | 18 | TX 56 |
| A GND | A GND | 17 | TX104 |
| A GND | A GND | 16 | A GND |
| A GND | A GND | 15 | TX 17 |
| A GND | A GND | 14 | TX 65 |
| A GND | A GND | 13 | TX113 |
| A GND | A GND | 12 | TX 18 |
| A GND | A GND | 11 | TX 66 |
| A GND | A GND | 10 | TX114 |
| A GND | A GND | 9 | TX 19 |
| A GND | A GND | 8 | TX 67 |
| A GND | A GND | 7 | TX115 |
| A GND | A GND | 6 | TX 20 |
| A GND | A GND | 5 | TX 68 |
| A GND | A GND | 4 | TX116 |
| A GND | A GND | 3 | A GND |
| A GND | A GND | 2 | A GND |
| A GND | A GND | 1 | A GND |

EP-3452 PROBECHANGER J100

| | A | J2 | B |
|---|---|---|---|
| A GND | A GND | 45 | A GND |
| A GND | A GND | 44 | A GND |
| | | 43 | |
| A GND | A GND | 42 | A GND |
| TX 1 | TX 1 | 41 | TX 9 |
| TX 49 | TX 49 | 40 | TX 57 |
| TX 97 | TX 97 | 39 | TX105 |
| TX 2 | TX 2 | 38 | TX 10 |
| TX 50 | TX 50 | 37 | TX 58 |
| TX 98 | TX 98 | 36 | TX106 |
| TX 3 | TX 3 | 35 | TX 11 |
| TX 51 | TX 51 | 34 | TX 59 |
| TX 99 | TX 99 | 33 | TX107 |
| TX 4 | TX 4 | 32 | TX 12 |
| TX 52 | TX 52 | 31 | TX 60 |
| TX100 | TX100 | 30 | TX108 |
| A GND | A GND | 29 | A GND |
| TX 5 | TX 5 | 28 | TX 13 |
| TX 53 | TX 53 | 27 | TX 61 |
| TX101 | TX101 | 26 | TX109 |
| TX 6 | TX 6 | 25 | TX 14 |
| TX 54 | TX 54 | 24 | TX 62 |
| TX102 | TX102 | 23 | TX110 |
| TX 7 | TX 7 | 22 | TX 15 |
| TX 55 | TX 55 | 21 | TX 63 |
| TX103 | TX103 | 20 | TX111 |
| TX 8 | TX 8 | 19 | TX 16 |
| TX 56 | TX 56 | 18 | TX 64 |
| TX104 | TX104 | 17 | TX112 |
| A GND | A GND | 16 | A GND |
| TX 17 | TX 17 | 15 | TX 25 |
| TX 65 | TX 65 | 14 | TX 73 |
| TX113 | TX113 | 13 | TX 26 |
| TX 18 | TX 18 | 12 | TX 74 |
| TX 66 | TX 66 | 11 | TX 27 |
| TX114 | TX114 | 10 | TX 75 |
| TX 19 | TX 19 | 9 | TX 28 |
| TX 67 | TX 67 | 8 | TX 76 |
| TX115 | TX115 | 7 | A GND |
| TX 20 | TX 20 | 6 | TX 29 |
| TX 68 | TX 68 | 5 | TX 77 |
| TX116 | TX116 | 4 | TX 30 |
| A GND | A GND | 3 | TX 78 |
| PRB1/2 | PRB1/2 | 2 | ON/OFF |
| A GND | A GND | 1 | A GND |

EP-3460 (BOXFOCUS 2) J106

| | A | J2 | B |
|---|---|---|---|
| A GND | A GND | 45 | A GND |
| A GND | A GND | 44 | A GND |
| +15V | +15V | 43 | +15V |
| -15V | -15V | 42 | -15V |
| +5V | +5V | 41 | +5V |
| -5V | -5V | 40 | -5V |
| A GND | A GND | 39 | A GND |
| REC 0 | REC 1 | 38 | REC 1 |
| REC 2 | REC 3 | 37 | REC 3 |
| REC 4 | REC 5 | 36 | REC 5 |
| REC 6 | REC 7 | 35 | REC 7 |
| A GND | A GND | 34 | A GND |
| REC 8 | REC 9 | 33 | REC 9 |
| REC10 | REC11 | 32 | REC11 |
| REC12 | REC13 | 31 | REC13 |
| REC14 | REC15 | 30 | REC15 |
| A GND | A GND | 29 | A GND |
| REC16 | REC17 | 28 | REC17 |
| REC18 | REC19 | 27 | REC19 |
| REC20 | REC21 | 26 | REC21 |
| REC22 | REC23 | 25 | REC23 |
| A GND | A GND | 24 | A GND |
| RDC24 | RDC25 | 23 | RDC25 |
| REC26 | REC27 | 22 | REC27 |
| REC28 | REC29 | 21 | REC29 |
| REC30 | REC31 | 20 | REC31 |
| A GND | A GND | 19 | A GND |
| REC32 | REC33 | 18 | REC33 |
| REC34 | REC35 | 17 | RDC35 |
| REC36 | REC37 | 16 | REC37 |
| REC38 | REC39 | 15 | REC39 |
| A GND | A GND | 14 | A GND |
| RECA0 | RECA1 | 13 | RECA1 |
| RECA2 | RECA3 | 12 | RECA3 |
| RECA4 | RECA5 | 11 | RECA5 |
| RECA6 | RECA7 | 10 | RECA7 |
| A GND | A GND | 9 | A GND |
| A GND | RECSEC B | 8 | RECSEC A |
| | | 7 | |
| | | 6 | |
| | | 5 | |
| | | 4 | |
| | | 3 | |
| | | 2 | |
| A GND | A GND | 1 | A GND |

EP-3460 (BOXFOCUS 1) J105

| | A | J2 | B |
|---|---|---|---|
| A GND | A GND | 45 | A GND |
| A GND | A GND | 44 | A GND |
| +15V | +15V | 43 | +15V |
| -15V | -15V | 42 | -15V |
| +5V | +5V | 41 | +5V |
| -5V | -5V | 40 | -5V |
| A GND | A GND | 39 | A GND |
| REC 0 | REC 1 | 38 | REC 1 |
| REC 2 | REC 3 | 37 | REC 3 |
| REC 4 | REC 5 | 36 | REC 5 |
| REC 6 | REC 7 | 35 | REC 7 |
| A GND | A GND | 34 | A GND |
| REC 8 | REC 9 | 33 | REC 9 |
| REC10 | REC11 | 32 | REC11 |
| REC12 | REC13 | 31 | REC13 |
| REC14 | REC15 | 30 | REC15 |
| A GND | A GND | 29 | A GND |
| REC16 | REC17 | 28 | REC17 |
| REC18 | REC19 | 27 | REC19 |
| REC20 | REC21 | 26 | REC21 |
| REC22 | REC23 | 25 | REC23 |
| A GND | A GND | 24 | A GND |
| RDC24 | RDC25 | 23 | RDC25 |
| REC26 | REC27 | 22 | REC27 |
| REC28 | REC29 | 21 | REC29 |
| REC30 | REC31 | 20 | REC31 |
| A GND | A GND | 19 | A GND |
| REC32 | REC33 | 18 | REC33 |
| RDC34 | RDC35 | 17 | RDC35 |
| REC36 | REC37 | 16 | REC37 |
| REC38 | REC39 | 15 | REC39 |
| A GND | A GND | 14 | A GND |
| RECA0 | RECA1 | 13 | RECA1 |
| RECA2 | RECA3 | 12 | RECA3 |
| RECA4 | RECA5 | 11 | RECA5 |
| RECA6 | RECA7 | 10 | RECA7 |
| A GND | A GND | 9 | A GND |
| A GND | RECSEC A | 8 | RECSEC B |
| | | 7 | |
| | | 6 | |
| | | 5 | |
| | | 4 | |
| | | 3 | |
| | | 2 | |
| A GND | A GND | 1 | A GND |

PRE AMP J104

| | A | J2 | B |
|---|---|---|---|
| A GND | A GND | 45 | A GND |
| A GND | A GND | 44 | A GND |
| +15V | +15V | 43 | +15V |
| +5V | +5V | 42 | +5V |
| -5V | -5V | 41 | -5V |
| A GND | A GND | 40 | A GND |
| A GND | A GND | 39 | A GND |
| REC 0 | REC 1 | 38 | REC 1 |
| REC 2 | REC 3 | 37 | REC 3 |
| REC 4 | REC 5 | 36 | REC 5 |
| REC 6 | REC 7 | 35 | REC 7 |
| A GND | A GND | 34 | A GND |
| REC 8 | REC 9 | 33 | REC 9 |
| REC10 | REC11 | 32 | REC11 |
| REC12 | REC13 | 31 | REC13 |
| REC14 | REC15 | 30 | REC15 |
| A GND | A GND | 29 | A GND |
| REC16 | REC17 | 28 | REC17 |
| REC18 | REC19 | 27 | REC19 |
| REC20 | REC21 | 26 | REC21 |
| REC22 | REC23 | 25 | REC23 |
| A GND | A GND | 24 | A GND |
| RDC24 | RDC25 | 23 | RDC25 |
| REC26 | REC27 | 22 | REC27 |
| REC28 | REC29 | 21 | REC29 |
| REC30 | REC31 | 20 | REC31 |
| A GND | A GND | 19 | A GND |
| REC32 | REC33 | 18 | REC33 |
| RDC34 | RDC35 | 17 | RDC35 |
| REC36 | REC37 | 16 | REC37 |
| REC38 | REC39 | 15 | REC39 |
| A GND | A GND | 14 | A GND |
| RECA0 | RECA1 | 13 | RECA1 |
| RECA2 | RECA3 | 12 | RECA3 |
| RECA4 | RECA5 | 11 | RECA5 |
| RECA6 | RECA7 | 10 | RECA7 |
| A GND | A GND | 9 | A GND |
| A GND | RECSEC B | 8 | RECSEC A |
| | | 7 | |
| | | 6 | |
| | | 5 | |
| | | 4 | |
| | | 3 | |
| | | 2 | |
| A GND | A GND | 1 | A GND |

J106

| | A | J1 | B |
|---|---|---|---|
| A GND | A GND | 45 | A GND |
| A GND | A GND | 44 | A GND |
| A GND | A GND | 43 | A GND |
| A GND | A GND | 42 | A GND |
| A GND | A GND | 41 | A GND |
| DSB 0 | DSB 1 | 40 | DSB 1 |
| DSB 2 | DSB 3 | 39 | DSB 3 |
| DSB 4 | DSB 5 | 38 | DSB 5 |
| YSB 0 | YSB 1 | 37 | YSB 1 |
| YSB 2 | GND | 36 | GND |
| GND | CKB | 35 | CKB |
| R.ADB0 | R.ADB1 | 34 | R.ADB1 |
| R.ADB2 | R.ADB3 | 33 | R.ADB3 |
| R.ADB4 | R.ADB5 | 32 | R.ADB5 |
| RB | C.SB/ | 31 | C.SB/ |
| | | 30 | |
| B/D GATE | | 29 | |
| SB 1 | SB 2 | 28 | SB 2 |
| XB 3 | SB 0 | 27 | SB 0 |
| XB 1 | XB 2 | 26 | XB 2 |
| D/ | XB 0 | 25 | XB 0 |
| FADRS 6 | GND | 24 | GND |
| FADRS 4 | FADRS 5 | 23 | FADRS 5 |
| FADRS 2 | FADRS 3 | 22 | FADRS 3 |
| FADRS 0 | FADRS 1 | 21 | FADRS 1 |
| | | 20 | |
| | | 19 | |
| | USBLK/ | 18 | USBLK/ |
| | GND | 17 | GND |
| ADRS 1 | ADRS 0 | 16 | ADRS 0 |
| ADRS 3 | ADRS 2 | 15 | ADRS 2 |
| GND | EN1/ | 14 | EN1/ |
| DATA 6 | DATA 7 | 13 | DATA 7 |
| DATA 4 | DATA 5 | 12 | DATA 5 |
| DATA 2 | DATA 3 | 11 | DATA 3 |
| DATA 0 | DATA 1 | 10 | DATA 1 |
| | | 9 | |
| | | 8 | |
| +5.1V | +5.1V | 7 | +5.1V |
| | | 6 | |
| +5V | +5V | 5 | +5V |
| -15V | -15V | 4 | -15V |
| +15V | +15V | 3 | +15V |
| A GND | A GND | 2 | A GND |
| A GND | A GND | 1 | A GND |

J105

| | A | J1 | B |
|---|---|---|---|
| A GND | A GND | 45 | A GND |
| A GND | A GND | 44 | A GND |
| A GND | A GND | 43 | A GND |
| A GND | A GND | 42 | A GND |
| A GND | A GND | 41 | A GND |
| DSA 0 | DSA 1 | 40 | DSA 1 |
| DSA 2 | DSA 3 | 39 | DSA 3 |
| DSA 4 | DSA 5 | 38 | DSA 5 |
| YSA 0 | YSA 1 | 37 | YSA 1 |
| YSA 2 | GND | 36 | GND |
| GND | CKA | 35 | CKA |
| R.ADA0 | R.ADA1 | 34 | R.ADA1 |
| R.ADA2 | R.ADA3 | 33 | R.ADA3 |
| R.ADA4 | R.ADA5 | 32 | R.ADA5 |
| RA | C.SA/ | 31 | C.SA/ |
| | | 30 | |
| B/D GATE | | 29 | |
| SA 1 | SA 2 | 28 | SA 2 |
| XA3 | SA 0 | 27 | SA 0 |
| XA 1 | XA 2 | 26 | XA 2 |
| D/ | XA 0 | 25 | XA 0 |
| FADRS 6 | +5V | 24 | +5V |
| FADRS 4 | FADRS 5 | 23 | FADRS 5 |
| FADRS 2 | FADRS 3 | 22 | FADRS 3 |
| FADRS 0 | FADRS 1 | 21 | FADRS 1 |
| | | 20 | |
| | | 19 | |
| | USBLK/ | 18 | USBLK/ |
| | GND | 17 | GND |
| ADRS 1 | ADRS 0 | 16 | ADRS 0 |
| ADRS 3 | ADRS 2 | 15 | ADRS 2 |
| GND | EN1/ | 14 | EN1/ |
| DATA 6 | DATA 7 | 13 | DATA 7 |
| DATA 4 | DATA 5 | 12 | DATA 5 |
| DATA 2 | DATA 3 | 11 | DATA 3 |
| DATA 0 | DATA 1 | 10 | DATA 1 |
| | | 9 | |
| | | 8 | |
| +5.1V | +5.1V | 7 | +5.1V |
| | | 6 | |
| +5V | +5V | 5 | +5V |
| -15V | -15V | 4 | -15V |
| +15V | +15V | 3 | +15V |
| A GND | A GND | 2 | A GND |
| A GND | A GND | 1 | A GND |

J104

| | A | J1 | B |
|---|---|---|---|
| A GND | A GND | 45 | A GND |
| REC 30 | REC 31 | 44 | REC 31 |
| A GND | A GND | 43 | A GND |
| REC 32 | REC 33 | 42 | REC 33 |
| REC 34 | REC 35 | 41 | REC 35 |
| REC 36 | REC 37 | 40 | REC 37 |
| REC 38 | REC 39 | 39 | REC 39 |
| A GND | A GND | 38 | A GND |
| REC 40 | REC 41 | 37 | REC 41 |
| REC 42 | REC 43 | 36 | REC 43 |
| REC 44 | REC 45 | 35 | REC 45 |
| REC 46 | REC 47 | 34 | REC 47 |
| A GND | A GND | 33 | A GND |
| | | 32 | |
| | | 31 | |
| | | 30 | |
| | | 29 | |
| | | 28 | |
| | | 27 | |
| | | 26 | |
| | | 25 | |
| | | 24 | |
| | | 23 | |
| | | 22 | |
| | | 21 | |
| | | 20 | |
| | | 19 | |
| | | 18 | |
| | | 17 | |
| | | 16 | |
| | | 15 | |
| | | 14 | |
| | | 13 | |
| | | 12 | |
| | | 11 | |
| | | 10 | |
| A GND | PRE STC | 9 | PRE STC |
| | | 8 | |
| -5V | -5V | 7 | -5V |
| +5V | +5V | 6 | +5V |
| -15V | -15V | 5 | -15V |
| +15V | +15V | 4 | +15V |
| A GND | A GND | 3 | A GND |
| A GND | A GND | 2 | A GND |
| A GND | A GND | 1 | A GND |

J100

| | A | J1 | B |
|---|---|---|---|
| A GND | A GND | 45 | A GND |
| TX 21 | TX 21 | 44 | TX 31 |
| TX 69 | TX 69 | 43 | TX 79 |
| TX117 | TX117 | 42 | TX 32 |
| TX 22 | TX 22 | 41 | TX 80 |
| TX 70 | TX 70 | 40 | A GND |
| TX118 | TX118 | 39 | TX 41 |
| TX 23 | TX 23 | 38 | TX 89 |
| TX 71 | TX 71 | 37 | TX 42 |
| TX119 | TX119 | 36 | TX 90 |
| TX 24 | TX 24 | 35 | TX 43 |
| TX 72 | TX 72 | 34 | TX 91 |
| TX120 | TX120 | 33 | TX 44 |
| A GND | A GND | 32 | TX 92 |
| A GND | A GND | 31 | A GND |
| TX 33 | TX 33 | 30 | TX 45 |
| TX 81 | TX 81 | 29 | TX 92 |
| TX 34 | TX 34 | 28 | TX 46 |
| TX 82 | TX 82 | 27 | TX 94 |
| TX 35 | TX 35 | 26 | TX 47 |
| TX 83 | TX 83 | 25 | TX 95 |
| TX 36 | TX 36 | 24 | TX 48 |
| TX 84 | TX 84 | 23 | TX 96 |
| A GND | A GND | 22 | A GND |
| TX 37 | TX 37 | 21 | TX 38 |
| TX 85 | TX 85 | 20 | TX 86 |
| TX 39 | TX 39 | 19 | TX 40 |
| TX 87 | TX 87 | 18 | TX 88 |
| A GND | A GND | 17 | A GND |
| (+5.1V) | (+5.1V) | 16 | (+5.1V) |
| +5V | +5V | 15 | +5V |
| A GND | A GND | 14 | A GND |
| +5VA | A1 GND | 13 | A1 GND |
| PC301 | PC 302 | 12 | PC 302 |
| PC303 | PCD 208 | 11 | PCD 208 |
| PCD 207 | PCD 206 | 10 | PCD 206 |
| PCD 205 | PCD 204 | 9 | PCD 204 |
| PCD 203 | PCD 202 | 8 | PCD 202 |
| PCD 201 | PCD 108 | 7 | PCD 108 |
| PCD 107 | PCD 106 | 6 | PCD 106 |
| PCD 105 | PCD 104 | 5 | PCD 104 |
| PCD 103 | PCD 102 | 4 | PCD 102 |
| PCD 101 | PS 1 | 3 | PS 1 |
| A1 GND | A1 GND | 2 | A1 GND |
| A1 GND | A1 GND | 1 | A1 GND |

REVISIONS変更

7-70

Aloka

3RD ANGLE PROJECTION 第3角法

SCALE 尺度

UNITS 単位 mm

TITLE名称 Tx Rx unit

MOTHER BOARD

| DRAWN製図 | DESIGNED設計 | CHECKED検図 | APPD承認 |
|---|---|---|---|
| 企画G '92.9.10 近藤 | 企画G '92.9.10 近藤 | '92.9.10 | 1技 '92.9.10 入江 |

MODEL形名 EP-3466B

DRAWING NO.図番 MC 325922

1/16

L-013-10-82-A3

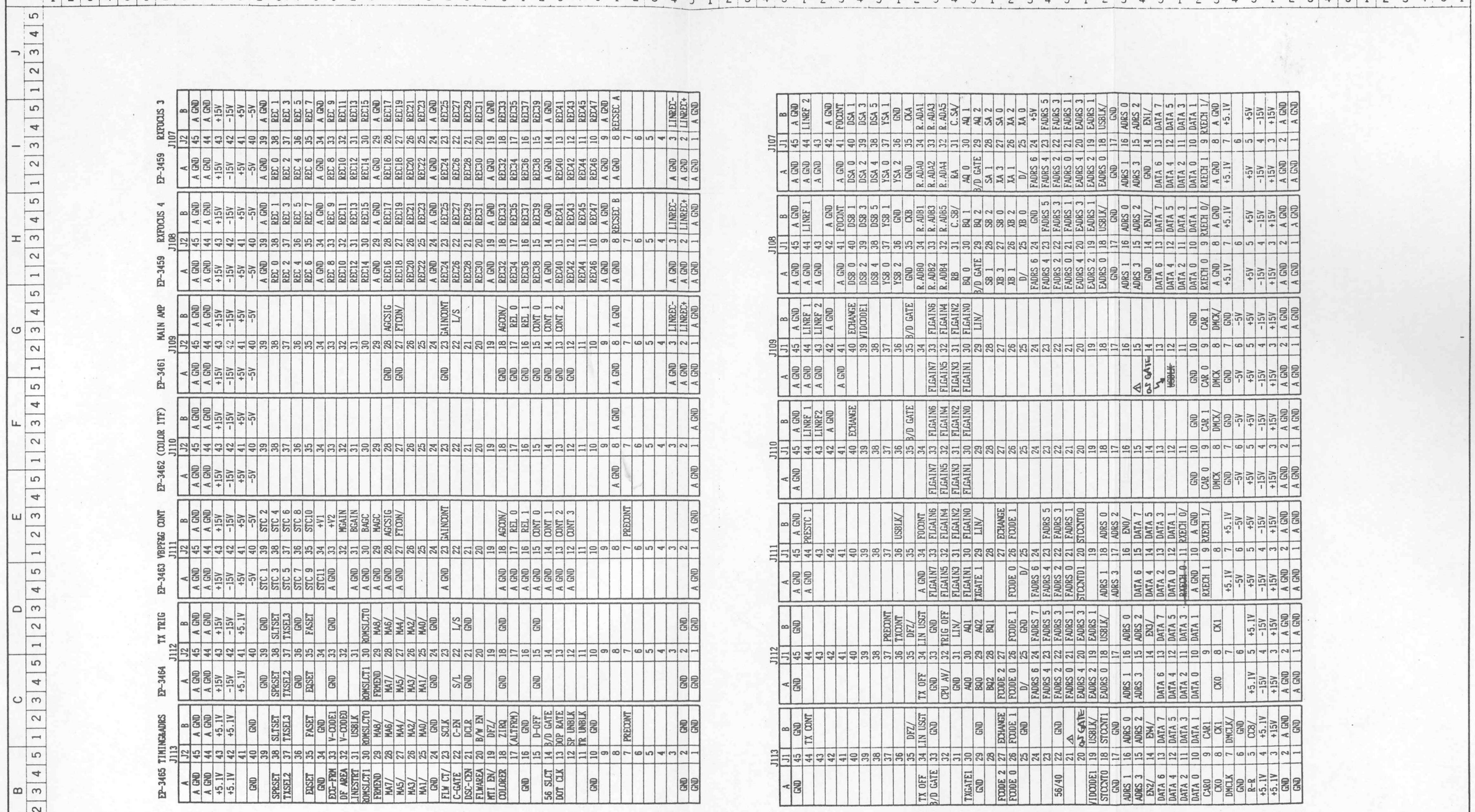

| EP-3465 TIMING&ADRS J113 | | | EP-3464 TX TRIG J112 | | | EP-3463 VBPF&G CONT J111 | | | EP-3462 (COLOR ITF) J110 | | | EP-3461 MAIN AMP J109 | | | EP-3459 RXFOCUS 4 J108 | | | EP-3459 RXFOCUS 3 J107 | | |
|---|---|---|---|---|---|---|---|---|---|---|---|---|---|---|---|---|---|---|---|---|
| A | J2 | B | A | J2 | B | A | J2 | B | A | J2 | B | A | J2 | B | A | J2 | B | A | J2 | B |
| A GND | 45 | A GND | A GND | 45 | A GND | A GND | 45 | A GND | A GND | 45 | A GND | A GND | 45 | A GND | A GND | 45 | A GND | A GND | 45 | A GND |
| A GND | 44 | A GND | A GND | 44 | A GND | A GND | 44 | A GND | A GND | 44 | A GND | A GND | 44 | A GND | A GND | 44 | A GND | A GND | 44 | A GND |
| +5.1V | 43 | +5.1V | +15V | 43 | +15V | +15V | 43 | +15V | +15V | 43 | +15V | +15V | 43 | +15V | +15V | 43 | +15V | +15V | 43 | +15V |
| +5.1V | 42 | +5.1V | -15V | 42 | -15V | -15V | 42 | -15V | -15V | 42 | -15V | -15V | 42 | -15V | -15V | 42 | -15V | -15V | 42 | -15V |
| | 41 | | +5.1V | 41 | +5.1V | +5V | 41 | +5V | +5V | 41 | +5V | +5V | 41 | +5V | +5V | 41 | +5V | +5V | 41 | +5V |
| GND | 40 | GND | | 40 | | -5V | 40 | -5V | -5V | 40 | -5V | -5V | 40 | -5V | -5V | 40 | -5V | -5V | 40 | -5V |
| | 39 | | GND | 39 | GND | STC 1 | 39 | STC 2 | | 39 | | | 39 | | A GND | 39 | A GND | A GND | 39 | A GND |
| SPRSET | 38 | SLTSET | SPRSET | 38 | SLTSET | STC 3 | 38 | STC 4 | | 38 | | | 38 | | REC 0 | 38 | REC 1 | REC 0 | 38 | REC 1 |
| TXSEL2 | 37 | TXSEL3 | TXSEL2 | 37 | TXSEL3 | STC 5 | 37 | STC 6 | | 37 | | | 37 | | REC 2 | 37 | REC 3 | REC 2 | 37 | REC 3 |
| | 36 | | GND | 36 | GND | STC 7 | 36 | STC 8 | | 36 | | | 36 | | REC 4 | 36 | REC 5 | REC 4 | 36 | REC 5 |
| EQSET | 35 | FASET | EQSET | 35 | FASET | STC 9 | 35 | STC10 | | 35 | | | 35 | | REC 6 | 35 | REC 7 | REC 6 | 35 | REC 7 |
| GND | 34 | GND | | 34 | | STC11 | 34 | +V1 | | 34 | | | 34 | | A GND | 34 | A GND | A GND | 34 | A GND |
| ECG-FRM | 33 | V-CODE1 | GND | 33 | GND | A GND | 33 | +V2 | | 33 | | | 33 | | REC 8 | 33 | REC 9 | REC 8 | 33 | REC 9 |
| DF AREA | 32 | V-CODE0 | | 32 | | | 32 | MGAIN | | 32 | | | 32 | | REC10 | 32 | REC11 | REC10 | 32 | REC11 |
| LINESTRT | 31 | USBLK | | 31 | | A GND | 31 | BGAIN | | 31 | | | 31 | | REC12 | 31 | REC13 | REC12 | 31 | REC13 |
| ROMSLCT1 | 30 | ROMSLCT0 | ROMSLCT1 | 30 | ROMSLCT0 | A GND | 30 | BAGC | | 30 | | | 30 | | REC14 | 30 | REC15 | REC14 | 30 | REC15 |
| FRMEND | 29 | MA8/ | FRMEND | 29 | MA8/ | A GND | 29 | MAGC | | 29 | | | 29 | | A GND | 29 | A GND | A GND | 29 | A GND |
| MA7/ | 28 | MA6/ | MA7/ | 28 | MA6/ | A GND | 28 | AGCSIG | | 28 | | GND | 28 | AGCSIG | REC16 | 28 | REC17 | REC16 | 28 | REC17 |
| MA5/ | 27 | MA4/ | MA5/ | 27 | MA4/ | A GND | 27 | FTCON/ | | 27 | | GND | 27 | FTCON/ | REC18 | 27 | REC19 | REC18 | 27 | REC19 |
| MA3/ | 26 | MA2/ | MA3/ | 26 | MA2/ | | 26 | | | 26 | | | 26 | | REC20 | 26 | REC21 | REC20 | 26 | REC21 |
| MA1/ | 25 | MA0/ | MA1/ | 25 | MA0/ | | 25 | | | 25 | | | 25 | | REC22 | 25 | REC23 | REC22 | 25 | REC23 |
| GND | 24 | GND | GND | 24 | GND | | 24 | | | 24 | | | 24 | | A GND | 24 | A GND | A GND | 24 | A GND |
| FLW CT/ | 23 | SCLK | | 23 | | A GND | 23 | GAINCONT | | 23 | | GND | 23 | GAINCONT | REC24 | 23 | REC25 | REC24 | 23 | REC25 |
| C-GATE | 22 | C-EN | S/L | 22 | L/S | | 22 | | | 22 | | | 22 | L/S | REC26 | 22 | REC27 | REC26 | 22 | REC27 |
| DSC-CEN | 21 | DCLR | GND | 21 | GND | | 21 | | | 21 | | | 21 | | REC28 | 21 | REC29 | REC28 | 21 | REC29 |
| FLWAREA | 20 | B/W EN | | 20 | | | 20 | | | 20 | | | 20 | | REC30 | 20 | REC31 | REC30 | 20 | REC31 |
| MTI EN/ | 19 | DFZ/ | | 19 | | | 19 | | | 19 | | | 19 | | A GND | 19 | A GND | A GND | 19 | A GND |
| COLORER | 18 | ZIRQ | GND | 18 | GND | A GND | 18 | AGCON/ | | 18 | | GND | 18 | AGCON/ | REC32 | 18 | REC33 | REC32 | 18 | REC33 |
| | 17 | (ALTFRM) | | 17 | | A GND | 17 | REL 0 | | 17 | | GND | 17 | REL 0 | REC34 | 17 | REC35 | REC34 | 17 | REC35 |
| GND | 16 | GND | | 16 | | A GND | 16 | REL 1 | | 16 | | GND | 16 | REL 1 | REC36 | 16 | REC37 | REC36 | 16 | REC37 |
| | 15 | D-OFF | GND | 15 | GND | A GND | 15 | CONT 0 | | 15 | | GND | 15 | CONT 0 | REC38 | 15 | REC39 | REC38 | 15 | REC39 |
| 56 SLCT | 14 | B/D GATE | | 14 | | A GND | 14 | CONT 1 | | 14 | | GND | 14 | CONT 1 | A GND | 14 | A GND | A GND | 14 | A GND |
| DOT CLK | 13 | DOP RATE | | 13 | | A GND | 13 | CONT 2 | | 13 | | GND | 13 | CONT 2 | REC40 | 13 | REC41 | REC40 | 13 | REC41 |
| | 12 | SP UNBLK | | 12 | | A GND | 12 | CONT 3 | | 12 | | GND | 12 | | REC42 | 12 | REC43 | REC42 | 12 | REC43 |
| | 11 | TR UNBLK | | 11 | | | 11 | | | 11 | | | 11 | | REC44 | 11 | REC45 | REC44 | 11 | REC45 |
| GND | 10 | GND | | 10 | | | 10 | | | 10 | | | 10 | | REC46 | 10 | REC47 | REC46 | 10 | REC47 |
| | 9 | | | 9 | | | 9 | | | 9 | | | 9 | | A GND | 9 | A GND | A GND | 9 | A GND |
| | 8 | | | 8 | | | 8 | | A GND | 8 | A GND | A GND | 8 | A GND | A GND | 8 | RECSEC B | A GND | 8 | RECSEC A |
| | 7 | PRECONT | | 7 | | | 7 | PRECONT | | 7 | | | 7 | | | 7 | | | 7 | |
| | 6 | | | 6 | | | 6 | | | 6 | | | 6 | | | 6 | | | 6 | |
| | 5 | | | 5 | | | 5 | | | 5 | | | 5 | | | 5 | | | 5 | |
| | 4 | | | 4 | | | 4 | | | 4 | | | 4 | | | 4 | | | 4 | |
| | 3 | | | 3 | | | 3 | | | 3 | | A GND | 3 | LINREC- | A GND | 3 | LINREC- | A GND | 3 | LINREC- |
| GND | 2 | GND | GND | 2 | GND | | 2 | | | 2 | | A GND | 2 | LINREC+ | A GND | 2 | LINREC+ | A GND | 2 | LINREC+ |
| GND | 1 | GND | GND | 1 | GND | A GND | 1 | A GND | A GND | 1 | A GND | A GND | 1 | A GND | A GND | 1 | A GND | A GND | 1 | A GND |

| J113 | | | J112 | | | J111 | | | J110 | | | J109 | | | J108 | | | J107 | | |
|---|---|---|---|---|---|---|---|---|---|---|---|---|---|---|---|---|---|---|---|---|
| A | J1 | B | A | J1 | B | A | J1 | B | A | J1 | B | A | J1 | B | A | J1 | B | A | J1 | B |
| GND | 45 | GND | GND | 45 | GND | A GND | 45 | A GND | A GND | 45 | A GND | A GND | 45 | A GND | A GND | 45 | A GND | A GND | 45 | A GND |
| | 44 | TX CONT | | 44 | | A GND | 44 | PRESTC 1 | | 44 | LINRF 1 | A GND | 44 | LINRF 1 | A GND | 44 | LINRF 1 | A GND | 44 | LINRF 2 |
| | 43 | | | 43 | | | 43 | | | 43 | LINRF2 | A GND | 43 | LINRF 2 | A GND | 43 | | A GND | 43 | |
| | 42 | | | 42 | | | 42 | | | 42 | A GND | | 42 | A GND | | 42 | A GND | | 42 | A GND |
| | 41 | | | 41 | | | 41 | | | 41 | | A GND | 41 | | A GND | 41 | FOCONT | A GND | 41 | FOCONT |
| | 40 | | | 40 | | | 40 | | | 40 | ECHANGE | | 40 | ECHANGE | DSB 0 | 40 | DSB 1 | DSA 0 | 40 | DSA 1 |
| | 39 | | | 39 | | | 39 | | | 39 | | | 39 | VIDCODE1 | DSB 2 | 39 | DSB 3 | DSA 2 | 39 | DSA 3 |
| | 38 | | | 38 | | | 38 | | | 38 | | | 38 | | DSB 4 | 38 | DSB 5 | DSA 4 | 38 | DSA 5 |
| | 37 | | | 37 | PRECONT | | 37 | | | 37 | | | 37 | | YSB 0 | 37 | YSB 1 | YSA 0 | 37 | YSA 1 |
| | 36 | | | 36 | TXCONT | | 36 | USBLK/ | | 36 | | | 36 | | YSB 2 | 36 | GND | YSA 2 | 36 | GND |
| | 35 | DFZ/ | | 35 | DFZ/ | | 35 | | | 35 | B/D GATE | | 35 | B/D GATE | GND | 35 | CKB | GND | 35 | CKA |
| TX OFF | 34 | LIN USGT | TX OFF | 34 | LIN USGT | A GND | 34 | FOCONT | | 34 | | | 34 | | R.ADB0 | 34 | R.ADB1 | R.ADA0 | 34 | R.ADA1 |
| B/D GATE | 33 | GND | GND | 33 | GND | FLGAIN7 | 33 | FLGAIN6 | FLGAIN7 | 33 | FLGAIN6 | FLGAIN7 | 33 | FLGAIN6 | R.ADB2 | 33 | R.ADB3 | R.ADA2 | 33 | R.ADA3 |
| | 32 | | CPU AV/ | 32 | TRIG OFF | FLGAIN5 | 32 | FLGAIN4 | FLGAIN5 | 32 | FLGAIN4 | FLGAIN5 | 32 | FLGAIN4 | R.ADB4 | 32 | R.ADB5 | R.ADA4 | 32 | R.ADA5 |
| | 31 | | GND | 31 | LIN/ | FLGAIN3 | 31 | FLGAIN2 | FLGAIN3 | 31 | FLGAIN2 | FLGAIN3 | 31 | FLGAIN2 | RB | 31 | C.SB/ | RA | 31 | C.SA/ |
| TXGATE1 | 30 | | AQ0 | 30 | AQ1 | FLGAIN1 | 30 | FLGAIN0 | FLGAIN1 | 30 | FLGAIN0 | FLGAIN1 | 30 | FLGAIN0 | BQ 0 | 30 | BQ 1 | AQ 0 | 30 | AQ 1 |
| GND | 29 | GND | BQ0 | 29 | AQ2 | TXGATE 1 | 29 | LIN/ | | 29 | | | 29 | LIN/ | B/D GATE | 29 | BQ 2 | B/D GATE | 29 | AQ 2 |
| | 28 | | BQ2 | 28 | BQ1 | | 28 | | | 28 | | | 28 | | SB 1 | 28 | SB 2 | SA 1 | 28 | SA 2 |
| FCODE 2 | 27 | ECHANGE | FCODE 2 | 27 | | | 27 | ECHANGE | | 27 | | | 27 | | XB 3 | 27 | SB 0 | XA 3 | 27 | SA 0 |
| FCODE 0 | 26 | FCODE 1 | FCODE 0 | 26 | FCODE 1 | FCODE 0 | 26 | FCODE 1 | FCODE 0 | 26 | FCODE 1 | | 26 | | XB 1 | 26 | XB 2 | XA 1 | 26 | XA 2 |
| | 25 | GND | D/ | 25 | GND | D/ | 25 | | | 25 | | | 25 | | D/ | 25 | XB 0 | D/ | 25 | XA 0 |
| | 24 | | FADRS 6 | 24 | FADRS 7 | FADRS 6 | 24 | | | 24 | | | 24 | | FADRS 6 | 24 | GND | FADRS 6 | 24 | +5V |
| | 23 | | FADRS 4 | 23 | FADRS 5 | FADRS 4 | 23 | FADRS 5 | | 23 | | | 23 | | FADRS 4 | 23 | FADRS 5 | FADRS 4 | 23 | FADRS 5 |
| 56/40 | 22 | GND | FADRS 2 | 22 | FADRS 3 | FADRS 2 | 22 | FADRS 3 | | 22 | | | 22 | | FADRS 2 | 22 | FADRS 3 | FADRS 2 | 22 | FADRS 3 |
| | 21 | △ | FADRS 0 | 21 | FADRS 1 | FADRS 0 | 21 | FADRS 1 | | 21 | | | 21 | | FADRS 0 | 21 | FADRS 1 | FADRS 0 | 21 | FADRS 1 |
| | 20 | ~~GATE~~ | EADRS 4 | 20 | EADRS 3 | STCCNTD1 | 20 | STCCNTD0 | | 20 | | | 20 | | EADRS 4 | 20 | EADRS 3 | EADRS 4 | 20 | EADRS 3 |
| VIDCODE1 | 19 | USBLK/ | EADRS 2 | 19 | EADRS 1 | | 19 | | | 19 | | | 19 | | EADRS 2 | 19 | EADRS 1 | EADRS 2 | 19 | EADRS 1 |
| STCCNT0 | 18 | STCCNT1 | EADRS 0 | 18 | USBLK/ | ADRS 1 | 18 | ADRS 0 | | 18 | | | 18 | | EADRS 0 | 18 | USBLK/ | EADRS 0 | 18 | USBLK/ |
| GND | 17 | GND | | 17 | | ADRS 3 | 17 | ADRS 2 | | 17 | | | 17 | | GND | 17 | GND | GND | 17 | GND |
| ADRS 1 | 16 | ADRS 0 | ADRS 1 | 16 | ADRS 0 | | 16 | EN0/ | | 16 | | | 16 | | ADRS 1 | 16 | ADRS 0 | ADRS 1 | 16 | ADRS 0 |
| ADRS 3 | 15 | ADRS 2 | ADRS 3 | 15 | ADRS 2 | DATA 6 | 15 | DATA 7 | | 15 | | △ | 15 | | ADRS 3 | 15 | ADRS 2 | ADRS 3 | 15 | ADRS 2 |
| EN2/ | 14 | EN4/ | | 14 | EN3/ | DATA 4 | 14 | DATA 5 | | 14 | | ~~GATE~~ | 14 | | GND | 14 | EN1/ | GND | 14 | EN1/ |
| DATA 6 | 13 | DATA 7 | DATA 6 | 13 | DATA 7 | DATA 2 | 13 | DATA 3 | | 13 | | | 13 | | DATA 6 | 13 | DATA 7 | DATA 6 | 13 | DATA 7 |
| DATA 4 | 12 | DATA 5 | DATA 4 | 12 | DATA 5 | DATA 0 | 12 | DATA 1 | | 12 | | ~~USBLK~~ | 12 | | DATA 4 | 12 | DATA 5 | DATA 4 | 12 | DATA 5 |
| DATA 2 | 11 | DATA 3 | DATA 2 | 11 | DATA 3 | ~~RXECH 0~~ | 11 | RXECH 0/ | | 11 | | | 11 | | DATA 2 | 11 | DATA 3 | DATA 2 | 11 | DATA 3 |
| DATA 0 | 10 | DATA 1 | DATA 0 | 10 | DATA 1 | A GND | 10 | A GND | GND | 10 | GND | GND | 10 | GND | DATA 0 | 10 | DATA 1 | DATA 0 | 10 | DATA 1 |
| CAR0 | 9 | CAR1 | | 9 | | RXECH 1 | 9 | RXECH 1/ | CAR 0 | 9 | CAR 1 | CAR 0 | 9 | CAR 1 | RXECH 0 | 9 | RXECH 0/ | RXECH 1 | 9 | RXECH 1/ |
| CK0 | 8 | CK1 | CK0 | 8 | CK1 | | 8 | | DMCK | 8 | DMCK/ | DMCK | 8 | DMCK/ | A GND | 8 | A GND | A GND | 8 | A GND |
| DMCLK | 7 | DMCLK/ | | 7 | | +5.1V | 7 | +5.1V | GND | 7 | GND | GND | 7 | GND | +5.1V | 7 | +5.1V | +5.1V | 7 | +5.1V |
| GND | 6 | GND | | 6 | | -5V | 6 | -5V | -5V | 6 | -5V | -5V | 6 | -5V | | 6 | | | 6 | |
| R-R | 5 | CC8/ | +5.1V | 5 | +5.1V | +5V | 5 | +5V | +5V | 5 | +5V | +5V | 5 | +5V | +5V | 5 | +5V | +5V | 5 | +5V |
| +5.1V | 4 | +5.1V | -15V | 4 | -15V | -15V | 4 | -15V | -15V | 4 | -15V | -15V | 4 | -15V | -15V | 4 | -15V | -15V | 4 | -15V |
| +5.1V | 3 | +15V | +15V | 3 | +15V | +15V | 3 | +15V | +15V | 3 | +15V | +15V | 3 | +15V | +15V | 3 | +15V | +15V | 3 | +15V |
| GND | 2 | A GND | A GND | 2 | A GND | A GND | 2 | A GND | A GND | 2 | A GND | A GND | 2 | A GND | A GND | 2 | A GND | A GND | 2 | A GND |
| GND | 1 | GND | A GND | 1 | A GND | A GND | 1 | A GND | A GND | 1 | A GND | A GND | 1 | A GND | A GND | 1 | A GND | A GND | 1 | A GND |

REVISIONS変更

△ 不具合対策
作指 1枚-M2197

7-71

| Aloka | TITLE名称 Tx Rx unit MOTHER BOARD | MODEL形名 EP-3466B | 2/16 |
|---|---|---|---|
| 3RD ANGLE PROJECTION 第3角法 | DRAWN製図 企画G '92.9.10 近藤 / DESIGNED設計 企画G '92.9.10 近藤 / CHECKED検図 企画G 92.9.10 [illegible] / APPD承認 1枚 '92.9.10 入江 | DRAWING NO.図番 MC 325923 | |
| SCALE尺度 | | | |
| UNITS単位 mm | | | |

L-013-10-82-A3

REVISIONS変更

J121

| | | | |
|---|---|---|---|
| +15V | 1 | 2 | |
| STC 1 | 3 | 4 | STC 2 |
| STC 3 | 5 | 6 | STC 4 |
| STC 5 | 7 | 8 | STC 6 |
| STC 7 | 9 | 10 | STC 8 |
| STC 9 | 11 | 12 | STC10 |
| STC11 | 13 | 14 | |
| +V1 | 15 | 16 | +V1 |
| +V2 | 17 | 18 | +V2 |
| A GND | 19 | 20 | MGAIN |
| A GND | 21 | 22 | BGAIN |
| A GND | 23 | 24 | BAGC |
| -5V | 25 | 26 | MAGC |

J122

| | | | |
|---|---|---|---|
| +5.1V | 1 | 2 | +5.1V |
| R-R | 3 | 4 | CC8/ |
| GND | 5 | 6 | GND |
| DATA 0 | 7 | 8 | DATA 1 |
| DATA 2 | 9 | 10 | DATA 3 |
| DATA 4 | 11 | 12 | DATA 5 |
| DATA 6 | 13 | 14 | DATA 7 |
| EN2/ | 15 | 16 | EN4/ |
| EN0/ | 17 | 18 | EN1/ |
| CPUAV/ | 19 | 20 | TRIG OFF |
| ADRS 3 | 21 | 22 | ADRS 2 |
| ADRS 1 | 23 | 24 | ADRS 0 |
| GND | 25 | 26 | GND |

J123

| | | | |
|---|---|---|---|
| GND | 1 | 2 | GND |
| | 3 | 4 | TR UNBLK |
| | 5 | 6 | SP UNBLK |
| DOT CLK | 7 | 8 | DOP RATE |
| 56 SLCT | 9 | 10 | B/D GATE |
| EN3/ | 11 | 12 | D-OFF |
| GND | 13 | 14 | GND |
| | 15 | 16 | |
| COLORER | 17 | 18 | ZIRQ |
| MTI EN/ | 19 | 20 | DFZ/ |
| FLWAREA | 21 | 22 | B/W EN |
| DSC-CEN | 23 | 24 | DCLR |
| C-GATE | 25 | 26 | C-EN |
| FLW CT/ | 27 | 28 | SCLK |
| GND | 29 | 30 | GND |
| MA1/ | 31 | 32 | MA0/ |
| MA3/ | 33 | 34 | MA2/ |
| MA5/ | 35 | 36 | MA4/ |
| MA7/ | 37 | 38 | MA6/ |
| FRMEND | 39 | 40 | MA8/ |
| RMSLCT1 | 41 | 42 | RMSLCT0 |
| LINESTRT | 43 | 44 | USBLK |
| DF AREA | 45 | 46 | V-CODE0 |
| ECG-FRM | 47 | 48 | V-CODE1 |
| GND | 49 | 50 | GND |

J131

| | | | |
|---|---|---|---|
| HV | 1 | 2 | A GND |

J91

| | | | |
|---|---|---|---|
| 56/40 | 1 | 2 | GND |

MSS

J132

| | | | |
|---|---|---|---|
| +15V | 1 | 2 | A GND |
| -15V | 3 | 4 | +5.1V |
| +5V | 5 | 6 | |
| +5.1V | 7 | 8 | +5V |
| -5V | 9 | 10 | GND |
| A GND | 11 | 12 | A GND |
| GND | 13 | 14 | A GND |
| A GND | 15 | | |

J180

| | | | |
|---|---|---|---|
| A GND | 1 | 2 | A GND |
| TX112 | 3 | 4 | TX104 |
| TX 64 | 5 | 6 | TX 56 |
| TX 16 | 7 | 8 | TX 8 |
| TX111 | 9 | 10 | TX103 |
| TX 63 | 11 | 12 | TX 55 |
| TX 15 | 13 | 14 | TX 7 |
| TX110 | 15 | 16 | TX102 |
| TX 62 | 17 | 18 | TX 54 |
| TX 14 | 19 | 20 | TX 6 |
| TX109 | 21 | 22 | TX101 |
| TX 61 | 23 | 24 | TX 53 |
| TX 13 | 25 | 26 | TX 5 |
| A GND | 27 | 28 | A GND |
| A GND | 29 | 30 | A GND |
| TX108 | 31 | 32 | TX100 |
| TX 60 | 33 | 34 | TX 52 |
| TX 12 | 35 | 36 | TX 4 |
| TX107 | 37 | 38 | TX 99 |
| TX 59 | 39 | 40 | TX 51 |
| TX 11 | 41 | 42 | TX 3 |
| TX106 | 43 | 44 | TX 98 |
| TX 58 | 45 | 46 | TX 50 |
| TX 10 | 47 | 48 | TX 2 |
| TX105 | 49 | 50 | TX 97 |
| TX 57 | 51 | 52 | TX 49 |
| TX 9 | 53 | 54 | TX 1 |
| A GND | 55 | 56 | A GND |

J181

| | | | |
|---|---|---|---|
| TX 90 | 1 | 2 | |
| TX 42 | 3 | 4 | |
| TX 89 | 5 | 6 | TX118 |
| TX 41 | 7 | 8 | TX 70 |
| A GND | 9 | 10 | TX 22 |
| TX 80 | 11 | 12 | TX117 |
| TX 32 | 13 | 14 | TX 69 |
| TX 79 | 15 | 16 | TX 21 |
| TX 31 | 17 | 18 | A GND |
| TX 78 | 19 | 20 | A GND |
| TX 30 | 21 | 22 | TX116 |
| TX 77 | 23 | 24 | TX 68 |
| TX 29 | 25 | 26 | TX 20 |
| A GND | 27 | 28 | TX115 |
| TX 76 | 29 | 30 | TX 67 |
| TX 28 | 31 | 32 | TX 19 |
| TX 75 | 33 | 34 | TX114 |
| TX 27 | 35 | 36 | TX 66 |
| TX 74 | 37 | 38 | TX 18 |
| TX 26 | 39 | 40 | TX113 |
| TX 73 | 41 | 42 | TX 65 |
| TX 25 | 43 | 44 | TX 17 |
| A GND | 45 | 46 | A GND |

J182

| | | | |
|---|---|---|---|
| | 1 | 2 | TX 87 |
| | 3 | 4 | TX 39 |
| TX 88 | 5 | 6 | TX 85 |
| TX 40 | 7 | 8 | TX 37 |
| TX 86 | 9 | 10 | A GND |
| TX 38 | 11 | 12 | TX 84 |
| A GND | 13 | 14 | TX 36 |
| TX 96 | 15 | 16 | TX 83 |
| TX 48 | 17 | 18 | TX 35 |
| TX 95 | 19 | 20 | TX 82 |
| TX 47 | 21 | 22 | TX 34 |
| TX 94 | 23 | 24 | TX 81 |
| TX 46 | 25 | 26 | TX 33 |
| TX 93 | 27 | 28 | A GND |
| TX 45 | 29 | 30 | TX120 |
| A GND | 31 | 32 | TX 72 |
| TX 92 | 33 | 34 | TX 24 |
| TX 44 | 35 | 36 | TX119 |
| TX 91 | 37 | 38 | TX 71 |
| TX 43 | 39 | 40 | TX 23 |
| A GND | 41 | 42 | A GND |

J183

| | | | |
|---|---|---|---|
| +5VA | 1 | 2 | +5VA |
| A1 GND | 3 | 4 | PRB1/2 |
| PCD101 | 5 | 6 | PCD102 |
| PCD103 | 7 | 8 | PCD104 |
| PCD105 | 9 | 10 | PCD106 |
| PCD107 | 11 | 12 | PCD108 |
| PCD201 | 13 | 14 | PCD202 |
| PCD203 | 15 | 16 | PCD204 |
| PCD205 | 17 | 18 | PCD206 |
| PCD207 | 19 | 20 | PCD208 |
| PC301 | 21 | 22 | PCD302 |
| PC303 | 23 | 24 | B1/2 |
| PCD306 | 25 | 26 | C |
| LON/OFF | 27 | 28 | A1 GND |
| A1 GND | 29 | 30 | A1 GND |
| PCD301 | 31 | 32 | PCD302 |
| PCD303 | 33 | 34 | PCD304 |
| PCD305 | 35 | 36 | PCD401 |
| PCD402 | 37 | 38 | PCD403 |
| PCD404 | 39 | 40 | PCD405 |
| PCD406 | 41 | 42 | PCD407 |
| PCD408 | 43 | 44 | PS 1 |
| PS 2 | 45 | 46 | PRB3/4 |
| PCD307 | 47 | 48 | PCD308 |
| +5VA | 49 | 50 | A1 GND |

J184

| | | | |
|---|---|---|---|
| A1 GND | 1 | 2 | A1 GND |
| C | 3 | 4 | LON/OFF |
| PCD302 | 5 | 6 | PCD301 |
| PCD304 | 7 | 8 | PCD303 |
| PCD306 | 9 | 10 | PCD305 |
| PCD308 | 11 | 12 | PCD307 |
| PCD401 | 13 | 14 | PCD402 |
| PCD403 | 15 | 16 | PCD404 |
| PCD405 | 17 | 18 | PCD406 |
| PCD407 | 19 | 20 | PCD408 |
| PRB3/4 | 21 | 22 | PS 2 |
| D/ | 23 | 24 | B1/2 |
| A1 GND | 25 | 26 | +5VA |

J185

| | | | |
|---|---|---|---|
| A GND | 1 | 2 | A GND |
| REC46 | 3 | 4 | REC47 |
| REC44 | 5 | 6 | REC45 |
| REC42 | 7 | 8 | REC43 |
| REC40 | 9 | 10 | REC41 |
| A GND | 11 | 12 | A GND |
| REC38 | 13 | 14 | REC39 |
| REC36 | 15 | 16 | REC37 |
| REC34 | 17 | 18 | REC35 |
| REC32 | 19 | 20 | REC33 |
| A GND | 21 | 22 | A GND |
| REC30 | 23 | 24 | REC31 |

(65610-2-24)

J186

| | | | |
|---|---|---|---|
| A GND | 1 | 2 | A GND |
| REC 46 | 3 | 4 | REC 47 |
| REC 44 | 5 | 6 | REC 45 |
| REC 42 | 7 | 8 | REC 43 |
| REC 40 | 9 | 10 | REC 41 |
| A GND | 11 | 12 | A GND |
| REC 38 | 13 | 14 | REC 39 |
| REC 36 | 15 | 16 | REC 37 |
| REC 34 | 17 | 18 | REC 35 |
| REC 32 | 19 | 20 | REC 33 |
| A GND | 21 | 22 | A GND |
| REC 30 | 23 | 24 | REC 31 |

(65610-2-24)

J187

| | | | |
|---|---|---|---|
| +5.1V | 1 | 2 | GND |

J188

| | | | |
|---|---|---|---|
| +5.1V | 1 | 2 | GND |
| +5V | 3 | 4 | A GND |

J189

| | | | |
|---|---|---|---|
| GND | 1 | 2 | GND |
| +5V | 3 | 4 | +5V |
| | 5 | 6 | |
| FADRS0 | 7 | 8 | FADRS1 |
| FADRS2 | 9 | 10 | FADRS3 |
| FADRS4 | 11 | 12 | FADRS5 |
| FADRS6 | 13 | 14 | FADRS7 |
| L/S | 15 | 16 | USBLK/ |

J190

| | | | |
|---|---|---|---|
| SEL 0 | 1 | 2 | SEL 1 |
| SEL 2 | 3 | 4 | SEL 3 |
| SEL 4 | 5 | 6 | SEL 5 |
| SEL 6 | 7 | 8 | SEL 7 |
| SLCK 0 | 9 | 10 | SLCK 1 |
| SLCK 2 | 11 | 12 | SLCK 3 |
| SLCK 4 | 13 | 14 | SLCK 5 |
| SLCK 6 | 15 | 16 | SLCK 7 |
| SLCK 8 | 17 | 18 | SLCK 9 |
| SLCK10 | 19 | 20 | SLCK11 |
| SLCK12 | 21 | 22 | SLCK13 |
| SLCK14 | 23 | 24 | SLCK15 |
| SLCK16 | 25 | 26 | SLCK17 |
| SLCK18 | 27 | 28 | SLCK19 |
| SLCK20 | 29 | 30 | SLCK21 |
| SLCK22 | 31 | 32 | SLCK23 |
| | 33 | 34 | |
| | 35 | 36 | |
| | 37 | 38 | |
| | 39 | 40 | |

UNITS 単位 mm

SCALE 尺度

3RD ANGLE PROJECTION 第3角法

DRAWN 製図 近藤 92.5.10

DESIGNED 設計 近藤 92.5.10

CHECKED 検図 92.5.10

APPD 承認 92.5.10

TITLE 名称 Tx Rx unit

MOTHER BOARD

MODEL 形名 EP-3466B

DRAWING NO. 図番 MC 325924

3/16

| NO.1 | EP-3452 | EP-3455 | EP-3456 | EP-3457 | EP-3458 | EP-3460 | EP-3460 | EP-3459 | EP-3459 | EP-3461 | EP-3462 | EP-3463 | EP-3464 | EP-3465 | J180 | J183 | J186 | J121 | J131 | J189 |
|---|---|---|---|---|---|---|---|---|---|---|---|---|---|---|---|---|---|---|---|---|
| | PROBE CH | SELECTOR | TX 1 | TX 2 | PREAMP | RX FOCUS1 | RX FOCUS2 | RX FOCUS3 | RX FOCUS4 | AMP&C ITF | COLOR ITF | VBPF&GCONT | TX TRIG | ADR&TIM | J181 | J184 | J187 | J122 | | J190 |
| SIG | J-100 | J-101 | J-102 | J-103 | J-104 | J-105 | J-106 | J-107 | J-108 | J-109 | J-110 | J-111 | J-112 | J-113 | J182 | J185 | J188 | J123 | J132 | J191 |
| A GND | | 1A1 1B1 | 1A1 1B1 | 1A1 1B1 | 1A1 1B1 | 1A1 1B1 | 1A1 1B1 | 1A1 1B1 | 1A1 1B1 | 1A1 1B1 | 1A1 1B1 | 1A1 1B1 | 1A1 1B1 | 1B2 | 1 9 10 | 1 | 1 4 19 | | 2 2 1 | |
| A GND | | 1A2 1B2 | 1A2 1B2 | 1A2 1B2 | 1A2 1B2 | 1A2 1B2 | 1A2 1B2 | 1A2 1B2 | 1A2 1B2 | 1A2 1B2 | 1A2 1B2 | 1A2 1B2 | 1A2 1B2 | | 2 18 13 | 2 | 2 21 | | 11 2 | |
| A GND | 1A14 1B14 | 1A32 1B32 | 1A14 1A15 | 1A22 1A23 | 1A9 | 1A41 1B41 | 1A41 1B41 | 1A8 1B8 | 1A8 1B8 | 1A41 1A43 | 1B42 | 1A10 1B10 | 2A44 2B44 | | 27 20 28 | 11 | 23 | | 12 | |
| A GND | 1A17 1B17 | 1A33 1B45 | 1A16 1A17 | 1A24 1A25 | 1A33 1B33 | 1A42 1B42 | 1A42 1B42 | 1A41 1B42 | 1A41 1B42 | 1A44 1B42 | 1A45 1B45 | 1A34 1A44 | 2A45 2B45 | | 28 27 31 | 12 | | | 14 | |
| A GND | 1A22 1B22 | 1A34 2B1 | 1A18 1A19 | 1A26 1A27 | 1A38 1B38 | 1A43 1B43 | 1A43 1B43 | 1A43 1A44 | 1A43 1A44 | 1A45 1B45 | 2A1 2B1 | 1A45 1B45 | | | 29 45 41 | 21 | | | 15 | |
| A GND | 1A31 1B31 | 1A35 2B3 | 1A20 1A21 | 1A28 1A29 | 1A43 1B43 | 1A44 1B44 | 1A44 1B44 | 1A45 1B45 | 1A45 1B45 | 2A1 2B1 | 2A44 2B44 | 2A1 2B1 | | | 30 46 42 | 22 | | | | |
| A GND | 1A32 1B40 | 1A36 2B16 | 1A22 1A23 | 1A30 1A31 | 1A45 1B45 | 1A45 1B45 | 1A45 1B45 | 2A1 2B1 | 2A1 2B1 | 2A44 2B44 | 2A45 2B45 | 2A12 2A13 | | | 55 | | | | | |
| A GND | 1A45 1B45 | 1A37 2B29 | 1A24 1A25 | 1A32 1A33 | 2A1 2B1 | 2A1 2B1 | 2A1 2B1 | 2A8 | 2A8 | 2A45 2B45 | | 2A14 2A15 | | | 56 | | | | | |
| A GND | 2A1 2B1 | 1A38 2B42 | 1A26 1A27 | 1A34 1A35 | 2A20 2B20 | 2A8 | 2A8 | 2A9 2B9 | 2A9 2B9 | 2A8 2B8 | 2A8 2B8 | 2A16 2A17 | | | | | | | | |
| A GND | 2A3 2B7 | 1A39 2B44 | 1A28 1A29 | 1A36 1A37 | 2A24 2B24 | 2A9 2B9 | 2A9 2B9 | 2A14 2B14 | 2A14 2B14 | 2A2 | | 2A18 2A23 | | | | | | | | |
| A GND | 2A16 2B16 | 1A40 2B45 | 1A30 1A31 | 1A38 1A39 | 2A29 2B29 | 2A14 2B14 | 2A14 2B14 | 2A19 2B19 | 2A19 2B19 | 2A3 | | 2A27 2A28 | | | | | | | | |
| A GND | 2A29 2B29 | 1A41 | 1A32 1A33 | 1A40 1A41 | 2A34 3B34 | 2A19 2B19 | 2A19 2B19 | 2A24 2B24 | 2A24 2B24 | | | 2A29 2A30 | | | | | | | | |
| A GND | 2A42 2B42 | 1A42 2A1 | 1A34 1A35 | 1A42 1A43 | 2A39 2B39 | 2A24 2B24 | 2A24 2B24 | 2A29 2B29 | 2A29 2B29 | | | 2A31 2A33 | | | | | | | | |
| A GND | 2A44 2B44 | 1A43 2A3 | 1A36 1A37 | 1A44 1A45 | 2A40 2B40 | 2A29 2B29 | 2A29 2B29 | 2A34 2B34 | 2A34 2B34 | | | 2A44 2B44 | | | | | | | | |
| A GND | 2A45 2B45 | 1A44 2A4 | 1A38 1A39 | 1B45 | 2A44 2B44 | 2A34 2B34 | 2A34 2B34 | 2A39 2B39 | 2A39 2B39 | | | 2A45 2B45 | | | | | | | | |
| A GND | | 1A45 2A5 | 1A40 1A41 | 2A1 2B1 | 2A45 2B45 | 2A39 2B39 | 2A39 2B39 | 2A44 2B44 | 2A44 2B44 | | | | | | | | | | | |
| A GND | | 2A6 2A7 | 1A42 1A43 | 2A4 2A5 | | 2A44 2B44 | 2A44 2B44 | 2A45 2B45 | 2A45 2B45 | | | | | | | | | | | |
| A GND | | 2A8 2A9 | 1A44 1A45 | 2A6 2A7 | | 2A45 2B45 | 2A45 2B45 | 2A2 | 2A2 | | | | | | | | | | | |
| A GND | | 2A10 2A11 | 1B45 | 2A8 2A9 | | | | 2A3 | 2A3 | | | | | | | | | | | |
| A GND | | 2A12 2A13 | 2A1 2B1 | 2A10 2A11 | | | | | | | | | | | | | | | | |
| A GND | | 2A14 2A15 | 2A4 2A5 | 2A12 2A13 | | | | | | | | | | | | | | | | |
| A GND | | 2A16 2A17 | 2A6 2A7 | 2A14 2A15 | | | | | | | | | | | | | | | | |
| A GND | | 2A18 2A19 | 2A8 2A9 | 2A16 2A17 | | | | | | | | | | | | | | | | |
| A GND | | 2A20 2A21 | 2A10 2A11 | 2A18 2A19 | | | | | | | | | | | | | | | | |
| A GND | | 2A22 2A23 | 2A12 2A13 | 2A20 2A21 | | | | | | | | | | | | | | | | |
| A GND | | 2A24 2A25 | 2A14 2A15 | 2A22 2A23 | | | | | | | | | | | | | | | | |
| A GND | | 2A26 2A27 | 2A16 2A17 | 2A24 2A25 | | | | | | | | | | | | | | | | |
| A GND | | 2A28 2A29 | 2A18 2A19 | 2A26 2A27 | | | | | | | | | | | | | | | | |
| A GND | | 2A30 2A31 | 2A20 2A21 | 2A28 2A29 | | | | | | | | | | | | | | | | |
| A GND | | 2A32 2A33 | 2A22 2A23 | 2A30 2A31 | | | | | | | | | | | | | | | | |
| A GND | | 2A34 2A35 | 2A24 2A25 | 2A32 2A33 | | | | | | | | | | | | | | | | |
| A GND | | 2A36 2A37 | 2A26 2A27 | 2A34 2A35 | | | | | | | | | | | | | | | | |
| A GND | | 2A38 2A39 | 2A28 2A29 | 2A36 | | | | | | | | | | | | | | | | |
| A GND | | 2A40 2A41 | 2A30 2A31 | 2A40 2B40 | | | | | | | | | | | | | | | | |
| A GND | | 2A42 2A44 | 2A32 2A33 | 2A44 2B44 | | | | | | | | | | | | | | | | |
| A GND | | 2A45 | 2A34 2A35 | 2A45 2B45 | | | | | | | | | | | | | | | | |
| A GND | | | 2A36 | | | | | | | | | | | | | | | | | |
| A GND | | | 2A40 2B40 | | | | | | | | | | | | | | | | | |
| A GND | | | 2A44 2B44 | | | | | | | | | | | | | | | | | |
| A GND | | | 2A45 2B45 | | | | | | | | | | | | | | | | | |
| A1 GND | 1A1 1B1 | | | | | | | | | | | | | | | 3 1 | | | | |
| A1 GND | 1A2 1B2 | | | | | | | | | | | | | | | 28 2 | | | | |
| A1 GND | 1B13 | | | | | | | | | | | | | | | 29 25 | | | | |

7-73

REVISIONS 変更

Aloka

TITLE 名称 Tx Rx unit

MOTHER BOARD

MODEL 形名 EP-3466B

4/16

3RD ANGLE PROJECTION 第3角法

SCALE 尺度

UNITS 単位 mm

| DRAWN 製図 | DESIGNED 設計 | CHECKED 検図 | APPD 承認 |
|---|---|---|---|
| 企画G '92.9.10 近藤 | 企画G '92.9.10 近藤 | 企画G '92.9.10 [illegible] | 工務 '92.9.10 [illegible] |

DRAWING NO. 図番 MC 325925

| NO.2 | EP-3452 | EP-3455 | EP-3456 | EP-3457 | EP-3458 | EP-3460 | EP-3460 | EP-3459 | EP-3459 | EP-3461 | EP-3462 | EP-3463 | EP-3464 | EP-3465 | J180 | J183 | J186 | J121 | J131 | J189 |
|---|---|---|---|---|---|---|---|---|---|---|---|---|---|---|---|---|---|---|---|---|
| | PROBE CH | SELECTOR | TX 1 | TX 2 | PREAMP | RX FOCUS1 | RX FOCUS2 | RX FOCUS3 | RX FOCUS4 | AMP&C ITF | COLOR ITF | VBPF&GCONT | TX TRIG | ADR&TIM | J181 | J184 | J187 | J122 | | J190 |
| SIG | J-100 | J-101 | J-102 | J-103 | J-104 | J-105 | J-106 | J-107 | J-108 | J-109 | J-110 | J-111 | J-112 | J-113 | J182 | J185 | J188 | J123 | J132 | J191 |
| A1 GND | | | | | | | | | | | | | | | | 30 | | | | |
| A1 GND | | | | | | | | | | | | | | | | 50 | | | | |
| GND | | | | | | 1A14 | 1A14 | 1A14 | 1A14 | 1A7 1B7 | 1A7 1B7 | | 1A31 1B25 | 1A1 1B1 | | | 2 2 | 5 1 | 10 | 2 |
| GND | | | | | | 1A17 1B17 | 1A17 1B17 | 1A17 1B17 | 1A17 1B17 | 1A10 1B10 | 1A10 1B10 | | 1A33 1B33 | 1A2 | | | | 6 2 | 13 | |
| GND | | | | | | | 1B24 | | 1B24 | 2A13 2A14 | | | 1A45 1B45 | 1A6 1B6 | | | | 25 13 | | |
| GND | | | | | | 1A35 1B36 | 1A35 1B36 | 1A35 1B36 | 1A35 1B36 | 2A15 2A16 | | | 2A1 2B1 | 1A17 1B17 | | | | 26 14 | | |
| GND | | | | | | | | | | 2A17 2A18 | | | 2A2 2B2 | 1B25 | | | | 29 | | |
| GND | | | | | | | | | | 2A23 2A27 | | | 2A15 2B15 | 1A29 1B29 | | | | 30 | | |
| GND | | | | | | | | | | 2A28 2A12 | | | 2A18 2B18 | 1B33 | | | | 49 | | |
| GND | | | | | | | | | | | | | 2A21 2B21 | 1A45 1B45 | | | | 50 | | |
| GND | | | | | | | | | | | | | 2A24 2B24 | 2A1 2B1 | | | | | | |
| GND | | | | | | | | | | | | | 2A33 2B33 | 2A2 2B2 | | | | | | |
| GND | | | | | | | | | | | | | 2A36 2B36 | 2A10 2B10 | | | | | | |
| GND | | | | | | | | | | | | | 2A39 2B39 | 2A16 2B16 | | | | | | |
| GND | | | | | | | | | | | | | | 2A24 2B24 | | | | | | |
| GND | | | | | | | | | | | | | | | | | | | | |
| GND | | | | | | | | | | | | | | 2A34 2B34 | | | | | | |
| GND | | | | | | | | | | | | | | 2A40 2B40 | | | | | | |
| GND | | | | | | | | | | | | | | 2A44 2B44 | | | | | | |
| GND | | | | | | | | | | | | | | 2A45 2B45 | | | | | | |
| +5V | | 1A3 1B3 | 1A5 1B5 | 1A5 1B5 | 1A5 1B5 | 1A5 1B5 | 1A5 1B5 | 1A5 1B5 | 1A5 1B5 | 1A5 1B5 | 1A5 1B5 | 1A5 1B5 | | | | | 3 | | 5 3 | |
| +5V | 1A15 1B15 | 2A43 2B43 | 2A42 2B42 | 2A42 2B42 | 2A42 2B42 | 1B24 | 2A41 2B41 | 1B24 | 2A41 2B41 | 2A41 2B41 | 2A41 2B41 | 2A41 2B41 | | | | | | | 8 4 | |
| +5V | | | | | | 2A41 2B41 | | 2A41 2B41 | | | | | | | | | | | | |
| +5VA | 1A13 | | | | | | | | | | | | | | | 1 26 | | | | |
| +5VA | | | | | | | | | | | | | | | | 2 | | | | |
| +5VA | | | | | | | | | | | | | | | | 49 | | | | |
| +5.1V | 1A16 1B16 | | | | | 1A7 1B7 | 1A7 1B7 | 1A7 1B7 | 1A7 1B7 | | | 1A7 1B7 | 1A5 1B5 | 1A3 | | | 1 1 | 1 | 4 | |
| +5.1V | | | | | | | | | | | | | 2A41 2B41 | 1A4 1B4 | | | | 2 | 7 | |
| +5.1V | | | | | | | | | | | | | | 2A42 2B42 | | | | | | |
| +5.1V | | | | | | | | | | | | | | 2A43 2B43 | | | | | | |
| +15V | | | 1A3 1B3 | 1A3 1B3 | 1A3 1B3 | 1A3 1B3 | 1A3 1B3 | 1A3 1B3 | 1A3 1B3 | 1A3 1B3 | 1A3 1B3 | 1A3 1B3 | 1A3 1B3 | 1B3 | | | | 1 | 1 | |
| +15V | | | 2A43 2B43 | 2A43 2B43 | 2A43 2B43 | 2A43 2B43 | 2A43 2B43 | 2A43 2B43 | 2A43 2B43 | 2A43 2B43 | 2A43 2B43 | 2A43 2B43 | 2A43 2B43 | | | | | | | |
| -5V | | 1A4 1B4 | 1A6 1B6 | 1A6 1B6 | 1A6 1B6 | 2A40 2B40 | 2A40 2B40 | 2A40 2B40 | 2A40 2B40 | 1A6 1B6 | 1A6 1B6 | 1A6 1B6 | | | | | | 25 | 9 | |
| -5V | | | 2A41 2B41 | 2A41 2B41 | 2A41 2B41 | | | | | 2A40 2B40 | 2A40 2B40 | 2A40 2B40 | | | | | | | | |
| -15V | | | 1A4 1B4 | 1A4 1B4 | 1A4 1B4 | 1A4 1B4 | 1A4 1B4 | 1A4 1B4 | 1A4 1B4 | 1A4 1B4 | 1A4 1B4 | 1A4 1B4 | 1A4 1B4 | | | | | | 3 | |
| -15V | | | | | | 2A42 2B42 | 2A42 2B42 | 2A42 2B42 | 2A42 2B42 | 2A42 2B42 | 2A42 2B42 | 2A42 2B42 | 2A42 2B42 | | | | | | | |
| B1/2 | | | | | | | | | | | | | | | | 24 24 | | | | |
| C | | | | | | | | | | | | | | | | 26 3 | | | | |
| +V1 | | | | | | | | | | | | 2B34 | | | | | | 15 | | |
| +V1 | | | | | | | | | | | | | | | | | | 16 | | |
| +V2 | | | | | | | | | | | | 2B33 | | | | | | 17 | | |
| +V2 | | | | | | | | | | | | | | | | | | 18 | | |
| 56 SLCT | | | | | | | | | | | | | | 2A14 | | | | 9 | | |

| | | | |
|---|---|---|---|
| Aloka | TITLE名称 Tx Rx unit MOTHER BOARD | MODEL形名 EP - 3466 B | 5/16 |
| 3RD ANGLE PROJECTION 第3角法 | DRAWN製図 企画G '92.9.14 近藤 | DESIGNED設計 企画G '92.9.14 近藤 | CHECKED検図 92.9.18 | APPROVED承認 92.9.18 八江 | DRAWING NO.図番 MC 325926 |
| SCALE 尺度 | | | |
| UNITS 単位 mm | | | |

REVISIONS 変更

7-74

| NO.J | EP-3452 | EP-3455 | EP-3456 | EP-3457 | EP-3458 | EP-3460 | EP-3460 | EP-3459 | EP-3459 | EP-3461 | EP-3462 | EP-3463 | EP-3464 | EP-3465 | J180 | J183 | J186 | J121 | J131 | J189 |
|---|---|---|---|---|---|---|---|---|---|---|---|---|---|---|---|---|---|---|---|---|
| | PROBE CH | SELECTOR | TX 1 | TX 2 | PREAMP | RX FOCUS1 | RX FOCUS2 | RX FOCUS3 | RX FOCUS4 | AMP&C ITF | COLOR ITF | VBPF&GCONT | TX TRIG | ADR&TIM | J181 | J184 | J187 | J122 | | J190 |
| SIG | J-100 | J-101 | J-102 | J-103 | J-104 | J-105 | J-106 | J-107 | J-108 | J-109 | J-110 | J-111 | J-112 | J-113 | J182 | J185 | J188 | J123 | J132 | J191 |
| 56/40 | | | | | | | | | | | | | | 1A22 | | | | | | 1 |
| ADRS 0 | | | | | | 1B16 | 1B16 | 1B16 | 1B16 | | | 1B18 | 1B16 | 1B16 | | | | 24 | | |
| ADRS 1 | | | | | | 1A16 | 1A16 | 1A16 | 1A16 | | | 1A18 | 1A16 | 1A16 | | | | 23 | | |
| ADRS 2 | | | | | | 1B15 | 1B15 | 1B15 | 1B15 | | | 1B17 | 1B15 | 1B15 | | | | 22 | | |
| ADRS 3 | | | | | | 1A15 | 1A15 | 1A15 | 1A15 | | | 1A17 | 1A15 | 1A15 | | | | 21 | | |
| AGCON/ | | | | | | | | | | 2B18 | | 2B18 | | | | | | | | |
| AGCSIG | | | | | | | | | | 2B28 | | 2B28 | | | | | | | | |
| AθO | | | | | | | | 1A30 | | | | | 1A30 | | | | | | | |
| Aθ1 | | | | | | | | 1B30 | | | | | 1B30 | | | | | | | |
| Aθ2 | | | | | | | | 1B29 | | | | | 1B29 | | | | | | | |
| B/W EN | | | | | | | | | | | | | | 2B20 | | | | 22 | | |
| B/D GATE | | | | | | 1A29 | 1A29 | 1A29 | 1A29 | 1B35 | 1B35 | | | 1A33 2B14 | | | | 10 | | |
| BAGC | | | | | | | | | | | | 2B30 | | | | | | 24 | | |
| BGAIN | | | | | | | | | | | | 2B31 | | | | | | 22 | | |
| BθO | | | | | | | | | 1A30 | | | | 1A29 | | | | | | | |
| Bθ1 | | | | | | | | | 1B30 | | | | 1B28 | | | | | | | |
| Bθ2 | | | | | | | | | 1B29 | | | | 1A28 | | | | | | | |
| C-EN | | | | | | | | | | | | | | 2B22 | | | | 26 | | |
| C-GATE | | | | | | | | | | | | | | 2A22 | | | | 25 | | |
| C.SA/ | | | | | | 1B31 | | 1B31 | | | | | | | | | | | | |
| C.SB/ | | | | | | | 1B31 | | 1B31 | | | | | | | | | | | |
| CARO | | | | | | | | | | 1A9 | 1A9 | | | 1A9 | | | | | | |
| CAR1 | | | | | | | | | | 1B9 | 1B9 | | | 1B9 | | | | | | |
| CC8/ | | | | | | | | | | | | | | 1B5 | | | | 4 | | |
| CKA | | | | | | 1B35 | | 1B35 | | | | | | | | | | | | |
| CKB | | | | | | | 1B35 | | 1B35 | | | | | | | | | | | |
| CKO | | | | | | | | | | | | | 1A8 | 1A8 | | | | | | |
| CK1 | | | | | | | | | | | | | 1B8 | 1B8 | | | | | | |
| COLORER | | | | | | | | | | | | | | 2A18 | | | | 17 | | |
| CONT 0 | | | | | | | | | | 2B15 | | 2B15 | | | | | | | | |
| CONT 1 | | | | | | | | | | 2B14 | | 2B14 | | | | | | | | |
| CONT 2 | | | | | | | | | | 2B13 | | 2B13 | | | | | | | | |
| CONT 3 | | | | | | | | | | | | 2B12 | | | | | | | | |
| CPU AV/ | | | | | | | | | | | | | 1A32 | | | | | 19 | | |
| D-OFF | | | | | | | | | | | | | | 2B15 | | | | 12 | | |
| D/ | | 1A 5 1B5 | | | | 1A25 | 1A25 | 1A25 | 1A25 | | | 1A25 | 1A25 | | | 23 | | | | |
| DATA 0 | | | | | | 1A10 | 1A10 | 1A10 | 1A10 | | | 1A12 | 1A10 | 1A10 | | | | 7 | | |
| DATA 1 | | | | | | 1B10 | 1B10 | 1B10 | 1B10 | | | 1B12 | 1B10 | 1B10 | | | | 8 | | |
| DATA 2 | | | | | | 1A11 | 1A11 | 1A11 | 1A11 | | | 1A13 | 1A11 | 1A11 | | | | 9 | | |
| DATA 3 | | | | | | 1B11 | 1B11 | 1B11 | 1B11 | | | 1B13 | 1B11 | 1B11 | | | | 10 | | |
| DATA 4 | | | | | | 1A12 | 1A12 | 1A12 | 1A12 | | | 1A14 | 1A12 | 1A12 | | | | 11 | | |
| DATA 5 | | | | | | 1B12 | 1B12 | 1B12 | 1B12 | | | 1B14 | 1B12 | 1B12 | | | | 12 | | |
| DATA 6 | | | | | | 1A13 | 1A13 | 1A13 | 1A13 | | | 1A15 | 1A13 | 1A13 | | | | 13 | | |

7-75

REVISIONS変更

Aloka

3RD ANGLE PROJECTION 第3角法

SCALE 尺度

UNITS 単位 mm

TITLE名称 Tx Rx unit MOTHER BOARD

MODEL形名 EP-3466 B

6/16

| DRAWN製図 | DESIGNED設計 | CHECKED検図 | APPD承認 |
|---|---|---|---|
| 企画G '92.9.1 近藤 | 企画G '92.9.1 近藤 | 企画G 92.9.10 [illegible] | 1技 92.9.10 入江 |

DRAWING NO.図番 MC 325927

013-10-82-A3

| NO.4 | EP-3452 | EP-3455 | EP-3456 | EP-3457 | EP-3458 | EP-3460 | EP-3460 | EP-3459 | EP-3459 | EP-3461 | EP-3462 | EP-3463 | EP-3464 | EP-3465 | J180 | J183 | J186 | J121 | J131 | J189 |
|---|---|---|---|---|---|---|---|---|---|---|---|---|---|---|---|---|---|---|---|---|
| | PROBE CH | SELECTOR | TX 1 | TX 2 | PREAMP | RX FOCUS1 | RX FOCUS2 | RX FOCUS3 | RX FOCUS4 | AMP&C ITF | COLOR ITF | VBPF&GCONT | TX TRIG | ADR&TIM | J181 | J184 | J187 | J122 | | J190 |
| SIG | J-100 | J-101 | J-102 | J-103 | J-104 | J-105 | J-106 | J-107 | J-108 | J-109 | J-110 | J-111 | J-112 | J-113 | J182 | J185 | J188 | J123 | J132 | J191 |
| DATA 7 | | | | | | 1B13 | 1B13 | 1B13 | 1B13 | | | 1B15 | 1B13 | 1B13 | | | | 14 | | |
| DCLR | | | | | | | | | | | | | | 2B21 | | | | 24 | | |
| DF AREA | | | | | | | | | | | | | | 2A32 | | | | 45 | | |
| DFZ/ | | | | | | | | | | | | | 1B35 | 1B35 2B19 | | | | 20 | | |
| DMCLK | | | | | | | | | | 1A8 | 1A8 | | | 1A7 | | | | | | |
| DMCLK/ | | | | | | | | | | 1B8 | 1B8 | | | 1B7 | | | | | | |
| DOP RATE | | | | | | | | | | | | | | 2B13 | | | | 8 | | |
| DOT CLK | | | | | | | | | | | | | | 2A13 | | | | 7 | | |
| DSA 0 | | | | | | 1A40 | | 1A40 | | | | | | | | | | | | |
| DSA 1 | | | | | | 1B40 | | 1B40 | | | | | | | | | | | | |
| DSA 2 | | | | | | 1A39 | | 1A39 | | | | | | | | | | | | |
| DSA 3 | | | | | | 1B39 | | 1B39 | | | | | | | | | | | | |
| DSA 4 | | | | | | 1A38 | | 1A38 | | | | | | | | | | | | |
| DSA 5 | | | | | | 1B38 | | 1B38 | | | | | | | | | | | | |
| DSB 0 | | | | | | | 1A40 | | 1A40 | | | | | | | | | | | |
| DSB 1 | | | | | | | 1B40 | | 1B40 | | | | | | | | | | | |
| DSB 2 | | | | | | | 1A39 | | 1A39 | | | | | | | | | | | |
| DSB 3 | | | | | | | 1B39 | | 1B39 | | | | | | | | | | | |
| DSB 4 | | | | | | | 1A38 | | 1A38 | | | | | | | | | | | |
| DSB 5 | | | | | | | 1B38 | | 1B38 | | | | | | | | | | | |
| DSC-CEN | | | | | | | | | | | | | | 2A21 | | | | 23 | | |
| ECG-FRM | | | | | | | | | | | | | | 2A33 | | | | 47 | | |
| ECHANGE | | | | | | | | | | 1B40 | 1B40 | 1B27 | | 1B27 | | | | | | |
| EN0/ | | | | | | | | | | | | 1B16 | | | | | | 17 | | |
| EN1/ | | | | | | 1B14 | 1B14 | 1B14 | 1B14 | | | | | | | | | 18 | | |
| EN2/ | | | | | | | | | | | | | | 1A14 | | | | 15 | | |
| EN3/ | | | | | | | | | | | | | 1B14 | | | | | 11 | | |
| EN4/ | | | | | | | | | | | | | | 1B14 | | | | 16 | | |
| ENDADRS0 | | | | | | | | 1A18 | 1A18 | | | | 1A18 | | | | | | | |
| ENDADRS1 | | | | | | | | 1B19 | 1B19 | | | | 1B19 | | | | | | | |
| ENDADRS2 | | | | | | | | 1A19 | 1A19 | | | | 1A19 | | | | | | | |
| ENDADRS3 | | | | | | | | 1B20 | 1B20 | | | | 1B20 | | | | | | | |
| ENDADRS4 | | | | | | | | 1A20 | 1A20 | | | | 1A20 | | | | | | | |
| EQSET | | | | | | | | | | | | | 2A35 | 2A35 | | | | | | |
| FOCONT | | | | | | | | 1B41 | 1B41 | | | 1B34 | | | | | | | | |
| FASET | | | | | | | | | | | | | 2B35 | 2B35 | | | | | | |
| FCODE 0 | | | | | | | | | | | | 1A26 | 1A26 | 1A26 | | | | | | |
| FCODE 1 | | | | | | | | | | | | 1B26 | 1B26 | 1B26 | | | | | | |
| FCODE 2 | | | | | | | | | | | | | 1A27 | 1A27 | | | | | | |
| FLGAIN 0 | | | | | | | | | | 1B30 | 1B30 | 1B30 | | | | | | | | |
| FLGAIN 1 | | | | | | | | | | 1A30 | 1A30 | 1A30 | | | | | | | | |
| FLGAIN 2 | | | | | | | | | | 1B31 | 1B31 | 1B31 | | | | | | | | |

REVISIONS変更

Aloka

3RD ANGLE PROJECTION 第3角法

SCALE 尺度

UNITS 単位 mm

TITLE名称 Tx Rx Unit MOTHER BOARD

MODEL形名 EP-3466B

7/16

| DRAWN製図 | DESIGNED設計 | CHECKED検図 | APPD承認 |
|---|---|---|---|
| 企画G 92.9.10 近藤 | 企画G 92.9.10 近藤 | 92.9.10 | 92.9.10 入江 |

DRAWING NO.図番 MC 325928

7 - 76

| NO.5 | EP-3452 | EP-3455 | EP-3456 | EP-3457 | EP-3458 | EP-3460 | EP-3460 | EP-3459 | EP-3459 | EP-3461 | EP-3462 | EP-3463 | EP-3464 | EP-3465 | J180 | J183 | J186 | J121 | J131 | J189 |
|---|---|---|---|---|---|---|---|---|---|---|---|---|---|---|---|---|---|---|---|---|
| | PROBE CH | SELECTOR | TX 1 | TX 2 | PREAMP | RX FOCUS1 | RX FOCUS2 | RX FOCUS3 | RX FOCUS4 | AMP&C ITF | COLOR ITF | VBPF&GCONT | TX TRIG | ADR&TIM | J181 | J184 | J187 | J122 | | J190 |
| SIG | J-100 | J-101 | J-102 | J-103 | J-104 | J-105 | J-106 | J-107 | J-108 | J-109 | J-110 | J-111 | J-112 | J-113 | J182 | J185 | J188 | J123 | J132 | J191 |
| FLGAIN 3 | | | | | | | | | | 1A31 | 1A31 | 1A31 | | | | | | | | |
| FLGAIN 4 | | | | | | | | | | 1B32 | 1B32 | 1B32 | | | | | | | | |
| FLGAIN 5 | | | | | | | | | | 1A32 | 1A32 | 1A32 | | | | | | | | |
| FLGAIN 6 | | | | | | | | | | 1B33 | 1B33 | 1B33 | | | | | | | | |
| FLGAIN 7 | | | | | | | | | | 1A33 | 1A33 | 1A33 | | | | | | | | |
| FLW CT/ | | | | | | | | | | | | | | 2A23 | | | | 27 | | |
| FLWAREA | | | | | | | | | | | | | | 2A20 | | | | 21 | | |
| FOCUSAD0 | | | | 1B17 | | 1A21 | 1A21 | 1A21 | 1A21 | | | 1A21 | 1A21 | | | | | | | 7 |
| FOCUSAD1 | | | | 1A17 | | 1B21 | 1B21 | 1B21 | 1B21 | | | 1B21 | 1B21 | | | | | | | 8 |
| FOCUSAD2 | | | | 1B18 | | 1A22 | 1A22 | 1A22 | 1A22 | | | 1A22 | 1A22 | | | | | | | 9 |
| FOCUSAD3 | | | | 1A18 | | 1B22 | 1B22 | 1B22 | 1B22 | | | 1B22 | 1B22 | | | | | | | 10 |
| FOCUSAD4 | | | | 1B19 | | 1A23 | 1A23 | 1A23 | 1A23 | | | 1A23 | 1A23 | | | | | | | 11 |
| FOCUSAD5 | | | | 1A19 | | 1B23 | 1B23 | 1B23 | 1B23 | | | 1B23 | 1B23 | | | | | | | 12 |
| FOCUSAD6 | | | | 1B20 | | 1A24 | 1A24 | 1A24 | 1A24 | | | 1A24 | 1A24 | | | | | | | 13 |
| FOCUSAD7 | | | | 1A20 | | | | | | | | 1B24 | 1B24 | | | | | | | 14 |
| FRMEND | | | | | | | | | | | | | 2A29 | 2A29 | | | | 39 | | |
| FTCON/ | | | | | | | | | | 2B27 | | 2B27 | | | | | | | | |
| GAINCONT | | | | | | | | | | 2B23 | | 2B23 | | | | | | | | |
| HV | | | 2A38 2B38 | 2A38 2B38 | | | | | | | | | | | | | | | 1 | |
| L ON/OFF | 2B2 | | | | | | | | | | | | | | | 27 4 | | | | |
| L/S | | | | | | | | | | 2B22 | | | 2B22 | | | | | | | 15 |
| LIN USGT | | | | | | | | | | | | | 1B34 | 1B34 | | | | | | |
| LIN/ | | | | | | | | | | 1B29 | | 1B29 | 1B31 | | | | | | | |
| LINESTRT | | | | | | | | | | | | | | 2A31 | | | | 43 | | |
| LINREC+ | | | | | | | | 2B2 | 2B2 | 2B2 | | | | | | | | | | |
| LINREC- | | | | | | | | 2B3 | 2B3 | 2B3 | | | | | | | | | | |
| LINRF1 | | | | | | | | | 1B44 | 1B44 | 1B44 | | | | | | | | | |
| LINRF2 | | | | | | | | 1B44 | | 1B43 | 1B43 | | | | | | | | | |
| MA 0/ | | | | | | | | | | | | | 2B25 | 2B25 | | | | 32 | | |
| MA 1/ | | | | | | | | | | | | | 2A25 | 2A25 | | | | 31 | | |
| MA 2/ | | | | | | | | | | | | | 2B26 | 2B26 | | | | 34 | | |
| MA 3/ | | | | | | | | | | | | | 2A26 | 2A26 | | | | 33 | | |
| MA 4/ | | | | | | | | | | | | | 2B27 | 2B27 | | | | 36 | | |
| MA 5/ | | | | | | | | | | | | | 2A27 | 2A27 | | | | 35 | | |
| MA 6/ | | | | | | | | | | | | | 2B28 | 2B28 | | | | 38 | | |
| MA 7/ | | | | | | | | | | | | | 2A28 | 2A28 | | | | 37 | | |
| MA 8/ | | | | | | | | | | | | | 2B29 | 2B29 | | | | 40 | | |
| MAGC | | | | | | | | | | | | 2B29 | | | | | | 26 | | |
| MGAIN | | | | | | | | | | | | 2B32 | | | | | | 20 | | |
| MIT EN/ | | | | | | | | | | | | | | 2A19 | | | | 19 | | |
| PC301 | 1A12 | | | | | | | | | | | | | | | 21 | | | | |
| PC302 | 1B12 | | | | | | | | | | | | | | | 22 | | | | |
| PC303 | 1A11 | | | | | | | | | | | | | | | 23 | | | | |

44-4

REVISIONS 変更

Aloka

3RD ANGLE PROJECTION 第3角法

SCALE 尺度

UNITS 単位 mm

TITLE 名称 Tx Rx unit

MOTHER BOARD

MODEL 形名 EP-3465B

DRAWN 製図 企画G 92.9.10 近藤

DESIGNED 設計 企画G 92.9.10 近藤

CHECKED 検図 92.9.10 鳥居

APPD 承認 92.9.10 人江

DRAWING NO. 図番 MC 325929

8/16

| NO.6 | EP-3452 | EP-3455 | EP-3456 | EP-3457 | EP-3458 | EP-3460 | EP-3460 | EP-3459 | EP-3459 | EP-3461 | EP-3462 | EP-3463 | EP-3464 | EP-3465 | J180 | J183 | J186 | J121 | J131 | J189 |
|---|---|---|---|---|---|---|---|---|---|---|---|---|---|---|---|---|---|---|---|---|
| | PROBE CH | SELECTOR | TX 1. | TX 2 | PREAMP | RX FOCUS1 | RX FOCUS2 | RX FOCUS3 | RX FOCUS4 | AMP&C ITF | COLOR ITF | VBPF&GCONT | TX TRIG | ADR&TIM | J181 | J184 | J187 | J122 | | J190 |
| SIG | J-100 | J-101 | J-102 | J-103 | J-104 | J-105 | J-106 | J-107 | J-108 | J-109 | J-110 | J-111 | J-112 | J-113 | J182 | J185 | J188 | J123 | J132 | J191 |
| PCD101 | 1A3 | | | | | | | | | | | | | | | 5 | | | | |
| PCD102 | 1B4 | | | | | | | | | | | | | | | 6 | | | | |
| PCD103 | 1A4 | | | | | | | | | | | | | | | 7 | | | | |
| PCD104 | 1B5 | | | | | | | | | | | | | | | 8 | | | | |
| PCD105 | 1A5 | | | | | | | | | | | | | | | 9 | | | | |
| PCD106 | 1B6 | | | | | | | | | | | | | | | 10 | | | | |
| PCD107 | 1A6 | | | | | | | | | | | | | | | 11 | | | | |
| PCD108 | 1B7 | | | | | | | | | | | | | | | 12 | | | | |
| PCD201 | 1A7 | | | | | | | | | | | | | | | 13 | | | | |
| PCD202 | 1B8 | | | | | | | | | | | | | | | 14 | | | | |
| PCD203 | 1A8 | | | | | | | | | | | | | | | 15 | | | | |
| PCD204 | 1B9 | | | | | | | | | | | | | | | 16 | | | | |
| PCD205 | 1A9 | | | | | | | | | | | | | | | 17 | | | | |
| PCD206 | 1B10 | | | | | | | | | | | | | | | 18 | | | | |
| PCD207 | 1A10 | | | | | | | | | | | | | | | 19 | | | | |
| PCD208 | 1B11 | | | | | | | | | | | | | | | 20 | | | | |
| PCD301 | | | | | | | | | | | | | | | | 31 6 | | | | |
| PCD302 | | | | | | | | | | | | | | | | 32 5 | | | | |
| PCD303 | | | | | | | | | | | | | | | | 33 8 | | | | |
| PCD304 | | | | | | | | | | | | | | | | 34 7 | | | | |
| PCD305 | | | | | | | | | | | | | | | | 35 10 | | | | |
| PCD306 | | | | | | | | | | | | | | | | 25 9 | | | | |
| PCD307 | | | | | | | | | | | | | | | | 47 12 | | | | |
| PCD308 | | | | | | | | | | | | | | | | 48 11 | | | | |
| PCD401 | | | | | | | | | | | | | | | | 36 13 | | | | |
| PCD402 | | | | | | | | | | | | | | | | 37 14 | | | | |
| PCD403 | | | | | | | | | | | | | | | | 38 15 | | | | |
| PCD404 | | | | | | | | | | | | | | | | 39 16 | | | | |
| PCD405 | | | | | | | | | | | | | | | | 40 17 | | | | |
| PCD406 | | | | | | | | | | | | | | | | 41 18 | | | | |
| PCD407 | | | | | | | | | | | | | | | | 42 19 | | | | |
| PCD408 | | | | | | | | | | | | | | | | 43 20 | | | | |
| PRB 1/2 | 2A2 | | | | | | | | | | | | | | | 4 | | | | |
| PRB 3/4 | | | | | | | | | | | | | | | | 46 21 | | | | |
| PRECONT | | | | | | | | | | | | 2B7 | 1B37 | 2B7 | | | | | | |
| PRESTC 1 | | | | | 1B9 | | | | | | | 1B44 | | | | | | | | |
| PS 1 | 1B3 | | | | | | | | | | | | | | | 44 | | | | |
| PS 2 | | | | | | | | | | | | | | | | 45 22 | | | | |
| RA | | | | | | 1A31 | | 1A31 | | | | | | | | | | | | |
| RB | | | | | | | 1A31 | | 1A31 | | | | | | | | | | | |
| R-R | | | | | | | | | | | | | | 1A5 | | | | 3 | | |
| R.ADA0 | | | | | | 1A34 | | 1A34 | | | | | | | | | | | | |
| R.ADA1 | | | | | | 1B34 | | 1B34 | | | | | | | | | | | | |

| | | | | |
|---|---|---|---|---|
| Aloka | TITLE名称 Tx Rx unit MOTHER BOARD | | MODEL形名 EP-3466B | 9/16 |
| 3RD ANGLE PROJECTION 第3角法 | DRAWN製図 企画G 92.9.17 近藤 | DESIGNED設計 企画G 92.9.17 近藤 | CHECKED検図 92.9.18 | APPD承認 92.9.18 |
| SCALE 尺度 | | | | DRAWING NO. 図番 MC 325930 |
| UNITS 単位 mm | | | | |

REVISIONS変更

87-78

| NO.7 | EP-3452 | EP-3455 | EP-3456 | EP-3457 | EP-3458 | EP-3460 | EP-3460 | EP-3459 | EP-3459 | EP-3461 | EP-3462 | EP-3463 | EP-3464 | EP-3465 | J180 | J183 | J186 | J121 | J131 | J189 |
|---|---|---|---|---|---|---|---|---|---|---|---|---|---|---|---|---|---|---|---|---|
| | PROBE CH | SELECTOR | TX 1 | TX 2 | PREAMP | RX FOCUS1 | RX FOCUS2 | RX FOCUS3 | RX FOCUS4 | AMP&C ITF | COLOR ITF | VBPF&GCONT | TX TRIG | ADR&TIM | J181 | J184 | J187 | J122 | | J190 |
| SIG | J-100 | J-101 | J-102 | J-103 | J-104 | J-105 | J-106 | J-107 | J-108 | J-109 | J-110 | J-111 | J-112 | J-113 | J182 | J185 | J188 | J123 | J132 | J191 |
| R.ADA2 | | | | | | 1A33 | | 1A33 | | | | | | | | | | | | |
| R.ADA3 | | | | | | 1B33 | | 1B33 | | | | | | | | | | | | |
| R.ADA4 | | | | | | 1A32 | | 1A32 | | | | | | | | | | | | |
| R.ADA5 | | | | | | 1B32 | | 1B32 | | | | | | | | | | | | |
| R.ADB0 | | | | | | | 1A34 | | 1A34 | | | | | | | | | | | |
| R.ADB1 | | | | | | | 1B34 | | 1B34 | | | | | | | | | | | |
| R.ADB2 | | | | | | | 1A33 | | 1A33 | | | | | | | | | | | |
| R.ADB3 | | | | | | | 1B33 | | 1B33 | | | | | | | | | | | |
| R.ADB4 | | | | | | | 1A32 | | 1A32 | | | | | | | | | | | |
| R.ADB5 | | | | | | | 1B32 | | 1B32 | | | | | | | | | | | |
| REC 0 | | | | | 2A38 | 2A38 | 2A38 | 2A38 | 2A38 | | | | | | | | | | | |
| REC 1 | | | | | 2B38 | 2B38 | 2B38 | 2B38 | 2B38 | | | | | | | | | | | |
| REC 2 | | | | | 2A37 | 2A37 | 2A37 | 2A37 | 2A37 | | | | | | | | | | | |
| REC 3 | | | | | 2B37 | 2B37 | 2B37 | 2B37 | 2B37 | | | | | | | | | | | |
| REC 4 | | | | | 2A36 | 2A36 | 2A36 | 2A36 | 2A36 | | | | | | | | | | | |
| REC 5 | | | | | 2B36 | 2B36 | 2B36 | 2B36 | 2B36 | | | | | | | | | | | |
| REC 6 | | | | | 2A35 | 2A35 | 2A35 | 2A35 | 2A35 | | | | | | | | | | | |
| REC 7 | | | | | 2B35 | 2B35 | 2B35 | 2B35 | 2B35 | | | | | | | | | | | |
| REC 8 | | | | | 2A33 | 2A33 | 2A33 | 2A33 | 2A33 | | | | | | | | | | | |
| REC 9 | | | | | 2B33 | 2B33 | 2B33 | 2B33 | 2B33 | | | | | | | | | | | |
| REC10 | | | | | 2A32 | 2A32 | 2A32 | 2A32 | 2A32 | | | | | | | | | | | |
| REC11 | | | | | 2B32 | 2B32 | 2B32 | 2B32 | 2B32 | | | | | | | | | | | |
| REC12 | | | | | 2A31 | 2A31 | 2A31 | 2A31 | 2A31 | | | | | | | | | | | |
| REC13 | | | | | 2B31 | 2B31 | 2B31 | 2B31 | 2B31 | | | | | | | | | | | |
| REC14 | | | | | 2A30 | 2A30 | 2A30 | 2A30 | 2A30 | | | | | | | | | | | |
| REC15 | | | | | 2B30 | 2B30 | 2B30 | 2B30 | 2B30 | | | | | | | | | | | |
| REC16 | | | | | 2A28 | 2A28 | 2A28 | 2A28 | 2A28 | | | | | | | | | | | |
| REC17 | | | | | 2B28 | 2B28 | 2B28 | 2B28 | 2B28 | | | | | | | | | | | |
| REC18 | | | | | 2A27 | 2A27 | 2A27 | 2A27 | 2A27 | | | | | | | | | | | |
| REC19 | | | | | 2B27 | 2B27 | 2B27 | 2B27 | 2B27 | | | | | | | | | | | |
| REC20 | | | | | 2A26 | 2A26 | 2A26 | 2A26 | 2A26 | | | | | | | | | | | |
| REC21 | | | | | 2B26 | 2B26 | 2B26 | 2B26 | 2B26 | | | | | | | | | | | |
| REC22 | | | | | 2A25 | 2A25 | 2A25 | 2A25 | 2A25 | | | | | | | | | | | |
| REC23 | | | | | 2B25 | 2B25 | 2B25 | 2B25 | 2B25 | | | | | | | | | | | |
| REC24 | | | | | 2A23 | 2A23 | 2A23 | 2A23 | 2A23 | | | | | | | | | | | |
| REC25 | | | | | 2B23 | 2B23 | 2B23 | 2B23 | 2B23 | | | | | | | | | | | |
| REC26 | | | | | 2A22 | 2A22 | 2A22 | 2A22 | 2A22 | | | | | | | | | | | |
| REC27 | | | | | 2B22 | 2B22 | 2B22 | 2B22 | 2B22 | | | | | | | | | | | |
| REC28 | | | | | 2A21 | 2A21 | 2A21 | 2A21 | 2A21 | | | | | | | | | | | |
| REC29 | | | | | 2B21 | 2B21 | 2B21 | 2B21 | 2B21 | | | | | | | | | | | |
| REC30 | | | | | | 2A20 | 2A20 | 2A20 | 2A20 | | | | | | | 23 | | | | |
| REC31 | | | | | | 2B20 | 2B20 | 2B20 | 2B20 | | | | | | | 24 | | | | |
| REC32 | | | | | | 2A18 | 2A18 | 2A18 | 2A18 | | | | | | | 19 | | | | |

64-4

REVISIONS変更

Aloka

3RD ANGLE PROJECTION 第3角法

SCALE 尺度

UNITS 単位 mm

TITLE名称 Tx Rx Unit
MOTHER BOARD

MODEL形名 EP-3466B

10/16

| DRAWN製図 | DESIGNED設計 | CHECKED検図 | APPD承認 |
|---|---|---|---|
| 企画G '92.9.10 近藤 | 企画G '92.9.10 近藤 | '92.9.10 | '92.9.10 |

DRAWING NO. 図番 MC 325931

| NO.8 | EP-3452 | EP-3455 | EP-3456 | EP-3457 | EP-3458 | EP-3460 | EP-3460 | EP-3459 | EP-3459 | EP-3461 | EP-3462 | EP-3463 | EP-3464 | EP-3465 | J180 | J183 | J186 | J121 | J131 | J189 |
|---|---|---|---|---|---|---|---|---|---|---|---|---|---|---|---|---|---|---|---|---|
| | PROBE CH | SELECTOR | TX 1 | TX 2 | PREAMP | RX FOCUS1 | RX FOCUS2 | RX FOCUS3 | RX FOCUS4 | AMP&C ITF | COLOR ITF | VBPF&GCONT | TX TRIG | ADR&TIM | J181 | J184 | J187 | J122 | | J190 |
| SIG | J-100 | J-101 | J-102 | J-103 | J-104 | J-105 | J-106 | J-107 | J-108 | J-109 | J-110 | J-111 | J-112 | J-113 | J182 | J185 | J188 | J123 | J132 | J191 |
| REC33 | | | | | | 2B18 | 2B18 | 2B18 | 2B18 | | | | | | | 20 | | | | |
| REC34 | | | | | | 2A17 | 2A17 | 2A17 | 2A17 | | | | | | | 17 | | | | |
| REC35 | | | | | | 2B17 | 2B17 | 2B17 | 2B17 | | | | | | | 18 | | | | |
| REC36 | | | | | | 2A16 | 2A16 | 2A16 | 2A16 | | | | | | | 15 | | | | |
| REC37 | | | | | | 2B16 | 2B16 | 2B16 | 2B16 | | | | | | | 16 | | | | |
| REC38 | | | | | | 2A15 | 2A15 | 2A15 | 2A15 | | | | | | | 13 | | | | |
| REC39 | | | | | | 2B15 | 2B15 | 2B15 | 2B15 | | | | | | | 14 | | | | |
| REC40 | | | | | | 2A13 | 2A13 | 2A13 | 2A13 | | | | | | | 9 | | | | |
| REC41 | | | | | | 2B13 | 2B13 | 2B13 | 2B13 | | | | | | | 10 | | | | |
| REC42 | | | | | | 2A12 | 2A12 | 2A12 | 2A12 | | | | | | | 7 | | | | |
| REC43 | | | | | | 2B12 | 2B12 | 2B12 | 2B12 | | | | | | | 8 | | | | |
| REC44 | | | | | | 2A11 | 2A11 | 2A11 | 2A11 | | | | | | | 5 | | | | |
| REC45 | | | | | | 2B11 | 2B11 | 2B11 | 2B11 | | | | | | | 6 | | | | |
| REC46 | | | | | | 2A10 | 2A10 | 2A10 | 2A10 | | | | | | | 3 | | | | |
| REC47 | | | | | | 2B10 | 2B10 | 2B10 | 2B10 | | | | | | | 4 | | | | |
| REC30' | | | | | 1A44 | | | | | | | | | | | | 23 | | | |
| REC31' | | | | | 1B44 | | | | | | | | | | | | 24 | | | |
| REC32' | | | | | 1A42 | | | | | | | | | | | | 19 | | | |
| REC33' | | | | | 1B42 | | | | | | | | | | | | 20 | | | |
| REC34' | | | | | 1A41 | | | | | | | | | | | | 17 | | | |
| REC35' | | | | | 1B41 | | | | | | | | | | | | 18 | | | |
| REC36' | | | | | 1A40 | | | | | | | | | | | | 15 | | | |
| REC37' | | | | | 1B40 | | | | | | | | | | | | 16 | | | |
| REC38' | | | | | 1A39 | | | | | | | | | | | | 13 | | | |
| REC39' | | | | | 1B39 | | | | | | | | | | | | 14 | | | |
| REC40' | | | | | 1A37 | | | | | | | | | | | | 9 | | | |
| REC41' | | | | | 1B37 | | | | | | | | | | | | 10 | | | |
| REC42' | | | | | 1A36 | | | | | | | | | | | | 7 | | | |
| REC43' | | | | | 1B36 | | | | | | | | | | | | 8 | | | |
| REC44' | | | | | 1A35 | | | | | | | | | | | | 5 | | | |
| REC45' | | | | | 1B35 | | | | | | | | | | | | 6 | | | |
| REC46' | | | | | 1A34 | | | | | | | | | | | | 3 | | | |
| REC47' | | | | | 1B34 | | | | | | | | | | | | 4 | | | |
| RECSEC A | | | | | | 2B8 | | 2B8 | | | | | | | | | | | | |
| RECSEC B | | | | | | | 2B8 | | 2B8 | | | | | | | | | | | |
| REL 0 | | | | | | | | | | 2B17 | | 2B17 | | | | | | | | |
| REL 1 | | | | | | | | | | 2B16 | | 2B16 | | | | | | | | |
| RMSLCT0 | | | | | | | | | | | | | 2B30 | 2B30 | | | | 42 | | |
| RMSLCT1 | | | | | | | | | | | | | 2A30 | 2A30 | | | | 41 | | |
| RXECH 0 | | | | | | | | | 1A9 | | | 1A11 | | | | | | | | |
| RXECH 0/ | | | | | | | | | 1B9 | | | 1B11 | | | | | | | | |
| RXECH 1 | | | | | | | | 1A9 | | | | 1A9 | | | | | | | | |
| RXECH 1/ | | | | | | | | 1B9 | | | | 1B9 | | | | | | | | |

REVISIONS変更

Aloka

3RD ANGLE PROJECTION 第3角法

SCALE 尺度

UNITS 単位 mm

TITLE名称 Tx Rx unit

MOTHER BOARD

DRAWN製図 企画G '92.9.13 近藤

DESIGNED設計 企画G '92.9.13 近藤

CHECKED検図 企画G '92.9.10 藤本

APPD承認 1種 '92.9.18 入江

MODEL形名 EP-3466B

DRAWING NO.図番 MC 325932

11/16

7-80

| NO.9 | EP-3452 | EP-3455 | EP-3456 | EP-3457 | EP-3458 | EP-3460 | EP-3460 | EP-3459 | EP-3459 | EP-3461 | EP-3462 | EP-3463 | EP-3464 | EP-3465 | J180 | J183 | J186 | J121 | J131 | J189 |
|---|---|---|---|---|---|---|---|---|---|---|---|---|---|---|---|---|---|---|---|---|
| | PROBE CH | SELECTOR | TX 1 | TX 2 | PREAMP | RX FOCUS1 | RX FOCUS2 | RX FOCUS3 | RX FOCUS4 | AMP&C ITF | COLOR ITF | VBPF&GCONT | TX TRIG | ADR&TIM | J181 | J184 | J187 | J122 | | J190 |
| SIG | J-100 | J-101 | J-102 | J-103 | J-104 | J-105 | J-106 | J-107 | J-108 | J-109 | J-110 | J-111 | J-112 | J-113 | J182 | J185 | J188 | J123 | J132 | J191 |
| SA 0 | | | | | | 1B27 | | 1B27 | | | | | | | | | | | | |
| SA 1 | | | | | | 1A28 | | 1A28 | | | | | | | | | | | | |
| SA 2 | | | | | | 1B28 | | 1B28 | | | | | | | | | | | | |
| SB 0 | | | | | | | 1B27 | | 1B27 | | | | | | | | | | | |
| SB 1 | | | | | | | 1A28 | | 1A28 | | | | | | | | | | | |
| SB 2 | | | | | | | 1B28 | | 1B28 | | | | | | | | | | | |
| SCLK | | | | | | | | | | | | | | 2B23 | | | | 28 | | |
| SEL 0 | | 1B6 | 1B7 | 1B7 | | | | | | | | | | | | | | | | 1 |
| SEL 1 | | 1A6 | 1A7 | 1A7 | | | | | | | | | | | | | | | | 2 |
| SEL 2 | | 1B7 | 1B8 | 1B8 | | | | | | | | | | | | | | | | 3 |
| SEL 3 | | 1A7 | 1A8 | 1A8 | | | | | | | | | | | | | | | | 4 |
| SEL 4 | | 1B8 | 1B9 | 1B9 | | | | | | | | | | | | | | | | 5 |
| SEL 5 | | 1A8 | 1A9 | 1A9 | | | | | | | | | | | | | | | | 6 |
| SEL 6 | | 1B9 | 1B10 | 1B10 | | | | | | | | | | | | | | | | 7 |
| SEL 7 | | 1A9 | 1A10 | 1A10 | | | | | | | | | | | | | | | | 8 |
| SLCK 0 | | | 1B11 | 1B11 | | | | | | | | | | | | | | | | 9 |
| SLCK 1 | | | 1A11 | 1A11 | | | | | | | | | | | | | | | | 10 |
| SLCK 2 | | | | 1B12 | | | | | | | | | | | | | | | | 11 |
| SLCK 3 | | | | 1A12 | | | | | | | | | | | | | | | | 12 |
| SLCK 4 | | | 1B12 | 1B13 | | | | | | | | | | | | | | | | 13 |
| SLCK 5 | | | 1A12 | 1A13 | | | | | | | | | | | | | | | | 14 |
| SLCK 6 | | | | 1B14 | | | | | | | | | | | | | | | | 15 |
| SLCK 7 | | | | 1A14 | | | | | | | | | | | | | | | | 16 |
| SLCK 8 | | | 1B13 | 1B15 | | | | | | | | | | | | | | | | 17 |
| SLCK 9 | | | 1A13 | 1A15 | | | | | | | | | | | | | | | | 18 |
| SLCK10 | | | | 1B16 | | | | | | | | | | | | | | | | 19 |
| SLCK11 | | | | 1A16 | | | | | | | | | | | | | | | | 20 |
| SLCK12 | | 1B10 | | | | | | | | | | | | | | | | | | 21 |
| SLCK13 | | 1A10 | | | | | | | | | | | | | | | | | | 22 |
| SLCK14 | | 1B11 | | | | | | | | | | | | | | | | | | 23 |
| SLCK15 | | 1A11 | | | | | | | | | | | | | | | | | | 24 |
| SLCK16 | | 1B12 | | | | | | | | | | | | | | | | | | 25 |
| SLCK17 | | 1A12 | | | | | | | | | | | | | | | | | | 26 |
| SLCK18 | | 1B13 | | | | | | | | | | | | | | | | | | 27 |
| SLCK19 | | 1A13 | | | | | | | | | | | | | | | | | | 28 |
| SLCK20 | | 1B14 | | | | | | | | | | | | | | | | | | 29 |
| SLCK21 | | 1A14 | | | | | | | | | | | | | | | | | | 30 |
| SLCK22 | | 1B15 | | | | | | | | | | | | | | | | | | 31 |
| SLCK23 | | 1A15 | | | | | | | | | | | | | | | | | | 32 |
| SLTEST | | | | | | | | | | | | | 2B38 | 2B38 | | | | | | |
| S/L | | | | 1B21 | | | | | | | | | 2A22 | | | | | | | |
| SP UNBLK | | | | | | | | | | | | | | 2B12 | | | | 6 | | |
| SPRSET | | | | | | | | | | | | | 2A38 | 2A38 | | | | | | |

REVISIONS 変更

Aloka

3RD ANGLE PROJECTION 第3角法

SCALE 尺度

UNITS 単位 mm

TITLE 名称 Tx Rx Unit
MOTHER BOARD

MODEL 形名
EP-3466B

12/16

| DRAWN 製図 | DESIGNED 設計 | CHECKED 検図 | APPD 承認 |
|---|---|---|---|
| 企画G 92.9.10 | 企画G 92.9.10 近藤 | 92.9.10 | 92.9.10 |

DRAWING NO. 図番
MC 325933

| NO.10 | EP-3452 | EP-3455 | EP-3456 | EP-3457 | EP-3458 | EP-3460 | EP-3460 | EP-3459 | EP-3459 | EP-3461 | EP-3462 | EP-3463 | EP-3464 | EP-3465 | J180 | J183 | J186 | J121 | J131 | J189 |
|---|---|---|---|---|---|---|---|---|---|---|---|---|---|---|---|---|---|---|---|---|
| | PROBE CH | SELECTOR | TX 1 | TX 2 | PREAMP | RX FOCUS1 | RX FOCUS2 | RX FOCUS3 | RX FOCUS4 | AMP&C ITF | COLOR ITF | VBPF&GCONT | TX TRIG | ADR&TIM | J181 | J184 | J187 | J122 | | J190 |
| SIG | J-100 | J-101 | J-102 | J-103 | J-104 | J-105 | J-106 | J-107 | J-108 | J-109 | J-110 | J-111 | J-112 | J-113 | J182 | J185 | J188 | J123 | J132 | J191 |
| STC 1 | | | | | | | | | | | | 2AJ9 | | | | | | 3 | | |
| STC 2 | | | | | | | | | | | | 2B39 | | | | | | 4 | | |
| STC 3 | | | | | | | | | | | | 2AJ8 | | | | | | 5 | | |
| STC 4 | | | | | | | | | | | | 2B38 | | | | | | 6 | | |
| STC 5 | | | | | | | | | | | | 2AJ7 | | | | | | 7 | | |
| STC 6 | | | | | | | | | | | | 2B37 | | | | | | 8 | | |
| STC 7 | | | | | | | | | | | | 2AJ6 | | | | | | 9 | | |
| STC 8 | | | | | | | | | | | | 2B36 | | | | | | 10 | | |
| STC 9 | | | | | | | | | | | | 2AJ5 | | | | | | 11 | | |
| STC10 | | | | | | | | | | | | 2B35 | | | | | | 12 | | |
| STC11 | | | | | | | | | | | | 2AJ4 | | | | | | 13 | | |
| STCCONT0 | | | | | | | | | | | | 1B20 | | 1A18 | | | | | | |
| STCCONT1 | | | | | | | | | | | | 1A20 | | 1B18 | | | | | | |
| TXCONT | | | | | | | | | | | | | 1B36 | 1B44 | | | | | | |
| TR UNBLK | | | | | | | | | | | | | | 2B11 | | | | 4 | | |
| TRIG OFF | | | | | | | | | | | | | 1B32 | | | | | 20 | | |
| TX 1 | 2A41 | 2B41 | 2B36 | | | | | | | | | | | | 54 | | | | | |
| TX 2 | 2A38 | 2B38 | 2B33 | | | | | | | | | | | | 48 | | | | | |
| TX 3 | 2A35 | 2B35 | 2B30 | | | | | | | | | | | | 42 | | | | | |
| TX 4 | 2A32 | 2B32 | 2B27 | | | | | | | | | | | | 36 | | | | | |
| TX 5 | 2A28 | 2B28 | 2B24 | | | | | | | | | | | | 26 | | | | | |
| TX 6 | 2A25 | 2B25 | 2B21 | | | | | | | | | | | | 20 | | | | | |
| TX 7 | 2A22 | 2B22 | 2B18 | | | | | | | | | | | | 14 | | | | | |
| TX 8 | 2A19 | 2B19 | 2B15 | | | | | | | | | | | | 8 | | | | | |
| TX 9 | 2B41 | | | 2B36 | | | | | | | | | | | 53 | | | | | |
| TX 10 | 2B38 | | | 2B33 | | | | | | | | | | | 47 | | | | | |
| TX 11 | 2B35 | | | 2B30 | | | | | | | | | | | 41 | | | | | |
| TX 12 | 2B32 | | | 2B27 | | | | | | | | | | | 35 | | | | | |
| TX 13 | 2B28 | | | 2B24 | | | | | | | | | | | 25 | | | | | |
| TX 14 | 2B25 | | | 2B21 | | | | | | | | | | | 19 | | | | | |
| TX 15 | 2B22 | | | 2B18 | | | | | | | | | | | 13 | | | | | |
| TX 16 | 2B19 | | | 2B15 | | | | | | | | | | | 7 | | | | | |
| TX 17 | 2A15 | 2B15 | 2B12 | | | | | | | | | | | | | 44 | | | | |
| TX 18 | 2A12 | 2B12 | 2B9 | | | | | | | | | | | | | 38 | | | | |
| TX 19 | 2A9 | 2B9 | 2B6 | | | | | | | | | | | | | 32 | | | | |
| TX 20 | 2A6 | 2B6 | 1B44 | | | | | | | | | | | | | 26 | | | | |
| TX 21 | 1A44 | 1B44 | 1B41 | | | | | | | | | | | | | 16 | | | | |
| TX 22 | 1A41 | 1B41 | 1B38 | | | | | | | | | | | | | 10 | | | | |
| TX 23 | 1A38 | 1B38 | 1B35 | | | | | | | | | | | | | | 40 | | | |
| TX 24 | 1A35 | 1B35 | 1B32 | | | | | | | | | | | | | | 34 | | | |
| TX 25 | 2B15 | | | 2B12 | | | | | | | | | | | 43 | | | | | |
| TX 26 | 2B13 | | | 2B10 | | | | | | | | | | | 39 | | | | | |
| TX 27 | 2B11 | | | 2B8 | | | | | | | | | | | 35 | | | | | |

7-82

REVISIONS変更

Aloka

3RD ANGLE PROJECTION 第3角法

SCALE 尺度

UNITS 単位 mm

TITLE名称 Tx Rx unit

MOTHER BOARD

MODEL形名 EP-3466B

13/16

| DRAWN製図 | DESIGNED設計 | CHECKED検図 | APPD承認 |
|---|---|---|---|
| 企画G 92.9.10 | 企画G 92.9.10 | 企画G 92.9.18 | 92.9.18 |

DRAWING NO. 図番 MC 325934

| NO.11 | EP-3452 | EP-3455 | EP-3456 | EP-3457 | EP-3458 | EP-3460 | EP-3460 | EP-3459 | EP-3459 | EP-3461 | EP-3462 | EP-3463 | EP-3464 | EP-3465 | J180 | J183 | J186 | J121 | J131 | J189 |
|---|---|---|---|---|---|---|---|---|---|---|---|---|---|---|---|---|---|---|---|---|
| | PROBE CH | SELECTOR | TX 1 | TX 2 | PREAMP | RX FOCUS1 | RX FOCUS2 | RX FOCUS3 | RX FOCUS4 | AMP&C ITF | COLOR ITF | VBPF&GCONT | TX TRIG | ADR&TIM | J181 | J184 | J187 | J122 | | J190 |
| SIG | J-100 | J-101 | J-102 | J-103 | J-104 | J-105 | J-106 | J-107 | J-108 | J-109 | J-110 | J-111 | J-112 | J-113 | J182 | J185 | J188 | J123 | J132 | J191 |
| TX 28 | 2B9 | | | 2B6 | | | | | | | | | | | 01 | | | | | |
| TX 29 | 2B6 | | | 2B4 | | | | | | | | | | | 25 | | | | | |
| TX 30 | 2B4 | | | 1B43 | | | | | | | | | | | 21 | | | | | |
| TX 31 | 1B44 | | | 1B41 | | | | | | | | | | | 17 | | | | | |
| TX 32 | 1B42 | | | 1B39 | | | | | | | | | | | 13 | | | | | |
| TX 33 | 1A30 | | 1B29 | | | | | | | | | | | | 26 | | | | | |
| TX 34 | 1A28 | | 1B27 | | | | | | | | | | | | 22 | | | | | |
| TX 35 | 1A26 | | 1B25 | | | | | | | | | | | | 18 | | | | | |
| TX 36 | 1A24 | | 1B23 | | | | | | | | | | | | 14 | | | | | |
| TX 37 | 1A21 | | 1B21 | | | | | | | | | | | | 8 | | | | | |
| TX 38 | 1B21 | | 1B19 | | | | | | | | | | | | 11 | | | | | |
| TX 39 | 1A19 | | 1B17 | | | | | | | | | | | | 4 | | | | | |
| TX 40 | 1B19 | | 1B15 | | | | | | | | | | | | 7 | | | | | |
| TX 41 | 1B39 | | | 1B37 | | | | | | | | | | | 7 | | | | | |
| TX 42 | 1B37 | | | 1B35 | | | | | | | | | | | 3 | | | | | |
| TX 43 | 1B35 | | | 1B33 | | | | | | | | | | | 39 | | | | | |
| TX 44 | 1B33 | | | 1B31 | | | | | | | | | | | 35 | | | | | |
| TX 45 | 1B30 | | | 1B29 | | | | | | | | | | | 29 | | | | | |
| TX 46 | 1B28 | | | 1B27 | | | | | | | | | | | 25 | | | | | |
| TX 47 | 1B26 | | | 1B25 | | | | | | | | | | | 21 | | | | | |
| TX 48 | 1B24 | | | 1B23 | | | | | | | | | | | 17 | | | | | |
| TX 49 | 2A40 | 2B40 | 2B35 | | | | | | | | | | | | 52 | | | | | |
| TX 50 | 2A37 | 2B37 | 2B32 | | | | | | | | | | | | 46 | | | | | |
| TX 51 | 2A34 | 2B34 | 2B29 | | | | | | | | | | | | 40 | | | | | |
| TX 52 | 2A31 | 2B31 | 2B26 | | | | | | | | | | | | 34 | | | | | |
| TX 53 | 2A27 | 2B27 | 2B23 | | | | | | | | | | | | 24 | | | | | |
| TX 54 | 2A24 | 2B24 | 2B20 | | | | | | | | | | | | 18 | | | | | |
| TX 55 | 2A21 | 2B21 | 2B17 | | | | | | | | | | | | 12 | | | | | |
| TX 56 | 2A18 | 2B18 | 2B14 | | | | | | | | | | | | 6 | | | | | |
| TX 57 | 2B40 | | | 2B35 | | | | | | | | | | | 51 | | | | | |
| TX 58 | 2B37 | | | 2B32 | | | | | | | | | | | 45 | | | | | |
| TX 59 | 2B34 | | | 2B29 | | | | | | | | | | | 39 | | | | | |
| TX 60 | 2B31 | | | 2B26 | | | | | | | | | | | 33 | | | | | |
| TX 61 | 2B27 | | | 2B23 | | | | | | | | | | | 23 | | | | | |
| TX 62 | 2B24 | | | 2B20 | | | | | | | | | | | 17 | | | | | |
| TX 63 | 2B21 | | | 2B17 | | | | | | | | | | | 11 | | | | | |
| TX 64 | 2B18 | | | 2B14 | | | | | | | | | | | 5 | | | | | |
| TX 65 | 2A14 | 2B14 | 2B11 | | | | | | | | | | | | 42 | | | | | |
| TX 66 | 2A11 | 2B11 | 2B8 | | | | | | | | | | | | 36 | | | | | |
| TX 67 | 2A8 | 2B8 | 2B5 | | | | | | | | | | | | 30 | | | | | |
| TX 68 | 2A5 | 2B5 | 1B43 | | | | | | | | | | | | 24 | | | | | |
| TX 69 | 1A43 | 1B43 | 1B40 | | | | | | | | | | | | 14 | | | | | |
| TX 70 | 1A40 | 1B40 | 1B37 | | | | | | | | | | | | 8 | | | | | |

REVISIONS変更

Aloka

3RD ANGLE PROJECTION 第3角法

SCALE 尺度

UNITS 単位 mm

TITLE名称 Tx Rx unit MOTHER BOARD

| DRAWN製図 | DESIGNED設計 | CHECKED検図 | APPD承認 |
|---|---|---|---|
| 企画G '92.9.1. 近藤 | 企画G '92.9.1. 近藤 | 企画G 92.6.10 | 1技 '92.5.10 入江 |

MODEL形名 EP-3466B

DRAWING NO.図番 MC 325935

14/16

| NO.12 | EP-3452 | EP-3455 | EP-3456 | EP-3457 | EP-3458 | EP-3460 | EP-3460 | EP-3459 | EP-3459 | EP-3461 | EP-3462 | EP-3463 | EP-3464 | EP-3465 | J180 | J183 | J186 | J121 | J131 | J189 |
|---|---|---|---|---|---|---|---|---|---|---|---|---|---|---|---|---|---|---|---|---|
| | PROBE CH | SELECTOR | TX 1 | TX 2 | PREAMP | RX FOCUS1 | RX FOCUS2 | RX FOCUS3 | RX FOCUS4 | AMP&C ITF | COLOR ITF | VBPF&GCONT | TX TRIG | ADR&TIM | J181 | J184 | J187 | J122 | | J190 |
| SIG | J-100 | J-101 | J-102 | J-103 | J-104 | J-105 | J-106 | J-107 | J-108 | J-109 | J-110 | J-111 | J-112 | J-113 | J182 | J185 | J188 | J123 | J132 | J191 |
| TX 71 | 1A37 | 1B37 | 1B34 | | | | | | | | | | | | 38 | | | | | |
| TX 72 | 1A34 | 1B34 | 1B31 | | | | | | | | | | | | 32 | | | | | |
| TX 73 | 2B14 | | | 2B11 | | | | | | | | | | | 41 | | | | | |
| TX 74 | 2B12 | | | 2B9 | | | | | | | | | | | 37 | | | | | |
| TX 75 | 2B10 | | | 2B7 | | | | | | | | | | | 33 | | | | | |
| TX 76 | 2B8 | | | 2B5 | | | | | | | | | | | 29 | | | | | |
| TX 77 | 2B5 | | | 1B44 | | | | | | | | | | | 23 | | | | | |
| TX 78 | 2B3 | | | 1B42 | | | | | | | | | | | 19 | | | | | |
| TX 79 | 1B43 | | | 1B40 | | | | | | | | | | | 15 | | | | | |
| TX 80 | 1B41 | | | 1B38 | | | | | | | | | | | 11 | | | | | |
| TX 81 | 1A29 | | 1B28 | | | | | | | | | | | | 24 | | | | | |
| TX 82 | 1A27 | | 1B26 | | | | | | | | | | | | 20 | | | | | |
| TX 83 | 1A25 | | 1B24 | | | | | | | | | | | | 16 | | | | | |
| TX 84 | 1A23 | | 1B22 | | | | | | | | | | | | 12 | | | | | |
| TX 85 | 1A20 | | 1B20 | | | | | | | | | | | | 6 | | | | | |
| TX 86 | 1B20 | | 1B18 | | | | | | | | | | | | 9 | | | | | |
| TX 87 | 1A18 | | 1B16 | | | | | | | | | | | | 2 | | | | | |
| TX 88 | 1B18 | | 1B14 | | | | | | | | | | | | 5 | | | | | |
| TX 89 | 1B38 | | | 1B36 | | | | | | | | | | | 5 | | | | | |
| TX 90 | 1B36 | | | 1B34 | | | | | | | | | | | 1 | | | | | |
| TX 91 | 1B34 | | | 1B32 | | | | | | | | | | | 37 | | | | | |
| TX 92 | 1B32 | | | 1B30 | | | | | | | | | | | 33 | | | | | |
| TX 93 | 1B29 | | | 1B28 | | | | | | | | | | | 27 | | | | | |
| TX 94 | 1B27 | | | 1B26 | | | | | | | | | | | 23 | | | | | |
| TX 95 | 1B25 | | | 1B24 | | | | | | | | | | | 19 | | | | | |
| TX 96 | 1B23 | | | 1B22 | | | | | | | | | | | 15 | | | | | |
| TX 97 | 2A39 | 2B39 | 2B34 | | | | | | | | | | | | 50 | | | | | |
| TX 98 | 2A36 | 2B36 | 2B31 | | | | | | | | | | | | 44 | | | | | |
| TX 99 | 2A33 | 2B33 | 2B28 | | | | | | | | | | | | 38 | | | | | |
| TX100 | 2A30 | 2B30 | 2B25 | | | | | | | | | | | | 32 | | | | | |
| TX101 | 2A26 | 2B26 | 2B22 | | | | | | | | | | | | 22 | | | | | |
| TX102 | 2A23 | 2B23 | 2B19 | | | | | | | | | | | | 16 | | | | | |
| TX103 | 2A20 | 2B20 | 2B16 | | | | | | | | | | | | 10 | | | | | |
| TX104 | 2A17 | 2B17 | 2B13 | | | | | | | | | | | | 4 | | | | | |
| TX105 | 2B39 | | | 2B34 | | | | | | | | | | | 49 | | | | | |
| TX106 | 2B36 | | | 2B31 | | | | | | | | | | | 43 | | | | | |
| TX107 | 2B33 | | | 2B28 | | | | | | | | | | | 37 | | | | | |
| TX108 | 2B30 | | | 2B25 | | | | | | | | | | | 31 | | | | | |
| TX109 | 2B26 | | | 2B22 | | | | | | | | | | | 21 | | | | | |
| TX110 | 2B23 | | | 2B19 | | | | | | | | | | | 15 | | | | | |
| TX111 | 2B20 | | | 2B16 | | | | | | | | | | | 9 | | | | | |
| TX112 | 2B17 | | | 2B13 | | | | | | | | | | | 3 | | | | | |
| TX113 | 2A13 | 2B13 | 2B10 | | | | | | | | | | | | 40 | | | | | |

REVISIONS 変更

Aloka

TITLE 名称 Tx Rx unit
MOTHER BOARD

MODEL 形名
EP - 3466 B

15/16

3RD ANGLE PROJECTION 第3角法

SCALE 尺度

UNITS 単位 mm

DRAWN 製図 92.9.10 近藤

DESIGNED 設計 92.9.10 近藤

CHECKED 検図 92.9.10 島本

APPD 承認 92.9.10 入江

DRAWING NO. 図番
MC 325936

| NO.13 | EP-3452 | EP-3455 | EP-3456 | EP-3457 | EP-3458 | EP-3460 | EP-3460 | EP-3459 | EP-3459 | EP-3461 | EP-3462 | EP-3463 | EP-3464 | EP-3465 | J180 | J183 | J186 | J121 | J131 | J189 |
|---|---|---|---|---|---|---|---|---|---|---|---|---|---|---|---|---|---|---|---|---|
| | PROBE CH | SELECTOR | TX 1 | TX 2 | PREAMP | RX FOCUS1 | RX FOCUS2 | RX FOCUS3 | RX FOCUS4 | AMP&C ITF | COLOR ITF | VBPF&GCONT | TX TRIG | ADR&TIM | J181 | J184 | J187 | J122 | | J190 |
| SIG | J-100 | J-101 | J-102 | J-103 | J-104 | J-105 | J-106 | J-107 | J-108 | J-109 | J-110 | J-111 | J-112 | J-113 | J182 | J185 | J188 | J123 | J132 | J191 |
| TX114 | 2A10 | 2B10 | 2B7 | | | | | | | | | | | | 34 | | | | | |
| TX115 | 2A7 | 2B7 | 2B4 | | | | | | | | | | | | 28 | | | | | |
| TX116 | 2A4 | 2B4 | 1B42 | | | | | | | | | | | | 22 | | | | | |
| TX117 | 1A42 | 1B42 | 1B39 | | | | | | | | | | | | 12 | | | | | |
| TX118 | 1A39 | 1B39 | 1B36 | | | | | | | | | | | | 6 | | | | | |
| TX119 | 1A36 | 1B36 | 1B33 | | | | | | | | | | | | 36 | | | | | |
| TX120 | 1A33 | 1B33 | 1B30 | | | | | | | | | | | | 30 | | | | | |
| TXGATE 1 | | | | | | | | | | | | 1A29 | | 1A30 | | | | | | |
| TXOFF | | | | | | | | | | | | | 1A34 | 1A34 | | | | | | |
| TXSEL2 | | | | | | | | | | | | | 2A37 | 2A37 | | | | | | |
| TXSEL3 | | | | | | | | | | △ | | | 2B37 | 2B37 | | | | | | |
| USBLK | | | | | | | | | | ~~1A12~~ | | | | 2B31 | | | | 44 | | |
| USBLK/ | | | | 1A21 | | 1B18 | 1B18 | 1B18 | 1B18 | | | 1B36 | 1B18 | 1B19 | | | | | | 16 |
| V-CODE0 | | | | | | | | | | | | | | 2B32 | | | | 46 | | |
| V-CODE1 | | | | | | | | | | | | | | 2B33 | | | | 48 | | |
| VIDEOCODE1 | | | | | | | | | | 1B39 | | | | 1A19 | | | | | | |
| XA 0 | | | | | | 1B25 | | 1B25 | | | | | | | | | | | | |
| XA 1 | | | | | | 1A26 | | 1A26 | | | | | | | | | | | | |
| XA 2 | | | | | | 1B26 | | 1B26 | | | | | | | | | | | | |
| XA 3 | | | | | | 1A27 | | 1A27 | | | | | | | | | | | | |
| XB 0 | | | | | | | 1B25 | | 1B25 | | | | | | | | | | | |
| XB 1 | | | | | | | 1A26 | | 1A26 | | | | | | | | | | | |
| XB 2 | | | | | | | 1B26 | | 1B26 | | | | | | | | | | | |
| XB 3 | | | | | | | 1A27 | | 1A27 | | | | | | | | | | | |
| YSA 0 | | | | | | 1A37 | | 1A37 | | | | | | | | | | | | |
| YSA 1 | | | | | | 1B37 | | 1B37 | | | | | | | | | | | | |
| YSA 2 | | | | | | 1A36 | | 1A36 | | | | | | | | | | | | |
| YSB 0 | | | | | | | 1A37 | | 1A37 | | | | | | | | | | | |
| YSB 1 | | | | | | | 1B37 | | 1B37 | | | | | | | | | | | |
| YSB 2 | | | | | | | 1A36 | | 1A36 | | | | | | | | | | | |
| ZIRQ | | | | | | | | | | | | | | 2B18 | | | | 18 | | |
| △ OS GATE | | | | | | | | | | △1A12 | | | | △1B20 | | | | | | |

REVISIONS 変更
△ 不良の対策 作品 1枚 - M2197

Aloka

TITLE 名称 Tx Rx unit
MOTHER BOARD

MODEL 形名 EP-3466 B

16/16

3RD ANGLE PROJECTION 第3角法

SCALE 尺度

UNITS 単位 mm

| DRAWN 製図 | DESIGNED 設計 | CHECKED 検図 | APPD 承認 |
|---|---|---|---|
| 企画G 92.9.10 近藤 | 企画G 92.9.10 近藤 | 企画 92.8.10 島本 | 1段 92.9.10 入江 |

DRAWING NO. 図番 MC 325937

L 013 10 82 A3

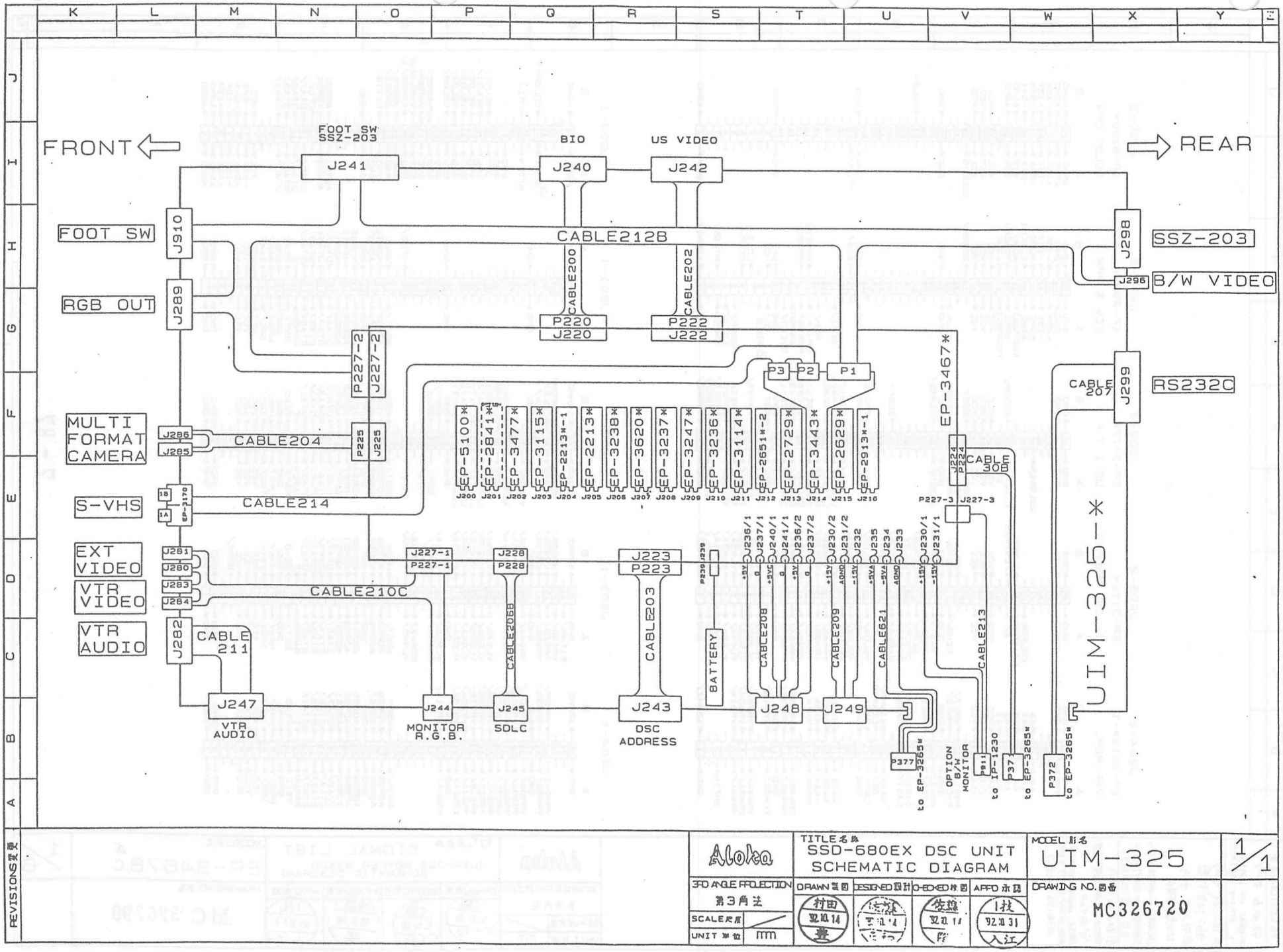
FRONT
REAR
FOOT SW SSZ-203
BIO
US VIDEO
J241
J240
J242
FOOT SW
J910
RGB OUT
J289
CABLE212B
CABLE200
CABLE202
P220
J220
P222
J222
J298
SSZ-203
J296
B/W VIDEO
P227-2
J227-2
P3
P2
P1
EP-3467*
CABLE 207
J299
RS232C
MULTI FORMAT CAMERA
J286
J285
CABLE204
P225
J225
EP-5100*
EP-2841*
EP-3477*
EP-3115*
EP-2213*-1
EP-2213*
EP-3238*
EP-3620*
EP-3237*
EP-3247*
EP-3236*
EP-3114*
EP-2651*-2
EP-2729*
EP-3443*
EP-2629*
EP-2913*-1
J224
P224
CABLE 308
S-VHS
CABLE214
P227-3
J227-3
EXT VIDEO
VTR VIDEO
VTR AUDIO
J281
J280
J283
J284
J282
CABLE 211
J227-1
P227-1
J228
P228
J223
P223
CABLE210C
CABLE206B
CABLE203
BATTERY
CABLE208
CABLE209
CABLE621
CABLE213
UIM-325-*
J247
VTR AUDIO
J244
MONITOR R.G.B.
J245
SDLC
J243
DSC ADDRESS
J248
J249
P377
to EP-3265*
OPTION B/W MONITOR
P911
to IP-1230
P371
to EP-3265*
P372
to EP-3265*
REVISIONS変更
Aloka
TITLE名称
SSD-680EX DSC UNIT
SCHEMATIC DIAGRAM
MODEL形名
UIM-325
1/1
3RD ANGLE PROJECTION
第3角法
SCALE尺度
UNIT単位
mm
DRAWN 製図
DESIGNED 設計
CHECKED 検図
APPD 承認
DRAWING NO. 図番
MC326720

REVISIONS変更

92.10.6 サトウ
SSD-HBDEX MW-28022 #1～
STD MW-24007 #1～

△ 92.10.29 サトウ
カラーLAZ対応

△ 92.11.5 サトウ
ECG表示不具合

HBDEX MW-28022 #1～
HBDSTD MW-24007 #1～
作指 1枚-MZ197

△ 93.1.26 サトウ
HBDSTD EXT VID 切替不具合
"C"バージョン
HBDEX MW-25520 #1～
HBDSTD MW-24007 #1～
作指1枚-MZ261

| | |
|---|---|
| SCALE/縮尺 | UNIT/単位 mm |
| DRAWN/製図 | 佐藤 92.10.08 |
| DESIGNED/設計 | 佐藤 92.10.08 |
| CHECKED/承認 | 佐藤一 92.10.08 |
| APPD/承認 | 佐藤 92.10.08 |
| 3D ANGLE PROJECTION | 第3角法 |
| TITLE/名称 | SIGNAL LIST (UIM-325 MOTHER BOARD SCHEMATIC DIAGRAM) |
| MODEL/形名 | EP-3467B,C △ |
| DRAWING NO./図番 | MC 326799 |
| | 1/6 |

## J204-2
EP-2213※-1
VAR.MEM.

| A | | B |
|---|---|---|
| GND | 45 | GND |
| GND | 44 | GND |
| | 43 | |
| | 42 | |
| A8 | 41 | A9 |
| A6 | 40 | A7 |
| A4 | 39 | A5 |
| A2 | 38 | A3 |
| A0 | 37 | A1 |
| VCC | 36 | VCC |
| VCC | 35 | VCC |
| VCC | 34 | VCC |
| | 33 | |
| MWE6/ | 32 | MWE7/ |
| MWE4/ | 31 | MWE5/ |
| GND | 30 | GND |
| MWE2/ | 29 | MWE3/ |
| MWE0/ | 28 | MWE1/ |
| | 27 | |
| CAS3/ | 26 | CAS4/ |
| CAS1/ | 25 | CAS2/ |
| | 24 | |
| DAV/ | 23 | WINHR/ |
| OE/ | 22 | CINVID/ |
| LSR/ | 21 | RASA |
| GND | 20 | GND |
| | 19 | |
| MA2B | 17 | MA3B |
| MA0B | 16 | MA1B |
| MA2A | 15 | MA3A |
| MA0A | 14 | MA1A |
| | 13 | |
| VRW4B/ | 12 | VRW5B/ |
| VRW2B/ | 11 | VRW3B/ |
| GND | 10 | GND |
| VRW0B/ | 9 | VRW1B/ |
| | 8 | |
| VRW4A/ | 7 | VRW5A/ |
| VRW2A/ | 6 | VRW3A/ |
| VRW0A/ | 5 | VRW1A/ |
| | 4 | |
| SHFEN | 3 | |
| | 2 | |
| GND | 1 | 12MHZ/ |

## J203-2
EP-3115※
C-LINE BUFFER

| A | | B |
|---|---|---|
| GND | 45 | GND |
| GND | 44 | GND |
| | 43 | |
| | 42 | |
| | 41 | |
| COLERS | 40 | |
| COLOREN | 39 | B/WEN |
| ER | 38 | FLWAREA |
| | 37 | |
| VCC | 36 | VCC |
| VCC | 35 | VCC |
| VCC | 34 | VCC |
| | 33 | |
| | 32 | MCLK |
| FEND/ | 31 | MEND/ |
| GND | 30 | GND |
| WRGT/ | 29 | B/WINH/ |
| WRTA/ | 28 | SWPON |
| CLRM/ | 27 | CLRLB/ |
| OFSCR/ | 26 | LDLB/ |
| DTSTB/ | 25 | FIFMTY |
| VARD4/ | 24 | VARD5/ |
| VARD2/ | 23 | VARD3/ |
| | 22 | |
| VELD4/ | 21 | VELD5/ |
| GND | 20 | GND |
| VELD2/ | 19 | VELD3/ |
| VELD0/ | 18 | VELD1/ |
| FLWCT/ | 17 | SELB |
| VRW4B/ | 16 | VRW5B/ |
| VRW2B/ | 15 | VRW3B/ |
| VRW0B/ | 14 | VRW1B/ |
| VRW4A/ | 13 | VRW5A/ |
| VRW2A/ | 12 | VRW3A/ |
| VRW0A/ | 11 | VRW1A/ |
| GND | 10 | GND |
| | 9 | |
| VLW4B/ | 8 | VLW5B/ |
| VLW2B/ | 7 | VLW3B/ |
| VLW0B/ | 6 | VLW1B/ |
| VLW4A/ | 5 | VLW5A/ |
| VLW2A/ | 4 | VLW3A/ |
| VLW0A/ | 3 | VLW1A/ |
| WINHR/ | 2 | WINHL/ |
| GND | 1 | 12MHZ/ |

## J202-2
EP-3477※
US I.T.F.

| A | | B |
|---|---|---|
| GND | 45 | GND |
| GND | 44 | GND |
| | 43 | |
| | 42 | |
| COLOREN | 41 | |
| | 40 | |
| | 39 | |
| CINON/ | 38 | ECGON/ |
| ER | 37 | |
| VCC | 36 | VCC |
| VCC | 35 | VCC |
| VCC | 34 | VCC |
| ENBSY/ | 33 | 525/ |
| RTCON/ | 32 | |
| MCLK | 31 | MEND/ |
| GND | 30 | GND |
| MDWEN/ | 29 | EERAS/ |
| | 28 | |
| | 27 | |
| | 26 | |
| | 25 | |
| | 24 | ECGF/ |
| | 23 | |
| | 22 | |
| EFAM | 21 | TRACE/ |
| GND | 20 | GND |
| | 19 | |
| VCDO/ | 18 | VCD1/ |
| USBLK/ | 17 | DFAREA |
| LSTAT/ | 16 | FREND/ |
| DSCA8/ | 15 | |
| DSCA6/ | 14 | DSCA7/ |
| DSCA4/ | 13 | DSCA5/ |
| DSCA2/ | 12 | DSCA3/ |
| DSCA0/ | 11 | DSCA1/ |
| GND | 10 | GND |
| 1F80/ | 9 | HD/ |
| 1E80/ | 8 | |
| 1C00/ | 7 | YMINS/ |
| YPLUS/ | 6 | |
| XMINS/ | 5 | FREZ/ |
| XPLUS/ | 4 | BFRZ/ |
| | 3 | MFREZ/ |
| 1C80/ | 2 | BFREZ/ |
| GND | 1 | 12MHZ/ |

## J201-2
EP-2841※
ECG & PPM

| A | | B |
|---|---|---|
| GND | 45 | GND |
| GND | 44 | GND |
| +15V | 43 | +15V |
| -15V | 42 | -15V |
| AGND | 41 | AGND |
| AGND | 40 | ECGCH1 |
| ECGPOSI | 39 | AGND |
| AGND | 38 | PCGCH1 |
| PCGPOSI | 37 | AGND |
| VCC | 36 | VCC |
| VCC | 35 | VCC |
| VCC | 34 | VCC |
| | 33 | ECGON/ |
| | 32 | |
| MCLK | 31 | |
| GND | 30 | GND |
| | 29 | |
| | 28 | |
| | 27 | |
| | 26 | |
| | 25 | |
| | 24 | |
| | 23 | |
| | 22 | |
| | 21 | |
| GND | 20 | GND |
| | 19 | 525/ |
| | 18 | |
| BFRZ/ | 17 | |
| | 16 | |
| PPM/ | 15 | |
| PPMIN/ | 14 | PPMEN/ |
| PPMIN/ | 13 | PPMEN/ |
| SWPON | 12 | |
| OVECG/ | 11 | |
| GND | 10 | GND |
| VD/ | 9 | HD/ |
| △ FIELD | 8 | |
| | 7 | LDLB/ |
| | 6 | ECGF/ |
| | 5 | |
| MDWEN/ | 4 | |
| LDLB/ | 3 | RTCON/ |
| SWPON | 2 | |
| GND | 1 | 12MHZ/ |

## J200-2
EP-5100※
COLOR CFM

| A | | B |
|---|---|---|
| AGND | 45 | AGND |
| AGND | 44 | AGND |
| +15V | 43 | +15V |
| -15V | 42 | -15V |
| +5VA | 41 | +5VA |
| -5VA | 40 | -5VA |
| SIN | 39 | AGND |
| COS | 38 | AGND |
| | 37 | |
| VCC | 36 | VCC |
| VCC | 35 | VCC |
| VCC | 34 | VCC |
| COLERS | 33 | |
| | 32 | |
| | 31 | |
| GND | 30 | GND |
| | 29 | |
| | 28 | |
| | 27 | COLEN |
| | 26 | |
| | 25 | |
| | 24 | |
| | 23 | |
| | 22 | |
| | 21 | |
| GND | 20 | GND |
| DCLR/ | 19 | |
| | 18 | |
| | 17 | |
| | 16 | |
| | 15 | |
| | 14 | |
| | 13 | |
| | 12 | |
| GND | 11 | GND |
| | 10 | |
| | 9 | |
| | 8 | |
| | 7 | |
| | 6 | |
| | 5 | |
| | 4 | |
| | 3 | |
| | 2 | |
| AGND | 1 | AGND |

## J204-1

| A | | B |
|---|---|---|
| GND | 45 | 12MHZ |
| | 44 | |
| | 43 | |
| VRMD4/ | 42 | VRMD5/ |
| VRMD2/ | 41 | VRMD3/ |
| GND | 40 | GND |
| VRMD0/ | 39 | VRMD1/ |
| VRSD4/ | 38 | VRSD5/ |
| VRSD2/ | 37 | VRSD3/ |
| VRSD0/ | 36 | VRSD1/ |
| VRS4B/ | 35 | VRS5B/ |
| VRS2B/ | 34 | VRS3B/ |
| VRS0B/ | 33 | VRS1B/ |
| VRS4A/ | 32 | VRS5A/ |
| VRS2A/ | 31 | VRS3A/ |
| GND | 30 | GND |
| VRS0A/ | 29 | VRS1A/ |
| | 28 | |
| | 27 | |
| | 26 | |
| | 25 | |
| | 24 | |
| MRQT/ | 23 | MRDY |
| ADRS8 | 22 | ADRS9 |
| ADRS6 | 21 | ADRS7 |
| GND | 20 | GND |
| ADRS4 | 19 | ADRS5 |
| ADRS2 | 18 | ADRS3 |
| ADRS0 | 17 | ADRS1 |
| DTA6/ | 16 | DTA7/ |
| DTA4/ | 15 | DTA5/ |
| DTA2/ | 14 | DTA3/ |
| DTA0/ | 13 | DTA1/ |
| RAMEN | 12 | E |
| RST/ | 11 | READ |
| GND | 10 | GND |
| HRQ/ | 9 | HAK/ |
| IRQ/ | 8 | IAK/ |
| VCC | 7 | VCC |
| VCC | 6 | VCC |
| VCC | 5 | VCC |
| | 4 | |
| | 3 | |
| GND | 2 | GND |
| GND | 1 | GND |

## J203-1

| A | | B |
|---|---|---|
| GND | 45 | 12MHZ |
| BITMP/ | 44 | |
| VRS4B/ | 43 | VRS5B/ |
| VRS2B/ | 42 | VRS3B/ |
| VRS0B/ | 41 | VRS1B/ |
| GND | 40 | GND |
| VRS4A/ | 39 | VRS5A/ |
| VRS2A/ | 38 | VRS3A/ |
| VRS0A/ | 37 | VRS1A/ |
| | 36 | |
| VLS4B/ | 35 | VLS5B/ |
| VLS2B/ | 34 | VLS3B/ |
| VLS0B/ | 33 | VLS1B/ |
| VLS4A/ | 32 | VLS5A/ |
| VLS2A/ | 31 | VLS3A/ |
| GND | 30 | GND |
| VLS0A/ | 29 | VLS1A/ |
| DMARQ/ | 28 | BOFF/ |
| | 27 | EA8/ |
| BDMA2/ | 26 | BDMA3/ |
| VLMWG/ | 25 | VRMWG/ |
| | 24 | |
| MRQT/ | 23 | MRDY |
| ADRS8 | 22 | ADRS9 |
| ADRS6 | 21 | ADRS7 |
| GND | 20 | GND |
| ADRS4 | 19 | ADRS5 |
| ADRS2 | 18 | ADRS3 |
| ADRS0 | 17 | ADRS1 |
| DTA6/ | 16 | DTA7/ |
| DTA4/ | 15 | DTA5/ |
| DTA2/ | 14 | DTA3/ |
| DTA0/ | 13 | DTA1/ |
| RAMEN | 12 | E |
| RST/ | 11 | READ |
| GND | 10 | GND |
| HRQ/ | 9 | HAK/ |
| IRQ/ | 8 | IAK/ |
| VCC | 7 | VCC |
| VCC | 6 | VCC |
| VCC | 5 | VCC |
| | 4 | BFRZ/ |
| | 3 | |
| GND | 2 | GND |
| GND | 1 | GND |

## J202-1

| A | | B |
|---|---|---|
| GND | 45 | 12MHZ |
| | 44 | |
| SWPON | 43 | SWPON/ |
| DFARE | 42 | LDLB/ |
| | 41 | LEN/ |
| GND | 40 | GND |
| VTRON/ | 39 | |
| | 38 | |
| XCONT/ | 37 | YCONT/ |
| LADR2 | 36 | LADR3 |
| LADR0 | 35 | LADR1 |
| LDAT6/ | 34 | LDAT7/ |
| LDAT4/ | 33 | LDAT5/ |
| LDAT2/ | 32 | LDAT3/ |
| LDAT0/ | 31 | LDAT1/ |
| GND | 30 | GND |
| | 29 | BOFF/ |
| BON/ | 28 | CFO/ |
| FB0/ | 27 | |
| | 26 | |
| FEND/ | 25 | |
| | 24 | |
| MRQT/ | 23 | MRDY |
| ADRS8 | 22 | ADRS9 |
| ADRS6 | 21 | ADRS7 |
| GND | 20 | GND |
| ADRS4 | 19 | ADRS5 |
| ADRS2 | 18 | ADRS3 |
| ADRS0 | 17 | ADRS1 |
| DTA6/ | 16 | DTA7/ |
| DTA4/ | 15 | DTA5/ |
| DTA2/ | 14 | DTA3/ |
| DTA0/ | 13 | DTA1/ |
| RAMEN | 12 | E |
| RST/ | 11 | READ |
| GND | 10 | GND |
| HRQ/ | 9 | HAK/ |
| IRQ/ | 8 | IAK/ |
| VCC | 7 | VCC |
| VCC | 6 | VCC |
| VCC | 5 | VCC |
| | 4 | |
| | 3 | |
| GND | 2 | GND |
| GND | 1 | GND |

## J201-1

| A | | B |
|---|---|---|
| GND | 45 | 12MHZ |
| | 44 | |
| | 43 | |
| | 42 | |
| | 41 | |
| GND | 40 | GND |
| | 39 | |
| | 38 | |
| | 37 | |
| | 36 | |
| | 35 | |
| | 34 | |
| | 33 | |
| | 32 | |
| | 31 | |
| GND | 30 | GND |
| | 29 | |
| | 28 | |
| | 27 | |
| | 26 | |
| | 25 | 1F00/ |
| | 24 | |
| MRQT/ | 23 | MRDY |
| ADRS8 | 22 | ADRS9 |
| ADRS6 | 21 | ADRS7 |
| GND | 20 | GND |
| ADRS4 | 19 | ADRS5 |
| ADRS2 | 18 | ADRS3 |
| ADRS0 | 17 | ADRS1 |
| DTA6/ | 16 | DTA7/ |
| DTA4/ | 15 | DTA5/ |
| DTA2/ | 14 | DTA3/ |
| DTA0/ | 13 | DTA1/ |
| RAMEN | 12 | E |
| RST/ | 11 | READ |
| GND | 10 | GND |
| HRQ/ | 9 | HAK/ |
| IRQ/ | 8 | IAK/ |
| VCC | 7 | VCC |
| VCC | 6 | VCC |
| VCC | 5 | VCC |
| | 4 | |
| | 3 | |
| GND | 2 | GND |
| GND | 1 | GND |

## J200-1

| A | | B |
|---|---|---|
| AGND | 45 | AGND |
| | 44 | |
| | 43 | |
| | 42 | |
| △ SCLK | 41 | COLORGT |
| GND | 40 | |
| MTIEN | 39 | DFZ/ |
| | 38 | |
| GND | 37 | |
| GND | 36 | |
| GND | 35 | VELD0/ |
| GND | 34 | VELD1/ |
| GND | 33 | VELD2/ |
| GND | 32 | VELD3/ |
| GND | 31 | VELD4/ |
| GND | 30 | VELD5/ |
| GND | 29 | |
| GND | 28 | ~~VARB2/~~ |
| GND | 27 | ~~VARB3/~~ |
| GND | 26 | VARD4/ 2/ |
| GND | 25 | VARD5/ 3/ |
| GND | 24 | VARP4/ |
| GND | 23 | VARP5/ |
| GND | 22 | DTSTB/ |
| GND | 21 | |
| GND | 20 | GND |
| | 19 | |
| | 18 | |
| | 17 | |
| ADRS1 | 16 | ADRS0 |
| ADRS3 | 15 | ADRS2 |
| | 14 | CFO/ |
| DTA6/ | 13 | DTA7/ |
| DTA4/ | 12 | DTA5/ |
| DTA2/ | 11 | DTA3/ |
| DTA0/ | 10 | DTA1/ |
| | 9 | |
| | 8 | |
| VCC | 7 | VCC |
| -5VA | 6 | -5VA |
| +5VA | 5 | +5VA |
| -15V | 4 | -15V |
| +15V | 3 | +15V |
| AGND | 2 | AGND |
| AGND | 1 | AGND |

REVISIONS変更

| A | B | C | D | E | F | G | H | I | J |
|---|---|---|---|---|---|---|---|---|---|

## J209-2
EP-3247*
B/W MEM.

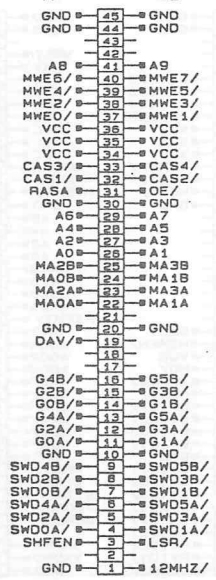


## J208-2
EP-3237*
B/W CINE MEM.

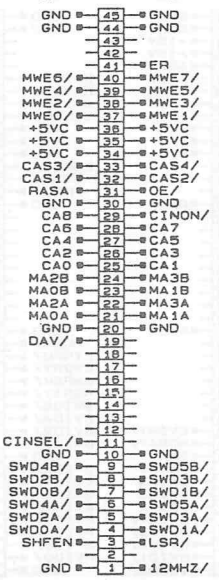


## J207-2
EP-3620*
TIMING

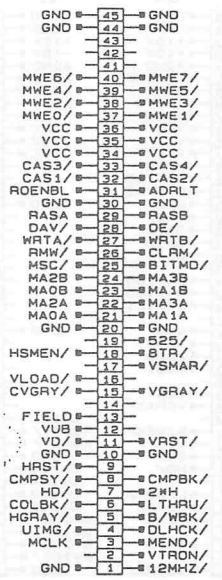


## J206-2
EP-3238*
COL.CINE MEM.

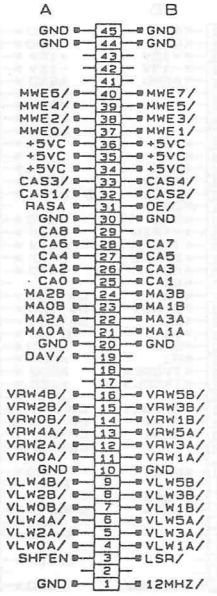


## J205-2
EP-2213*
VEL.MEM.

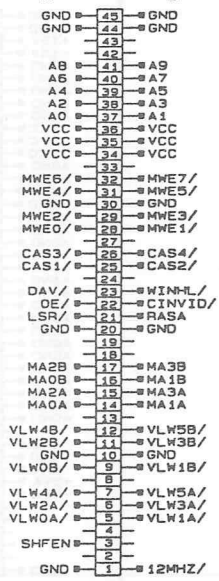


## J209-1

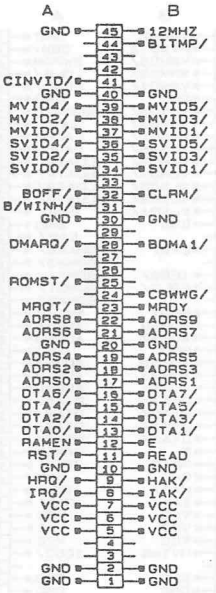


## J208-1

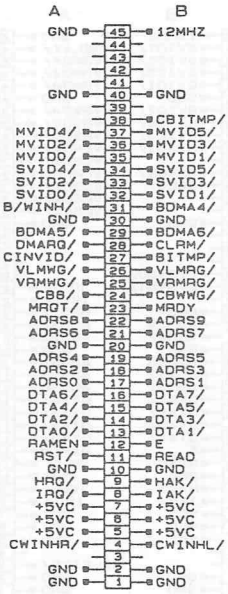


## J207-1

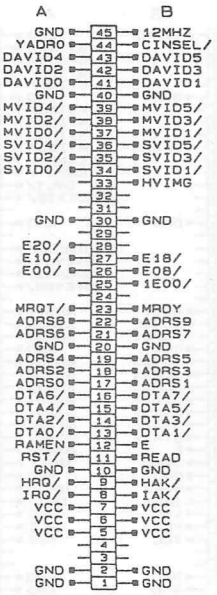


## J206-1

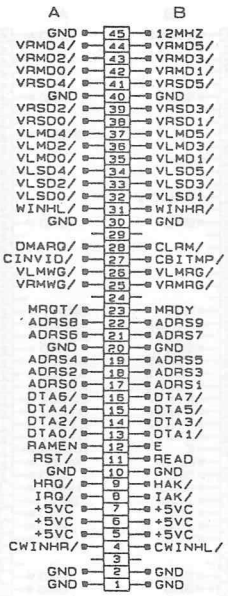


## J205-1

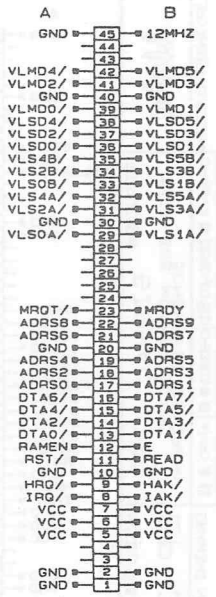


UNIT 単位: mm
SCALE 尺度:
3D ANGLE PROJECTION 第3角法

Alpha

TITLE 名称: SIGNAL LIST (UIM-325 MOTHER BOARD SCHEMATIC DIAGRAM)

DRAWN 製図 宝藤 91.10.08 正寿
DESIGNED 設計 宝藤 91.10.08 正寿
APPD. 承認 佐藤 91.10.08 隆
技 91.12.3 入江

MODEL 形名: EP-3467B,C
DRAWING NO. 図番: MC 326800
2/6

REVISIONS変更

△ 93.1.26 サトウ
68DSTP BITVP セロ番不明合
"C" バージョン

J214-2
EP-3443※
VIDEO I.T.F.

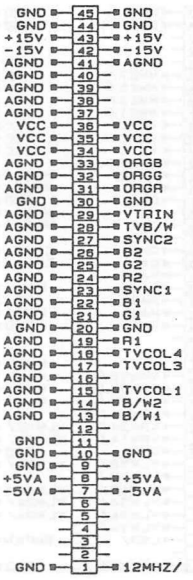


J213-2
EP-2729※
B/W A/D D/A

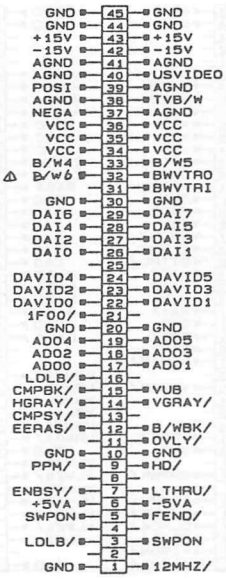


J212-2
EP-2651※
COLOR D/A

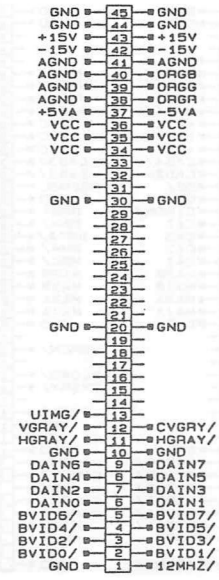


J211-2
EP-3114※
C-POST PROCESS

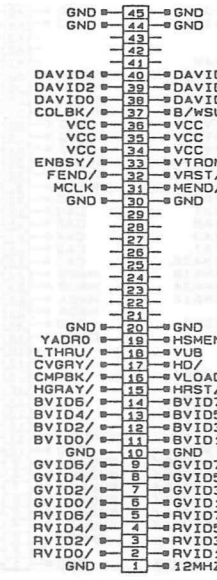


J210-2
EP-3236※
ADDRESS

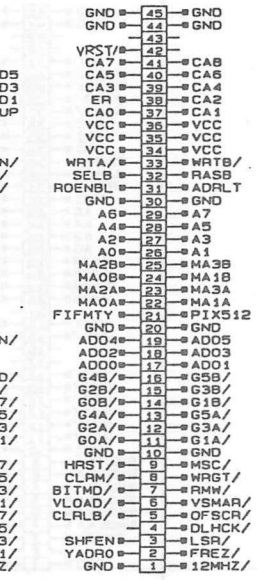


J214-1

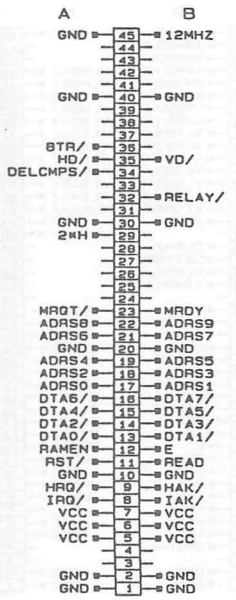


J213-1

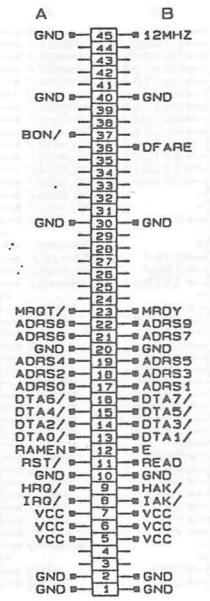


J212-1

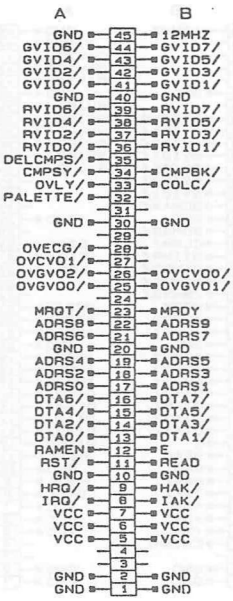


J211-1

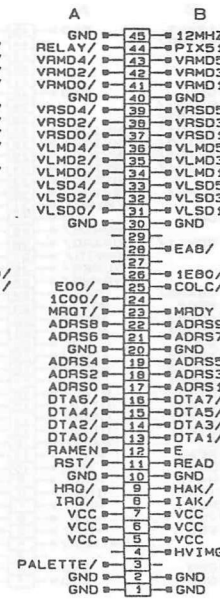


J210-1

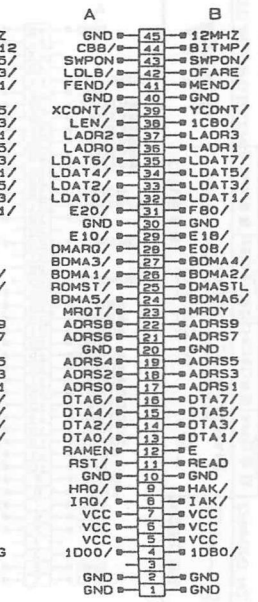


| | |
|---|---|
| UNIT 単位 | mm |
| SCALE 尺度 | 第3角法 |
| | 3D ANGLE PROJECTION |
| DRAWN 製図 | 三橋 93.10.06 正寸 |
| DESIGNED 設計 | 三橋 93.10.06 正寸 |
| CHECKED 検図 | 15 橋 93.10.08 隆 |
| APPD 承認 | 1橋 93.12.7 入江 |
| TITLE 名称 | SIGNAL LIST (UIM-325 MOTHER BOARD SCHEMATIC DIAGRAM) |
| MODEL 形名 | EP-3467B,C^A |
| DRAWING NO. 図番 | MC 326801 |
| | 3/6 |

7-89

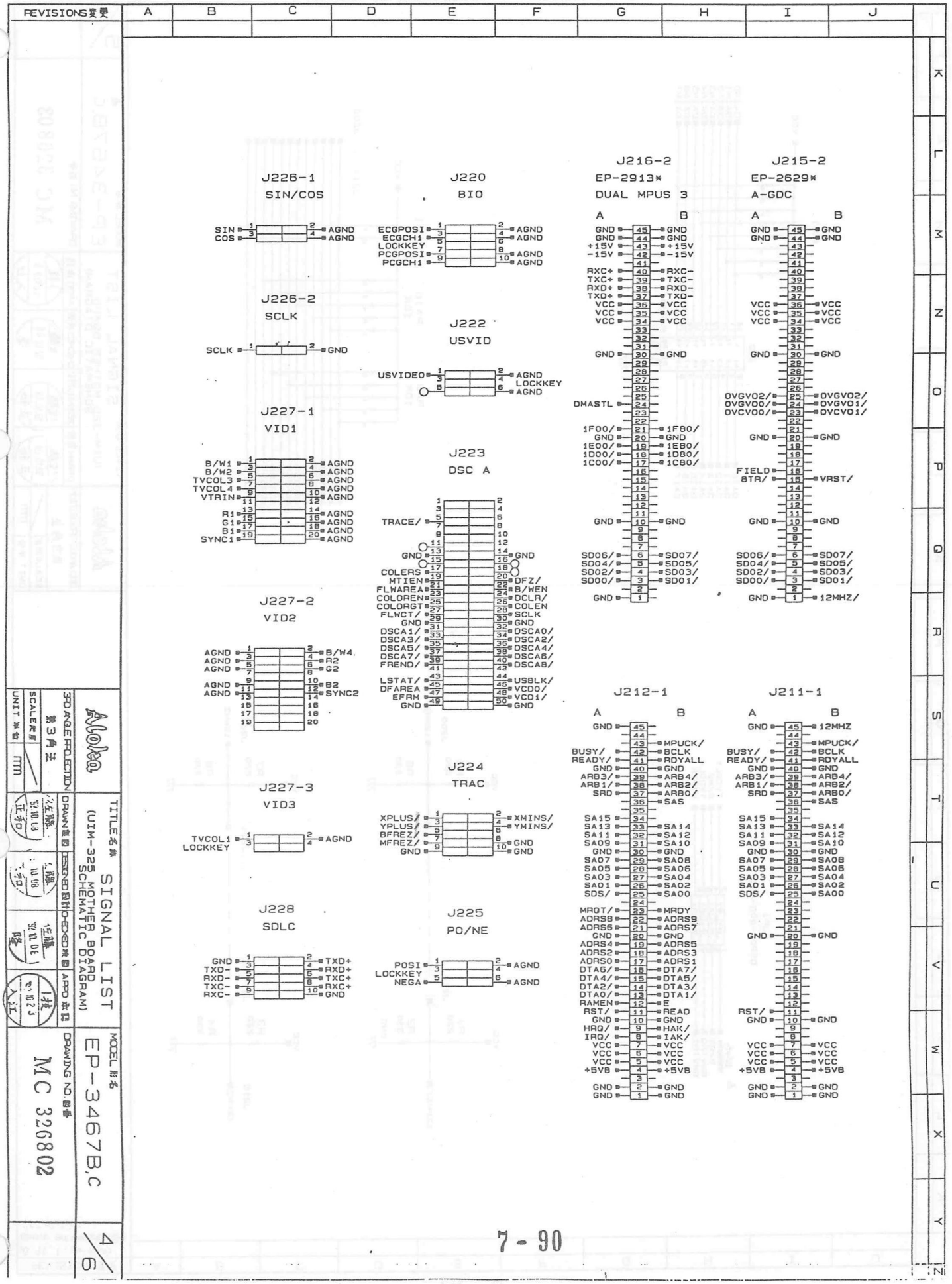
REVISIONS変更
J226-1
SIN/COS
J226-2
SCLK
J227-1
VID1
J227-2
VID2
J227-3
VID3
J228
SDLC
J220
BIO
J222
USVID
J223
DSC A
J224
TRAC
J225
PO/NE
J216-2
EP-2913*
DUAL MPUS 3
J215-2
EP-2629*
A-GDC
J212-1
J211-1
Aloka
3D ANGLE PROJECTION
第3角法
SCALE尺度
UNIT単位
mm
TITLE名称
SIGNAL LIST
(UIM-325 MOTHER BOARD SCHEMATIC DIAGRAM)
DRAWN
DESIGNED
CHECKED
APPD
MODEL形名
EP-3467B,C
DRAWING NO.
MC 326802
4/6

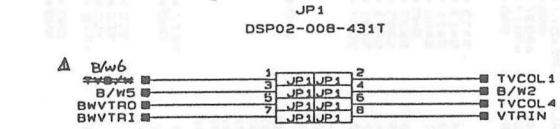


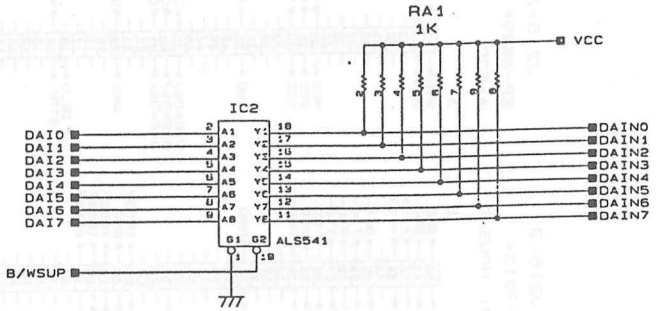

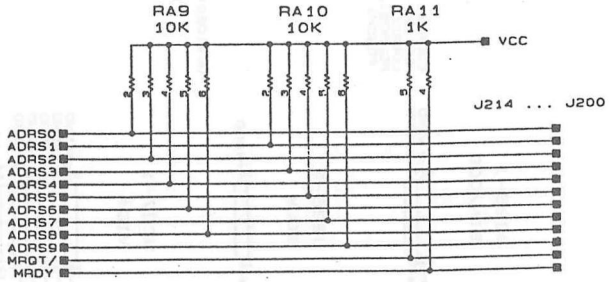


| | | | | | | |
|---|---|---|---|---|---|---|
| REVISIONS変更 △ 93.1.26 ﾏｲﾗ 誤SSTP 訂VIDEO 2点追加 "C","ﾏ","ｷ"ﾄｺﾛ | Aloka | TITLE名称 SIGNAL LIST (UIM-325 MOTHER BOARD SCHEMATIC DIAGRAM) | MODEL 形名 EP-3467B,C △ | 5/6 | | |
| | 3RD ANGLE PROJECTION 第3角法 | DRAWN 製図 佐藤 92.10.08 正和 | DESIGNED 設計 佐藤 92.10.08 正和 | CHECKED 検図 佐藤 92.10.08 | APPD 承認 1技 92.10.23 入江 | DRAWING NO. 図番 MC 326803 |
| | SCALE 尺度 | | | | | |
| | UNIT 単位 mm | | | | | |

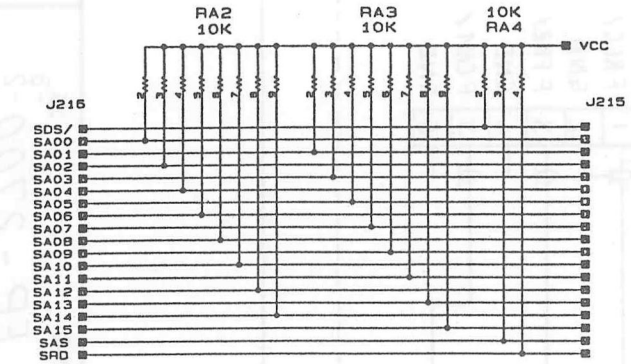


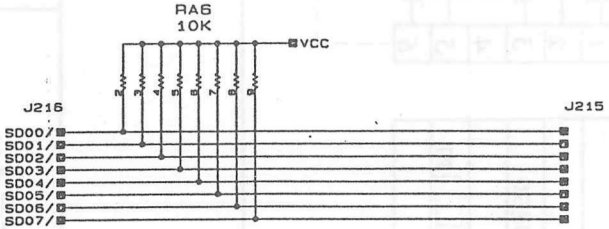


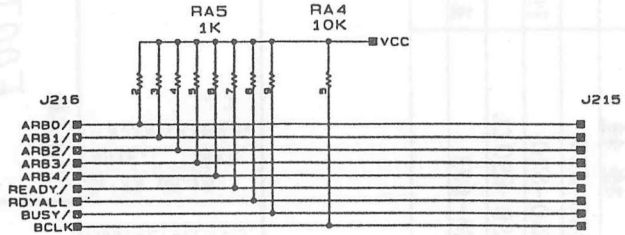


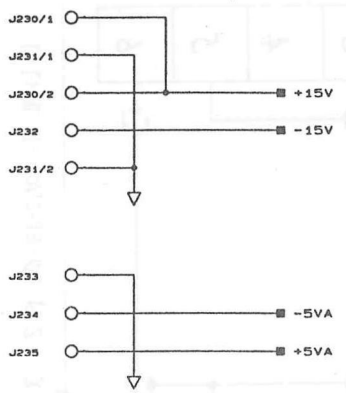


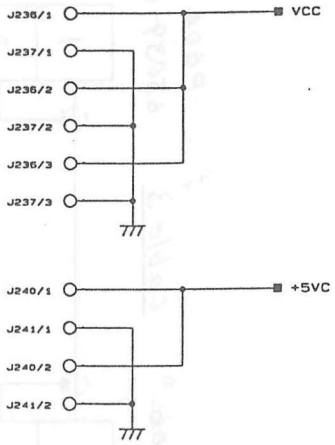


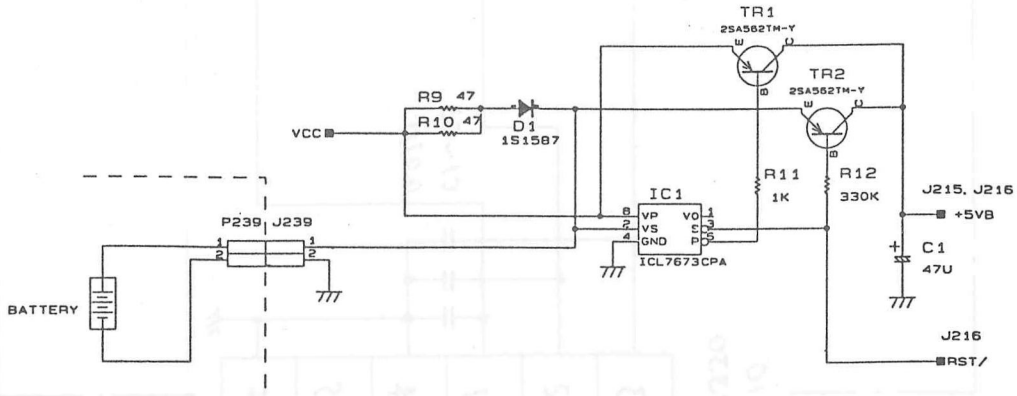


| | | | | | |
|---|---|---|---|---|---|
| Aloha | TITLE 名称 SIGNAL LIST (UIM-325 MOTHER BOARD SCHEMATIC DIAGRAM) | | | MODEL 形名 EP-3467BC | 6/6 |
| 3RD ANGLE PROJECTION 第3角法 | DRAWN 製図 佐藤 92.10.08 | DESIGNED 設計 佐藤 92.10.08 | CHECKED 検図 佐藤 92.12.08 | APPD 承認 | DRAWING NO. 図番 MC 326804 |
| SCALE 尺度 | | | | | |
| UNIT 単位 mm | | | | | |

REVISIONS 変更

7-92

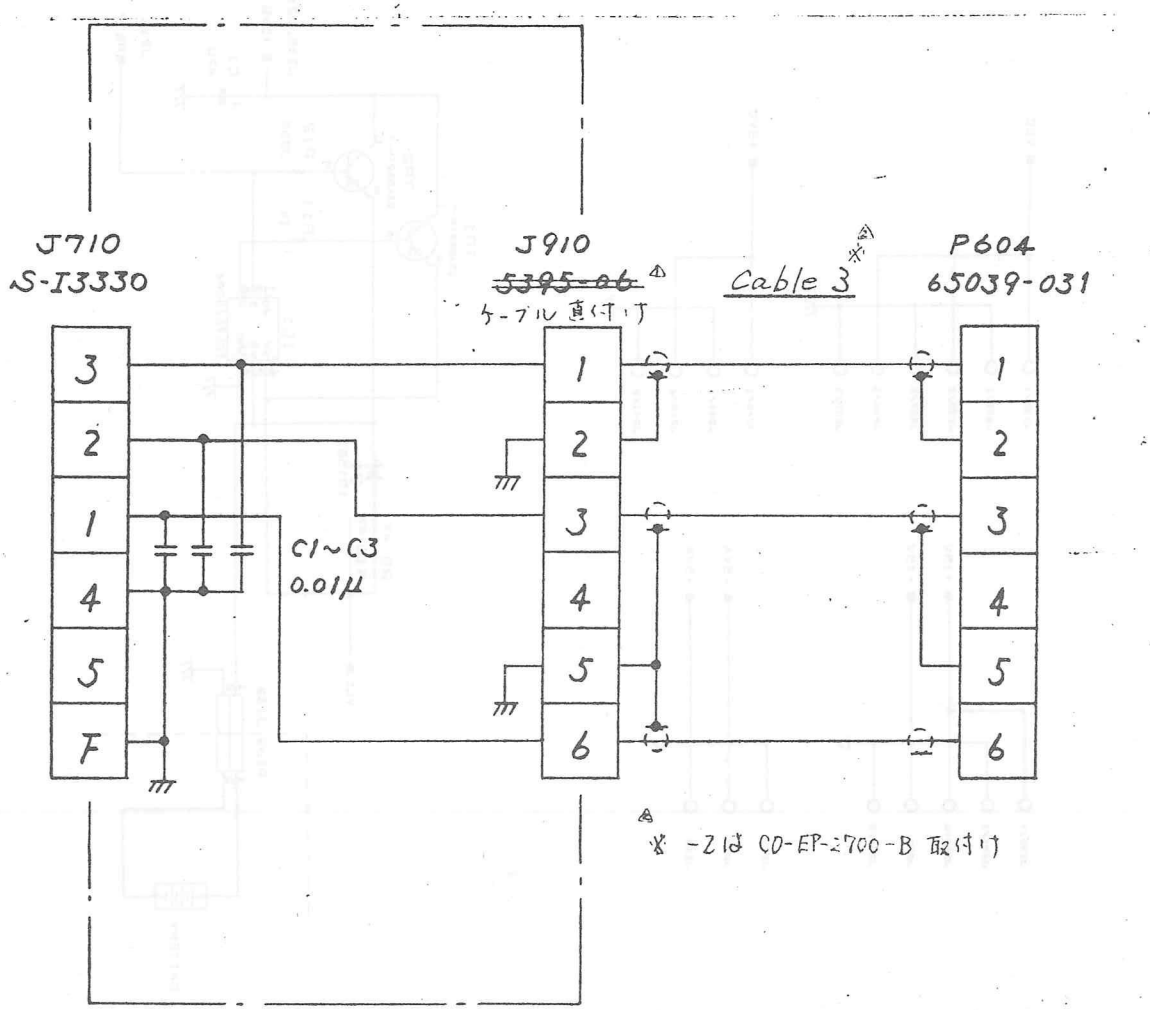


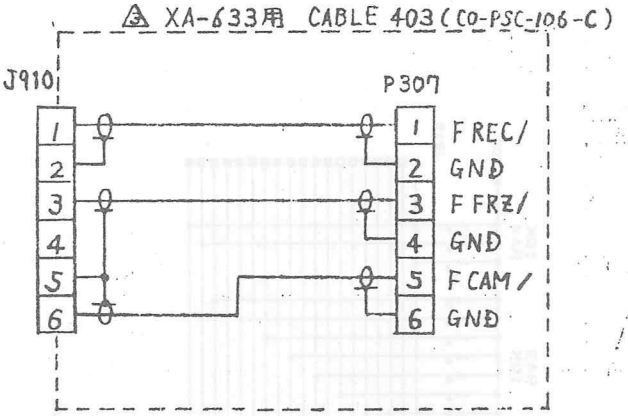


⚠ NOTE

| 枝番 | 機種 | |
|---|---|---|
| なし | SSD-620 | |
| -1 | SSD-870 | 別図面 MC401250 |
| -2 | SSD-650CL | |
| -3 | XA-633 | 直付けケーブル [ ] 内 |
| | | |

REVISIONS変更

⚠ コネクタ廃止 ケーブル直付けに Mw-P6805 #1~ (※7M12278~ '87.10.20.)

⚠ "-2"の指示追加 1988.06.21.

⚠ '88.08.18 NOTE, [ ] 追記 -3, XA-633 順追加 山下

| Aloka | TITLE名称 FOOT SWITCH | MODEL形名 EP-2700 ⚠ -3 -2 | 1/1 |
|---|---|---|---|

| 3RD ANGLE PROJECTION 第3角法 | DRAWN製図 | DESIGNED設計 | CHECKED検図 | APPD承認 | DRAWING NO.図番 |
|---|---|---|---|---|---|
| SCALE 尺度 | 渡辺 | 62.4.28 正 | 62.4.28 下 | 62.8.27 | 7-93 MC401133 |
| UNITS 単位 mm | 62-4-28 | | | | '88.7.13 |

L-015・B-10-82-A4

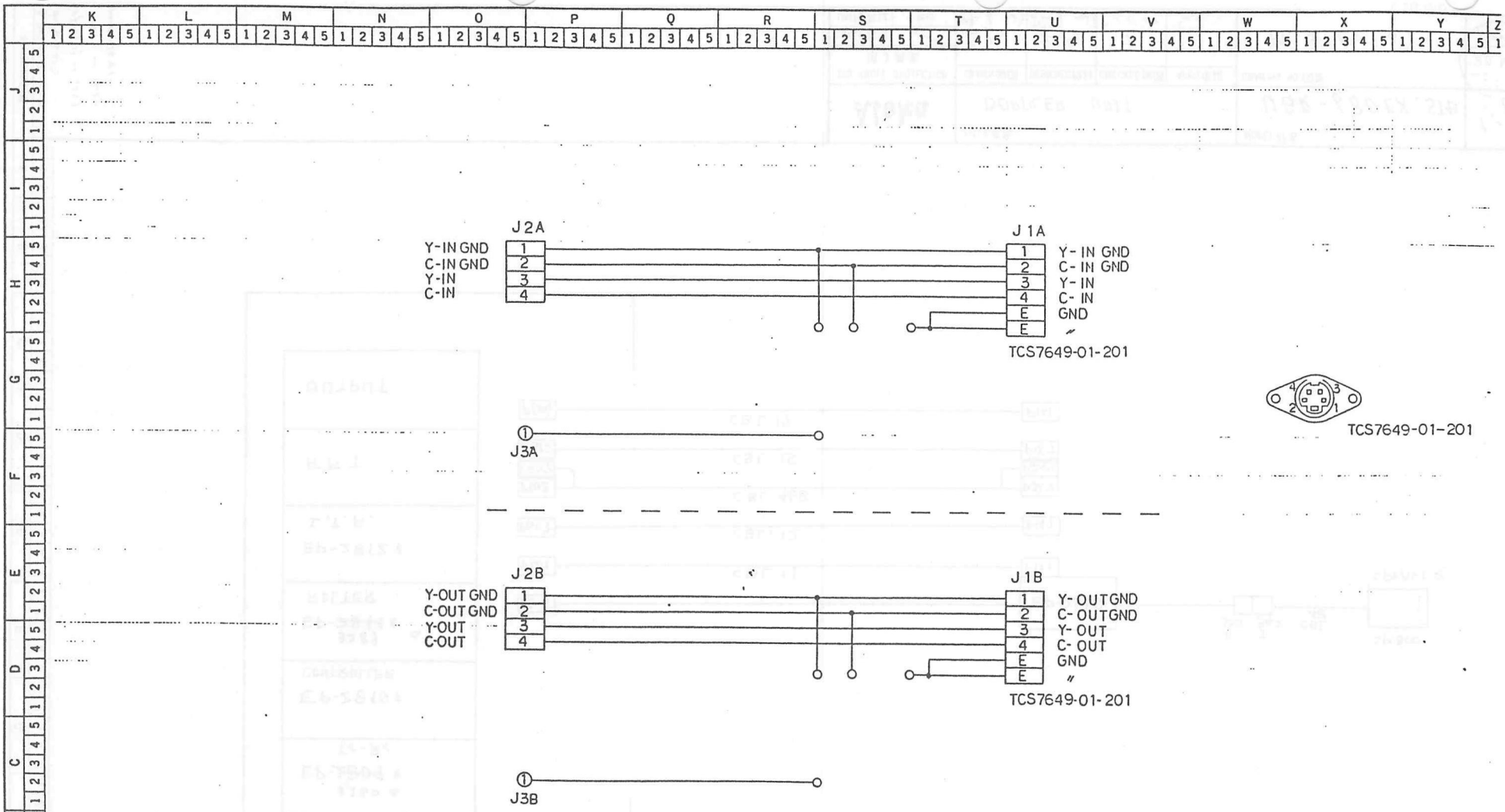


| | | | | | | | |
|---|---|---|---|---|---|---|---|
| REVISIONS変更 | Aloka | TITLE名称 S(Y-C) CONNECTOR | | | | MODEL形名 EP-3179 -1 -2 -3 | 1/1 |
| | 3RD ANGLE PROJECTION 第3角法 | DRAWN製図 | DESIGNED設計 | CHECKED検図 | APPD承認 | DRAWING NO.図番 MC317241 | |
| | SCALE尺度 | | | | | | |
| | UNITS単位 mm | | | | | | |

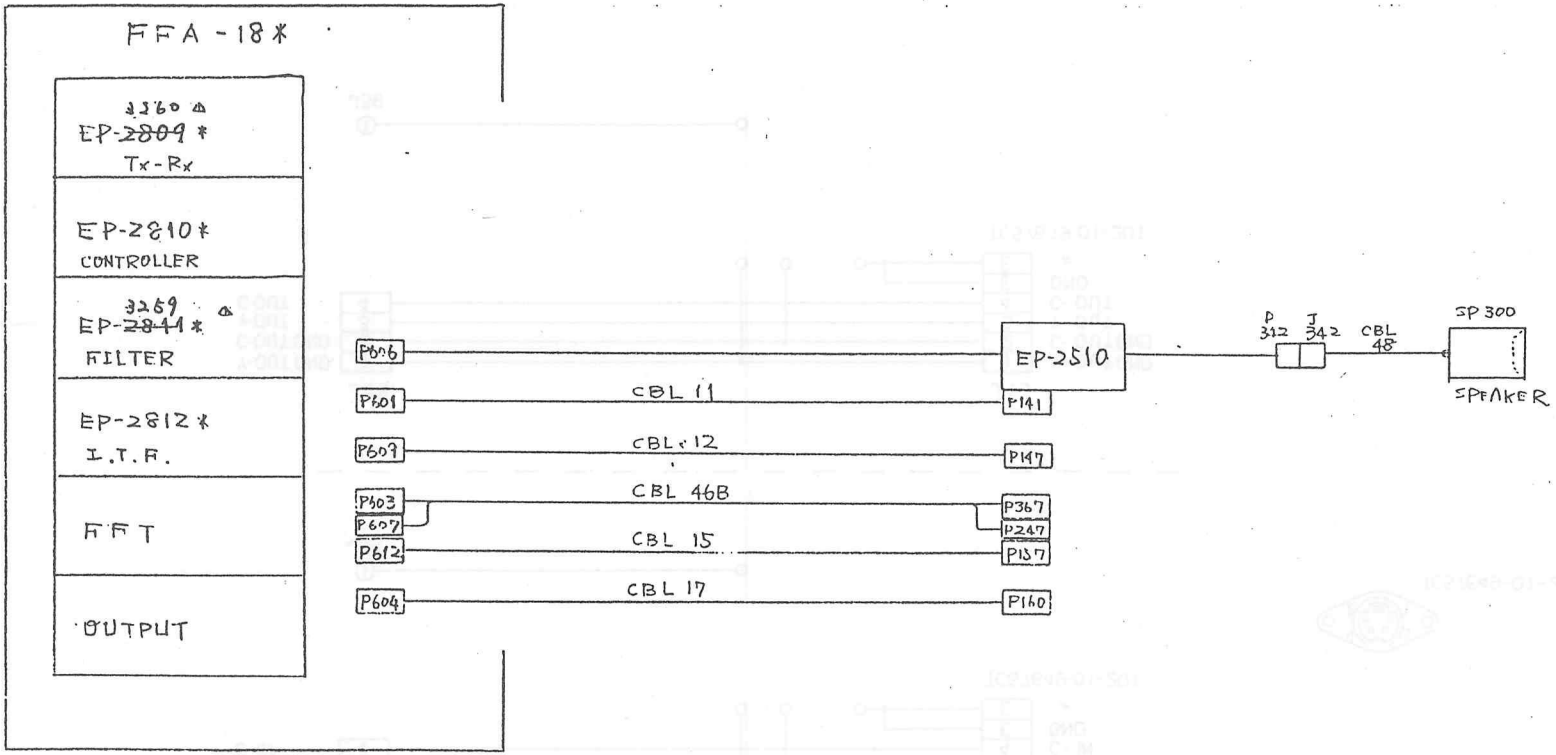


| | | | | | | |
|---|---|---|---|---|---|---|
| Aloka | TITLE 名称: DOPPLER UNIT | | | | MODEL 形名: UGR-680EX, STD | 1/1 |
| 3RD ANGLE PROJECTION 第3角法 | DRAWN 製図 | DESIGNED 設計 | CHECKED 検図 | APPD 承認 | DRAWING NO. 図番: MC316278 | '90. 10. アロ |
| SCALE 尺度 / UNITS 単位 mm | 上屋 | 上屋 | | | | |

REVISIONS 変更

L 013 10-82

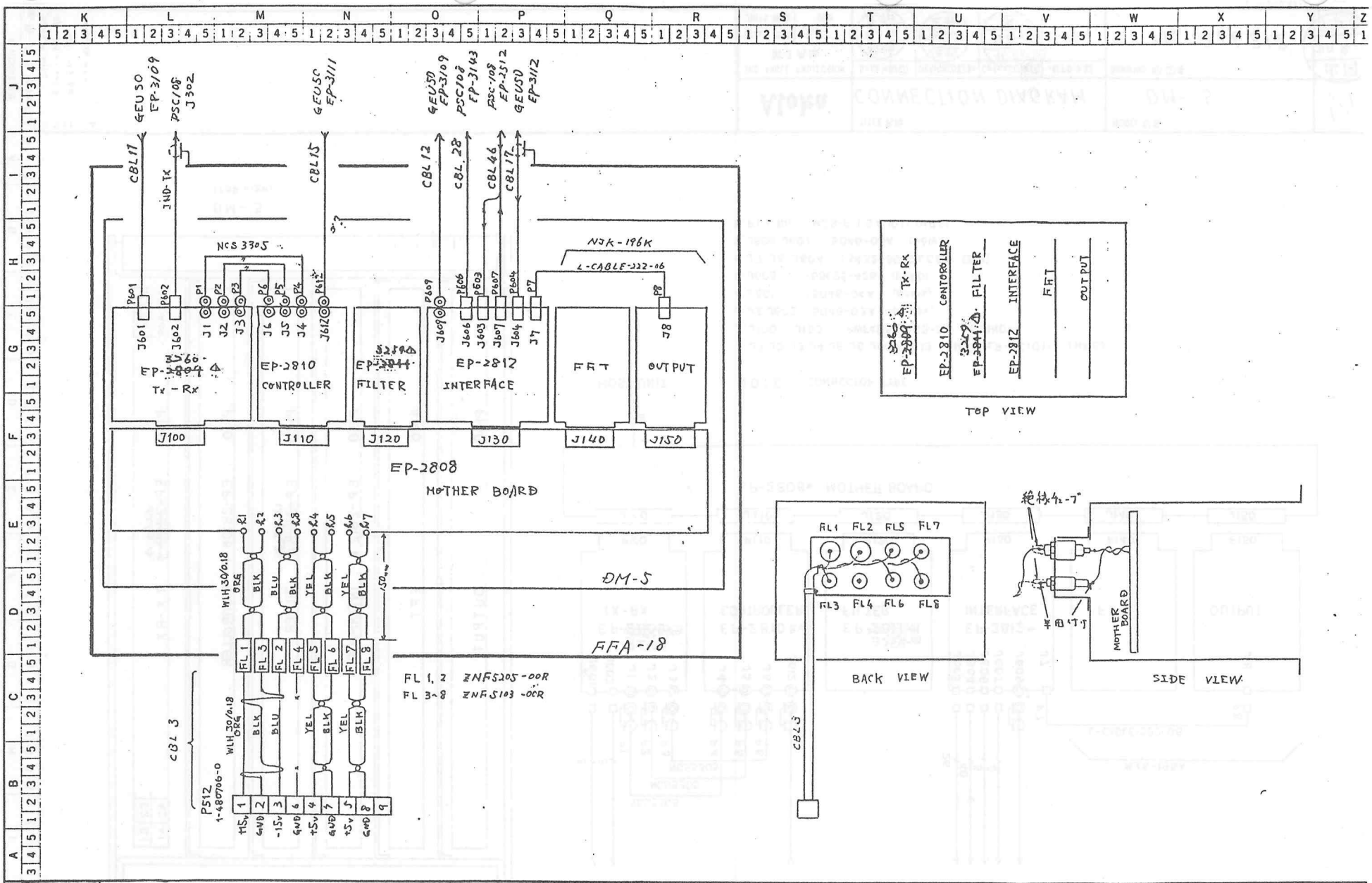


| | | | | | |
|---|---|---|---|---|---|
| REVISIONS変更 | Aloka | TITLE名称 DOPPLER UNIT | | MODEL形名 FFA-18.B. | 1/1 |
| | 3RD ANGLE PROJECTION 第3角法 | DRAWN製図 | DESIGNED設計 | CHECKED検図 | APPD承認 | DRAWING NO.図番 MC 31-4773 | |
| | SCALE尺度 | | | | | | |
| | UNITS単位 mm | | | | | | |

L 013 10-82 A3

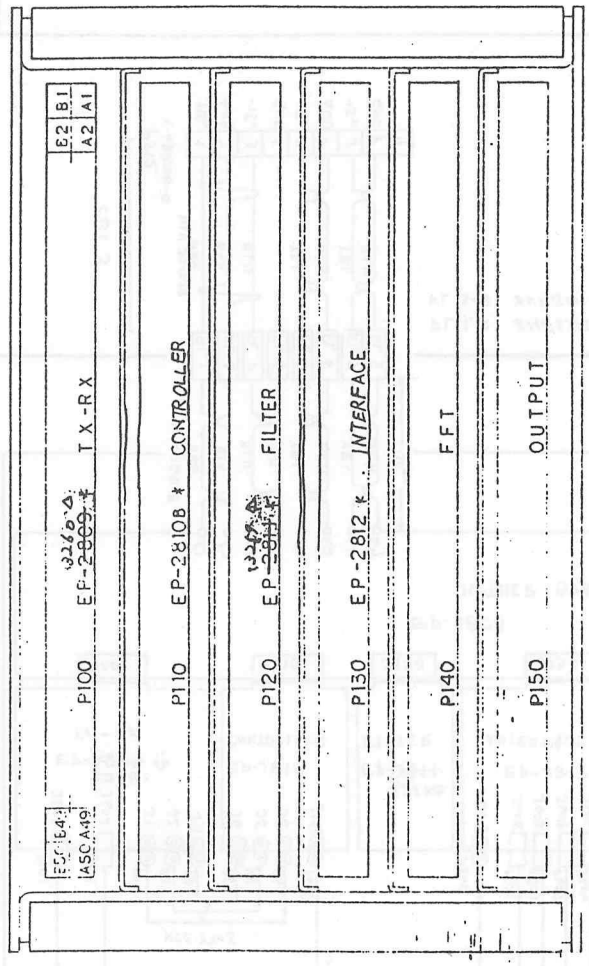


DM-5
(Top view)

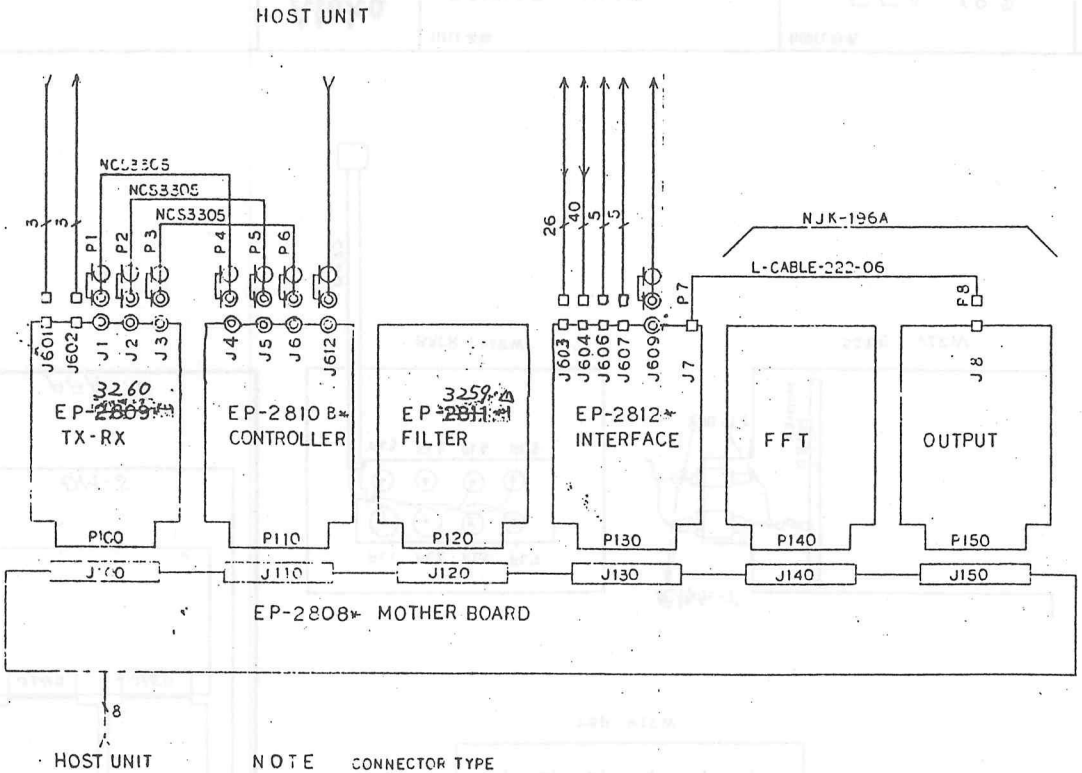


NOTE CONNECTOR TYPE

1. J1, J2, J3, J4, J5, J6, J609, J612 : MSS-LR-PC(01) (HRS)
2. J100 ~ J150 : PWF4D5C-1S2-09 (BURNDY)
3. J3, J602 : 5046-03A (molex)
4. J601 : 5046-04A (molex)
5. J603 : 65625-426 (EERG)
6. J7, J8, J604 : 3432-5002LCSC (3M)
7. J606, J607 : 5046-05A (molex)
8. P1 ~ P6 : MSS-P-1.5A(01) (HRS)

REVISIONS 変更

| | | | | | |
|---|---|---|---|---|---|
| Aloka | TITLE 名称 CONNECTION DIAGRAM | | | MODEL 形名 DM-5 | 1/1 |
| 3RD ANGLE PROJECTION 第3角法 | DRAWN 製図 佐藤 '69.6.28 正和 | DESIGNED 設計 佐藤 '69.6.28 正和 | CHECKED 検図 '69.6.28 正 | APPD 承認 | DRAWING NO 図番 MC 316212 |
| SCALE 尺度 | | | | | 出図 '90.10. アロカ |
| UNITS 単位 mm | | | | | |

L 013 10 82 A

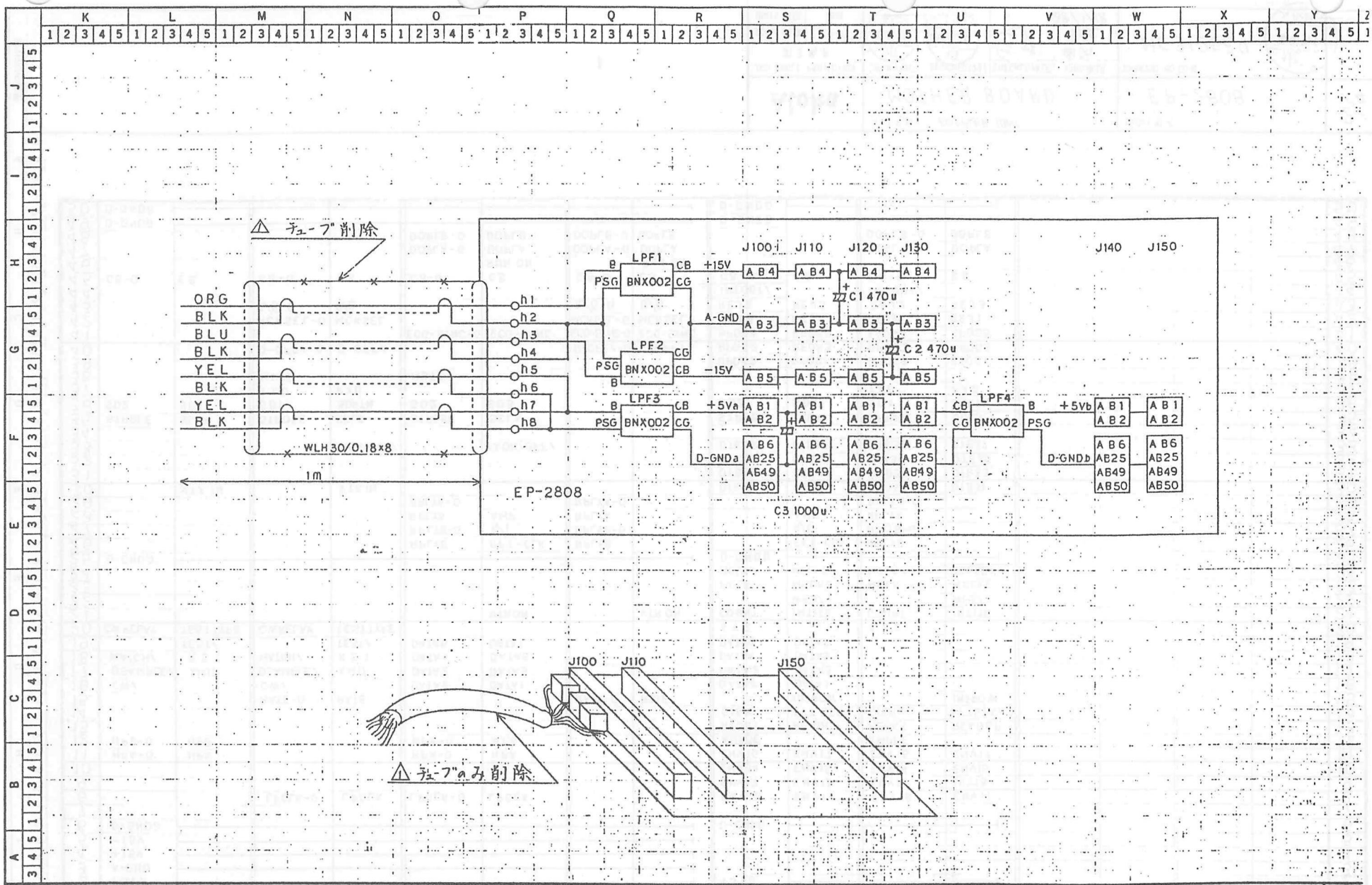


REVISIONS変更

| | |
|---|---|
| 1 | '88.12.6 土屋 MW-80708～ S/N 81M8820～ 箱 D3-M8477 配線ケーブルビニール チューブ削除 |

| | | | | | |
|---|---|---|---|---|---|
| Aloka | TITLE名称 DOPPLER UNIT MOTHER BOARD | | | MODEL形名 EP-2808 | 1/4 |
| 3RD ANGLE PROJECTION 第3角法 | DRAWN製図 | DESIGNED設計 | CHECKED検図 | APPD承認 | DRAWING NO.図番 MC312588 |
| SCALE 尺度 | '88.3.14 | '88.3.14 | | | '89.7.14 |
| UNITS 単位 mm | | | | | |

L-013-10-02-A3

| Pin NO. | TX & RX EP-~~2809~~-3260 J100 A | TX & RX EP-~~2809~~-3260 J100 B | CONTROLLER EP-2810 J110 A | CONTROLLER EP-2810 J110 B | FILTER EP-~~2811~~3259 J120 A | FILTER EP-~~2811~~3259 J120 B | INTERFACE EP-2812 J130 A | INTERFACE EP-2812 J130 B | FFT J140 A | FFT J140 B | OUTPUT J150 A | OUTPUT J150 B | Pin NO. |
|---|---|---|---|---|---|---|---|---|---|---|---|---|---|
| 1 | +5Va | | | | | | | | +5Vb | | | | 1 |
| 2 | +5Va | | | | | | | | +5Vb | | | | 2 |
| 3 | A-GND | | | | | | | | | | | | 3 |
| 4 | +15V | | | | | | | | | | | | 4 |
| 5 | −15V | | | | | | | | | | | | 5 |
| 6 | D-GNDa | | | | | | | | D-GNDb | | | | 6 |
| 7 | | | | | | | | | | | | | 7 |
| 8 | | | LPCLK-G | LPCLK | LPCLK-G | LPCLK | | | ENV1Ø | ENV11 | ENV1Ø | ENV11 | 8 |
| 9 | | | | | | | | | ENV12 | ENV13 | ENV12 | ENV13 | 9 |
| 10 | | | | | | | | | ENV14 | ENV15 | ENV14 | ENV15 | 10 |
| 11 | HPA-G | HPA | | | HPA-G | HPA | | | ENV16 | ENV17 | ENV16 | ENV17 | 11 |
| 12 | HPB-G | HPB | | | HPB-G | HPB | | | AMPOE | | AMPOE | | 12 |
| 13 | | | | | | | | | RESET | READCP | RESET | READCP | 13 |
| 14 | | | | | | | | | SIEN | FFTSTA/ | SIEN | FFTSTA/ | 14 |
| 15 | | | RATE-G | RATE | | | RATE-G | RATE | | INTPOW | | INTPOW | 15 |
| 16 | CW/ | | CW/ | | DATAØ | DATA1 | | | DATAØ | DATA1 | | | 16 |
| 17 | DSAMPLE/ | XMIT | DSAMPLE/ | XMIT | DATA2 | DATA3 | | | DATA2 | DATA3 | | | 17 |
| 18 | MATCH/ | RST | MATCH/ | RST | DATA4 | DATA5 | | | DATA4 | DATA5 | | | 18 |
| 19 | | TEST/ | | TEST/ | DATA6 | DATA7 | | | DATA6 | DATA7 | | | 19 |
| 20 | CWRELAY | TESTTYPE | CWRELAY | TESTTYPE | | | | | XYZ | | XYZ | | 20 |
| 21 | | | | | | VTRON | | VTR ON | COUNT | INTITE | COUNT | INTITE | 21 |
| 22 | | | | | | | | | | WE3/ | | WE3/ | 22 |
| 23 | | | | | | | | | MCLK | MCLKE | MCLK | MCLKE | 23 |
| 24 | | | | | | | | | MCLK/ | MCLKE/ | MCLK/ | MCLKE/ | 24 |
| 25 | D-GNDa | | | | | | | | D-GNDb | | | | 25 |
| 26 | | | | | RPLYB | FFT-CLK | RPLYB | | | FFT-CLK | RPLYB | | 26 |
| 27 | | | | | RPLYB-G | R/I | RPLYB-G | | | R/I | RPLYB-G | | 27 |
| 28 | | | | | RPLYA | AMP | RPLYA | | | AMP | RPLYA | | 28 |
| 29 | | | | | RPLYA-G | | RPLYA-G | | | | RPLYA-G | | 29 |
| 30 | | VTX IN | | VTX IN | | | | | DTB30 | DTB31 | DTB30 | DTB31 | 30 |
| 31 | | | | | | | | | DTB32 | DTB33 | DTB32 | DTB33 | 31 |
| 32 | | | | | | | | | DTB34 | DTB35 | DTB34 | DTB35 | 32 |
| 33 | | | | TXON-OFF/ | | TXON-OFF/ | | | DTB36 | DTB37 | DTB36 | DTB37 | 33 |
| 34 | | | | | | | | | | | | | 34 |
| 35 | STROBE | SCLK | STROBE | SCLK | STROBE | SCLK | | | STROBE | SCLK | STROBE | SCLK | 35 |
| 36 | SD2 | SD1 | SD1 | SDRTN | SD2 | SD3 | | | SD3 | SD4 | SD4 | SDRTN | 36 |
| 37 | | | TXD | RXD | | | | | | | TXD | RXD | 37 |
| 38 | | | MUTE | | MUTE | | | | | | | | 38 |
| 39 | | | | | | | | | BPOSØ | BPOS1 | BPOSØ | BPOS1 | 39 |
| 40 | | | D-OFF/-G | D-OFF/ | | | D-OFF/-G | D-OFF/ | BPOS2 | BPOS3 | BPOS2 | BPOS3 | 40 |
| 41 | | | | | ECG-SYNC-G | ECG-SYNC | ECG-SYNC-G | ECG-SYNC | BPOS4 | BPOS5 | BPOS4 | BPOS5 | 41 |
| 42 | | | MCKSEL-G | MCKSEL | | | MCKSEL-G | MCKSEL | REJØ | REJ1 | REJØ | REJ1 | 42 |
| 43 | | | B/D-G | B/D | | | B/D-G | B/D | REJ2 | REJ3 | REJ2 | REJ3 | 43 |
| 44 | | | | | | | | | INTOUT/ | | INTOUT/ | | 44 |
| 45 | C8-G | C8 | C8-G | C8 | C8-G | C8 | C8-G | C8 | C8-G | C8 | C8-G | C8 | 45 |
| 46 | | | | | | RUN ON | | RUN ON | | | | | 46 |
| 47 | | | | | DOPLA-G | DOPLA | DOPLA-G | DOPLA | | | DOPLA-G | DOPLA | 47 |
| 48 | | | | | DOPLB-G | DOPLB | DOPLB-G | DOPLB | | | DOPLB-G | DOPLB | 48 |
| 49 | D-GNDa | | | | | | | | D-GNDb | | | | 49 |
| 50 | D-GNDa | | | | | | | | D-GNDb | | | | 50 |

| | | | | | |
|---|---|---|---|---|---|
| REVISIONS 改訂 | Aloka | TITLE 名称 DOPPLER UNIT MOTHER BOARD | MODEL 形名 EP-2808 | 2/4 | |
| | 3RD ANGLE PROJECTION 第3角法 | DRAWN 製図 | DESIGNED 設計 | CHECKED 検図 | APPD 承認 |
| | SCALE 尺度 / UNITS 単位 mm | 93.3.14 | 93.3.14 | 三井 | 南沢 小林 88/3/18 |
| | | DRAWING NO 図番 MC312529 | | | |

7-99

| PC-UNIT NAME | TX & RX | Cont-roller | Filter | Inter face | FFT | Out-Put |
|---|---|---|---|---|---|---|
| EP- | 3260 ~~2809~~ | 2810 | 3259 ~~2811~~ | 2812 | — | — |
| SIGNAL \ J | 100 | 110 | 120 | 130 | 140 | 150 |
| AMP | | | B28 | | B28 | |
| AMPOE | | | | | A12 | A12 |
| | | | | | | |
| | | | | | | |
| BPOS Ø | | | | | A39 | A39 |
| 〃 1 | | | | | B39 | B39 |
| 〃 2 | | | | | A40 | A40 |
| 〃 3 | | | | | B40 | B40 |
| 〃 4 | | | | | A41 | A41 |
| 〃 5 | | | | | B41 | B41 |
| | | | | | | |
| B/D | | B43 | | B43 | | |
| B/D-G | | A43 | | A43 | | |
| | | | | | | |
| | | | | | | |
| C8 | B45 | B45 | B45 | B45 | B45 | B45 |
| C8-G | A45 | A45 | A45 | A45 | A45 | A45 |
| | | | | | | |
| COUNT | | | | | A21 | A21 |
| CW RELAY | A20 | A20 | | | | |
| CW/ | A16 | A16 | | | | |
| | | | | | | |
| | | | | | | |
| DATA Ø | | | A16 | | A16 | |
| 〃 1 | | | B16 | | B16 | |
| 〃 2 | | | A17 | | A17 | |
| 〃 3 | | | B17 | | B17 | |
| 〃 4 | | | A18 | | A18 | |
| 〃 5 | | | B18 | | B18 | |
| 〃 6 | | | A19 | | A19 | |
| 〃 7 | | | B19 | | B19 | |
| | | | | | | |
| DOPLA | | | B47 | B47 | | B47 |
| DOPLA-G | | | A47 | A47 | | A47 |
| | | | | | | |
| DOPLB | | | B48 | B48 | | B48 |
| DOPLB-G | | | A48 | A48 | | A48 |
| | | | | | | |
| DSAMPLE/ | A17 | A17 | | | | |
| | | | | | | |
| D-OFF | | B40 | | B40 | | |
| D-OFF-G | | A40 | | A40 | | |

| PC-UNIT NAME | TX & RX | Cont-roller | Filter | Inter face | FFT | Out-Put |
|---|---|---|---|---|---|---|
| EP- | 3260 ~~2809~~ | 2810 | 3259 ~~2811~~ | 2812 | — | — |
| SIGNAL \ J | 100 | 110 | 120 | 130 | 140 | 150 |
| DTB-30 | | | | | A30 | A30 |
| 〃 31 | | | | | B30 | B30 |
| 〃 32 | | | | | A31 | A31 |
| 〃 33 | | | | | B31 | B31 |
| 〃 34 | | | | | A32 | A32 |
| 〃 35 | | | | | B32 | B32 |
| 〃 36 | | | | | A33 | A33 |
| 〃 37 | | | | | B33 | B33 |
| | | | | | | |
| | | | | | | |
| ECG-SYNC | | | B41 | B41 | | |
| ECG-SYNC-G | | | A41 | A41 | | |
| | | | | | | |
| ENV 1Ø | | | | | A8 | A8 |
| 〃 11 | | | | | B8 | B8 |
| 〃 12 | | | | | A9 | A9 |
| 〃 13 | | | | | B9 | B9 |
| 〃 14 | | | | | A10 | A10 |
| 〃 15 | | | | | B10 | B10 |
| 〃 16 | | | | | A11 | A11 |
| 〃 17 | | | | | B11 | B11 |
| | | | | | | |
| FFT-CLK | | | B26 | | B26 | |
| | | | | | | |
| FFA STA/ | | | | | B14 | B14 |
| | | | | | | |
| | | | | | | |
| HPA | B11 | | B11 | | | |
| HPA-G | A11 | | A11 | | | |
| | | | | | | |
| HPB | B12 | | B12 | | | |
| HPB-G | A12 | | A12 | | | |
| | | | | | | |
| | | | | | | |
| INTITE | | | | | B21 | B21 |
| | | | | | | |
| INTPOW | | | | | B15 | B15 |
| | | | | | | |
| INT OUT/ | | | | | A44 | A44 |
| | | | | | | |
| | | | | | | |

7-100

REVISIONS 変更

Aloka

3RD ANGLE PROJECTION 第3角法

SCALE 尺度:

UNITS 単位: mm

TITLE 名称 DOPPLER UNIT

MOTHER BOARD

MODEL 形名 EP-2808

3/4

DRAWN 製図 DESIGNED 設計 CHECKED 検図 承認

'88.3.14 '88.3.14 '88/3/18

DRAWING NO 図番 MC312540

出図 '89.7.4

L 013 10 82

| PC-UNIT NAME | TX &RX | Controller | Filter | Interface | FFT | Output |
|---|---|---|---|---|---|---|
| EP- | 3260 ~~2809~~ | 2810 | 3259 ~~2811~~ | 2812 | — | — |
| SIGNAL | 100 | 110 | 120 | 130 | 140 | 150 |
| LPCLK | | B8 | B8 | | | |
| LPCLK-G | | A8 | A8 | | | |
| MCLK | | | | | A23 | A23 |
| MCLKE | | | | | B23 | B23 |
| MCLK/ | | | | | A24 | A24 |
| MCLKE/ | | | | | B24 | B24 |
| MUTE | | A38 | A38 | | | |
| MATCH/ | A18 | A18 | | | | |
| MCKSEL | | B42 | | B42 | | |
| MCKSEL-G | | A42 | | A42 | | |
| RATE | | B15 | | B15 | | |
| RATE-G | | A15 | | A15 | | |
| READCP | | | | | B13 | B13 |
| R/T | | | B27 | | B27 | |
| REJ Ø | | | | | A42 | A42 |
| 〃 1 | | | | | B42 | B42 |
| 〃 2 | | | | | A43 | A43 |
| 〃 3 | | | | | B43 | B43 |
| RESET | | | | | A13 | A13 |
| RPLYA | | | A28 | A28 | | A28 |
| RPLYA-G | | | A29 | A29 | | A29 |
| RPLYB | | | A26 | A26 | | A26 |
| RPLYB-G | | | A27 | A27 | | A27 |
| RST | B18 | B18 | | | | |
| RUN ON | | | B46 | B46 | | |
| RXD | | B37 | | | | B37 |

| PC-UNIT NAME | TX &RX | Controller | Filter | Interface | FFT | Output |
|---|---|---|---|---|---|---|
| EP- | 3260 ~~2809~~ | 2810 | 3259 ~~2811~~ | 2812 | — | — |
| SIGNAL J | 100 | 110 | 120 | 130 | 140 | 150 |
| SCLK | B35 | B35 | B35 | | B35 | B35 |
| SD1 | B36 | A36 | | | | |
| SD2 | A36 | | A36 | | | |
| SD3 | | | B36 | | A36 | |
| SD4 | | | | | B36 | A36 |
| SDRTN | | B36 | | | | B36 |
| STROBE | A35 | A35 | A35 | | A35 | A35 |
| SIEN | | | | | A14 | A14 |
| TEST/ | B19 | B19 | | | | |
| TEST TYPE | B20 | B20 | | | | |
| TXD | | A37 | | | | A37 |
| TXON-OFF/ | | B33 | B33 | | | |
| VTR ON | | | B21 | B21 | | |
| VTX IN | B30 | B30 | | | | |
| WE3/ | | | | | B22 | B22 |
| XMIT | B17 | B17 | | | | |
| XYZ | | | | | A20 | A20 |

REVISIONS 変更

Aloka

TITLE 名称 DOPPLER UNIT
MOTHER BOARD

MODEL 形名 EP-2808

4/4

3RD ANGLE PROJECTION 第3角法

SCALE 尺度

UNITS 単位 mm

DRAWN 製図 布 '88.3.14 施

DESIGNED 設計 布 '88.3.14 施

CHECKED 検図 三井

APPROVED 承認 開沂 小林 '88/3/18

DRAWING NO 図番 MC312591

'89.3.14

UN4: EP-2922B

T1: M-T-231

UN3: EP-3241B

UN2: EP-3240B

POWER Sw

AC IN

PS00

100V: 8266N

200V: 503-03

35sq-2Q1

GND

J502

TB500

CB1 (½)

LF1

MAS-1220-33

S1 SU10A-1

TB1

J504 (1-480703-0)

F502 1A

TB501

CB1 (½) 6A

J503 (1-480769-0)

ISOLATION TRANSFOMER MAX500VA

J500-L

J500-W

J506

S2 SU10A-1

AC-G10BBFF

P505

J505 (1-480703-0)

MAX90VA

E500 2A

200V系の場合は、トランスユニット PTU-020 を使用する

TB501の結線方法

| 番圧 | 100V | 115V | 120V | 200V | 220V | 230V | 240V |
|---|---|---|---|---|---|---|---|
| ① | 1-7 | 1-6 | 1-5 | 2-7 | 2-5 | 3-6 | 4-5 |
| ② | 2-8 | 3-8 | 4-8 | NO CONNECTION | | | |

120V 8 / 20V 7 / 5V 6 / 0V 5 / 120V 4 / 115V 3 / 100V 2 / 0V 1

F1 F2 F3 F4 F5

D1 S25VB10

D2 S25VB10

D3 S15VB10

C91 10,000μ 50WV

TB30 TB50 TB40 TB10 TB11

J21 J20 J10

P10 (VHR-10N)

UN3のTB5

UN2のTB50

UN2のTB11

LF2 MBW-1205-22

UN1 ES300-5

CN1 (XHP-5)

UN5 SSG010-15

CN2 (XHP-4)

J510-2

J510-3

FA1

E2 2A

TB12 TB2

J8 (B2P-VH)

P8

J30 P50 (VHR-5N)

P1 J1 B5P-VH

C1 C2 C3 C4 C5 C6 C7 C8 C9 C10

D1 D2 D3 D4 D5 D6 D7 D8 D9

R1 R2 R3 R4 R5 R6 R7 R8 R9

J514 J515 J516 J517 J518 J519

+23V 0.8A

0

+5V 9.0A

0

-5.1V 5.8A

+6V 0.5A (MAX 1.2A)

0

6.1A +15V

0

1.0A -15VA

0

-15VB 0.6A

0

CN2-3

CN2-4

J30 P40 (1-480703-0)

P2 J2 95.0430-1

HVA 0

HVB 0

J30 P50

CA2 L-CABLE-203-B

P3

P7 J7 (VHR-3N) B3P-VH

J518

DATA 0 / 1 / 2 / 3

HVB ON/OFF

TRIG OFF

GND

RV 1 / 2 / 3

RV1 5kΩ

TB3 TB4 TB5 TB6

C11 2,200μ 25WV

C12 0.22μ 50WV

+S / + / − / -S

29A +5.1V

0

J513 J511 J509 J512 J520

E501 2A

J500 (L D W)

AC 100V 1.1A

AC-G10BBFF

A

TB503-8

TB503-5

REVISIONS 変更

| | | |
|---|---|---|
| △ | 91.2.24 | 高橋 PW-237~ 回路変更 PS-1165 |
| △ | 91.2.24 | 高橋 PW-150~ PC基板 PS-1165 |
| △ | 91.3.31 | 22.27 ±5 PW-122 5A OF2200W J503の部品変更 PS-591 H型 |
| △ | 91.6.4 | 高橋 PW-237 1P3200W~ 回路変更 PS-1236 |
| △ | 91.7.3 | 高橋 PW-245 1P4500W~ PS-1239 1P4535 |
| △ | 92.8.13 | 高橋 PWP-001 1P4536~1P4560 「PSU-S680B」型 PS-1362 |
| △ | 92.11.24 | 高橋 PWP-001 1P4536~1P4560 PS-642 |

7-102

Aloka

3RD ANGLE PROJECTION 第3角法

SCALE 尺度

UNITS 単位 mm

TITLE名称 Power Supply Unit

| DRAWN 製図 | DESIGNED 設計 | CHECKED 検図 | APPD 承認 |
|---|---|---|---|
| 八木橋 90.3.30 | | | 前田 Yuda 90.4.4 |

MODEL 形名 PSU-S680B △

DRAWING NO. 図番 MC202192

1/1

L-811-10-82-A2

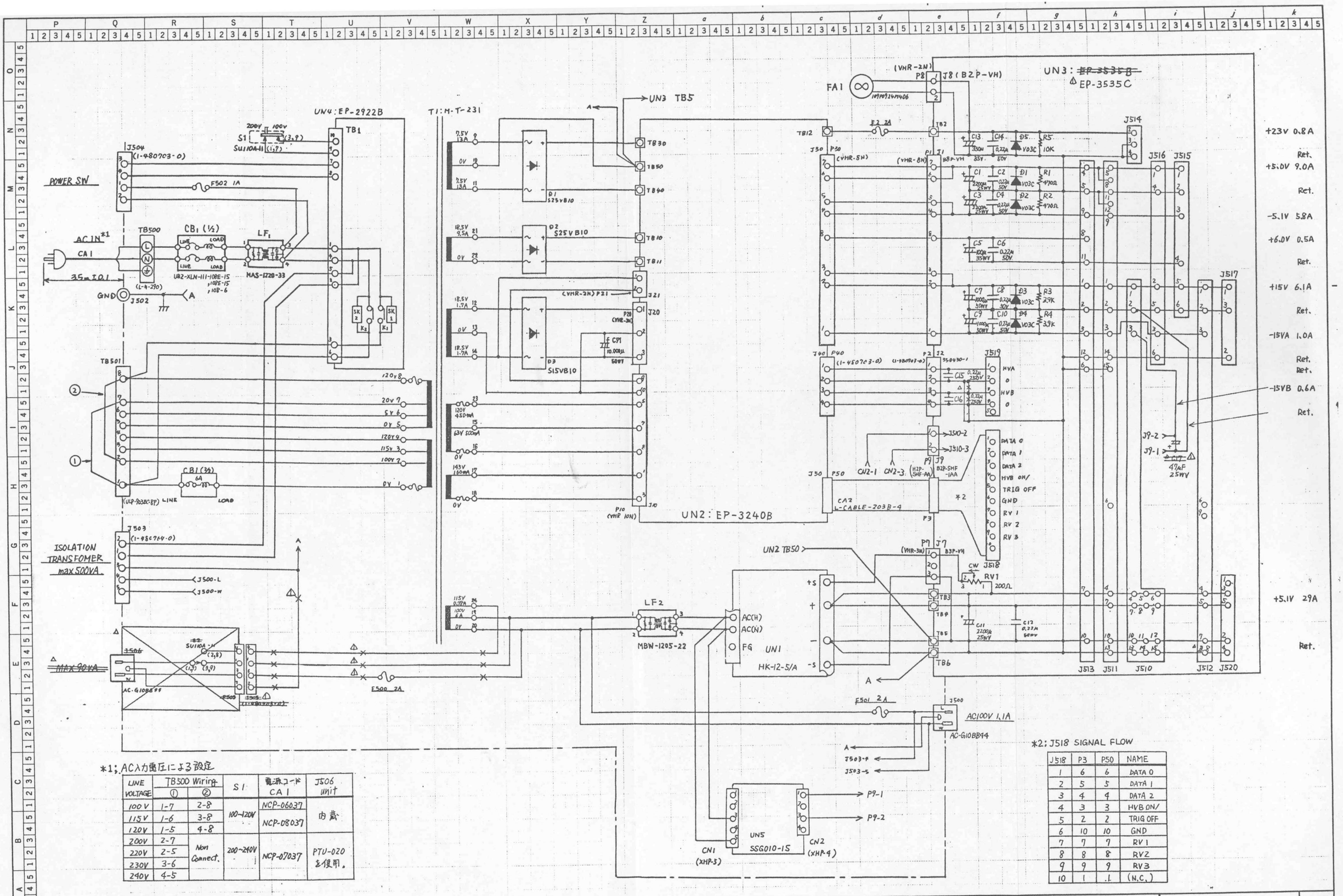


*1; AC入力電圧による設定

| LINE VOLTAGE | TB500 Wiring ① | TB500 Wiring ② | S1 | 電源コード CA1 | J506 unit |
|---|---|---|---|---|---|
| 100V | 1-7 | 2-8 | 100~120V | NCP-06037 | 内蔵 |
| 115V | 1-6 | 3-8 | | NCP-08037 | |
| 120V | 1-5 | 4-8 | | | |
| 200V | 2-7 | Non Connect. | 200~240V | NCP-07037 | PTU-020 を使用。 |
| 220V | 2-5 | | | | |
| 230V | 3-6 | | | | |
| 240V | 4-5 | | | | |

*2; J518 SIGNAL FLOW

| J518 | P3 | P50 | NAME |
|---|---|---|---|
| 1 | 6 | 6 | DATA 0 |
| 2 | 5 | 5 | DATA 1 |
| 3 | 4 | 4 | DATA 2 |
| 4 | 3 | 3 | HVB ON/ |
| 5 | 2 | 2 | TRIG OFF |
| 6 | 10 | 10 | GND |
| 7 | 7 | 7 | RV 1 |
| 8 | 8 | 8 | RV2 |
| 9 | 9 | 9 | RV3 |
| 10 | 1 | 1 | (N.C.) |

REVISIONS変更
△92,11,25 高橋 PW-367 (2P67001)~ (注) PS-647
△93,1,5 高橋 PW-402 (2P02001)~ (PW-391から実施すみ) (注) PS-1405

7-103

| Aloka | TITLE名称 Power Supply Unit | MODEL形名 PSU-S680C | 1/1 |
|---|---|---|---|
| 3RD ANGLE PROJECTION 第3角法 | DRAWN製図 | DESIGNED設計 | CHECKED検図 | APPD承認 | DRAWING NO.図番 MC 325 642 |
| SCALE 尺度 | 閏7G 92.8.24 高橋 | 閏7G 92.8.24 高橋 | 閏7G 92.8.31 松場 | 閏7G 92.8.31 湯田 | |
| UNITS 単位 mm | | | | | |

L-011-10-82-A2

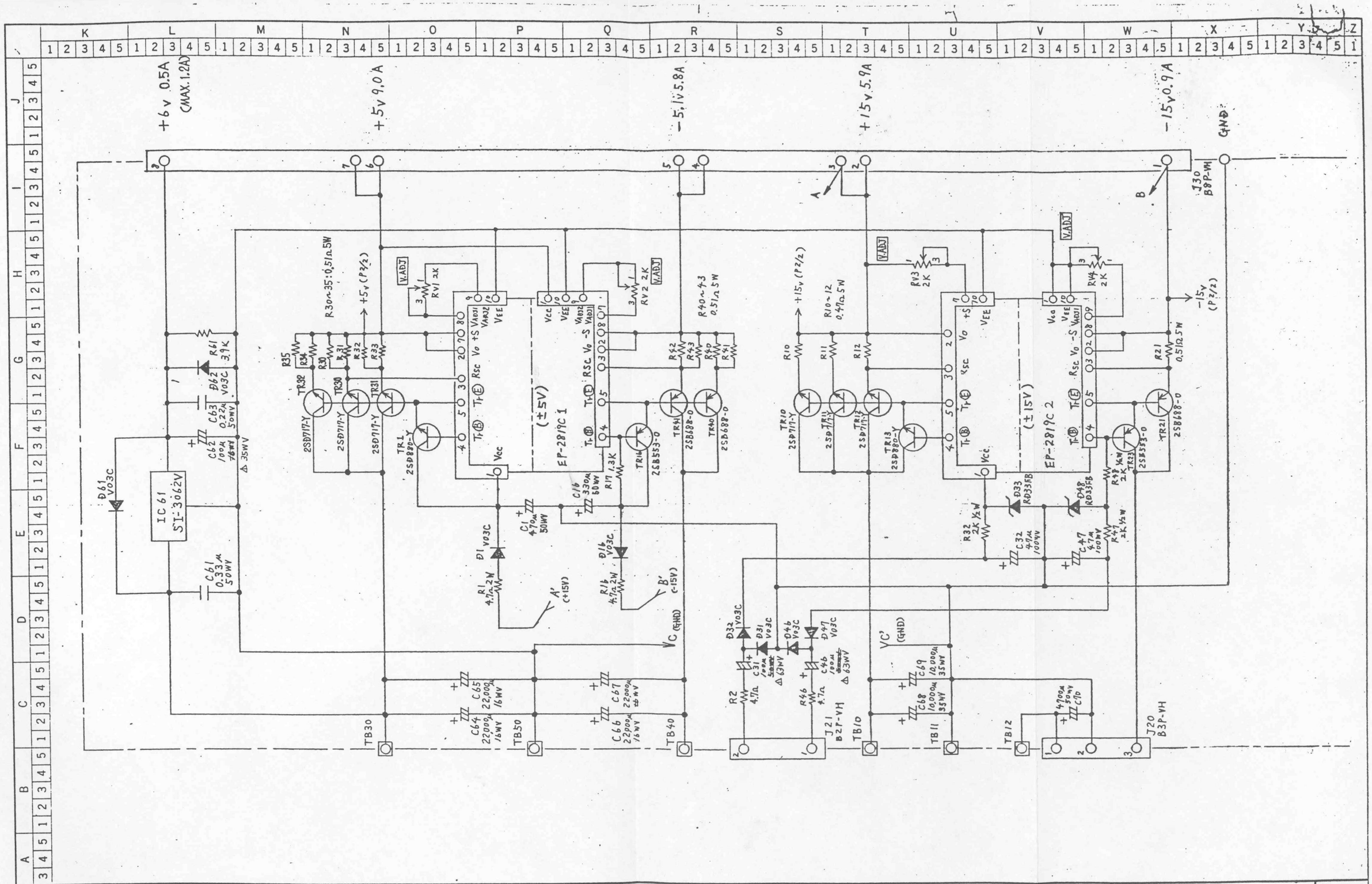


| | | | | | | |
|---|---|---|---|---|---|---|
| REVISIONS変更<br>Δ90.7.24 高橋 PW-150~<br>アトワーク修正1:ボタンの名称<br>㉔ PS-1165<br>Δ91.7.3 高橋<br>PW-245 1P45001~<br>㉕ PS-1239 | 7-104 | Aloka | TITLE名称 UN2<br>Low Voltage Circuit | | | MODEL形名<br>EP-3240 Δ B |
| | | 3RD ANGLE PROJECTION<br>第3角法 | DRAWN製図<br>八木橋 | DESIGNED設計 | CHECKED検図 | APPD承認<br>南7G<br>Yuda |
| | | SCALE尺度 | | | | |
| | | UNITS単位 mm | 90-3.30 | - | - | 90.4.4 |

DRAWING NO.図番 MC-318081

1/2

L-013-10-82-A3

UN4: EP-2922B

T1: M-T-231

UN3: EP-3241B

UN2: EP-3240B

POWER Sw

AC IN

F502 1A

S1 SU110A-1

CB1 (½)

LF1 MAS-1220-33

TB500

P500 8266N 100V系 503-03 200V系

35㎟ 10J

J502 GND

TB501

J504 (1-480703-0)

J503 (1-480769-0)

ISOLATION TRANSFORMER MAX 500VA

J500-L

J500-W

S2 SU140A-1

J506 AC-G1088**

J505 (1-480903-0)

E500 7A

MAX 20 VA

TB1

120V 8

20V 9

5V 6

0V 5

120V 4

115V 3

100V 2

0V 1

F1

F2

F3

F4

F5

TB30

TB50

TB60

TB10

TB11

J21

J20

J10

D1 S25VB10

D2 S25VB10

D3 S15VB10

C71 10,000μ 50WV

J30 P50 (VHR-8N)

P1 J1 B8P-VH

FA1

P8 J8 (B2P-VH)

F2 2A

TB2

J514

J515

J516

J517

J518

J519

C1 C2 C3 C4 C5 C6 C7 C8 C9 C10 C16

D1 D2 D3 D4 D5 D6 D7 D8 VC3C

R1 R2 R3 R4 R5 R6 R7 R8

+23V 0.8A

0

+5V 9.0A

0

-5.1V 5.8A

+6V 0.5A (MAX 1.2A)

0

6.1A +15V

0

1.0A -15V

0

-15VB 0.6A

0

CN2-3

CN2-4

MVA 0 · 1 · 2

HVB ON/OFF

TRIG OFF

GND

RV 1 · 2 · 3

J518

J30 P50

CA2 L-CABLE-203-9

P7 J7 B3P-VH

RV1

TB3 TB4 TB5 TB6

C11 C12

+S +

− -S

A

J513 J511 J510 J512 J520

29A +5.1V

0

LF2 MBW-1205-22

L N AC A B UN1 ES300-5

E501 2A

J505 AC-G1088**

AC 100V 1.1A

A

TB501-2

TB501-3

UN5 SSG010-15

CN1 (XHP-5)

CN2 (XHP-4)

J510-2

J510-3

△UN2のTB50 ~~UN2のTB11~~

200V系の場合は、トランスユニット PTU-020 を使用する

Oselbdim

O se

O sw

O gran diinn

TB501の結線方法

| 電圧 | 100V | 115V | 120V | 200V | 220V | 230V | 240V |
|---|---|---|---|---|---|---|---|
| ① | 1-7 | 1-6 | 1-5 | 2-7 | 2-5 | 3-6 | 4-5 |
| ② | 2-8 | 3-8 | 4-8 | NO CONNECTION | | | |

Drive gran 220V

REVISIONS 変更

△H2.2.24 お南 PW-237~ 結線変更 ㊀ PS-1165

△H2.2.28 お南 PW-150~ 一式目 ㊁ PS-1165

△H2.3.31 22.1T 2.5" PW-122 3/4 OP22NH~ J503の結線変更 ㊂ PS-501 登録

△H3.6.4 お南 PW-237 IP2700~ 出荷時入換え ㊃ PS-1236

△H3.7.3 お南 PW-245 IP4500~ IP4600 ㊄ PS-1239

△H3.8.13 お南 PWP-001 IP8036~IP8501 「PSU-S680B」登 ㊅ PS-1362

△H3.11.24 お南 PWP-001 IP8508~IP8501 ㊆ PS-642

Aloka

3RD ANGLE PROJECTION 第3角法

SCALE 尺度

UNITS 単位 mm

TITLE 名称 Power Supply Unit

MODEL 形名 PSU-S680B △

DRAWING NO. 図番 MC202192

1/1

DRAWN 製図 八木橋 90.3.30

DESIGNED 設計

CHECKED 検図

APPD 承認 前17G Yuda 90.4.4

7-102

L-811-10-82-A2

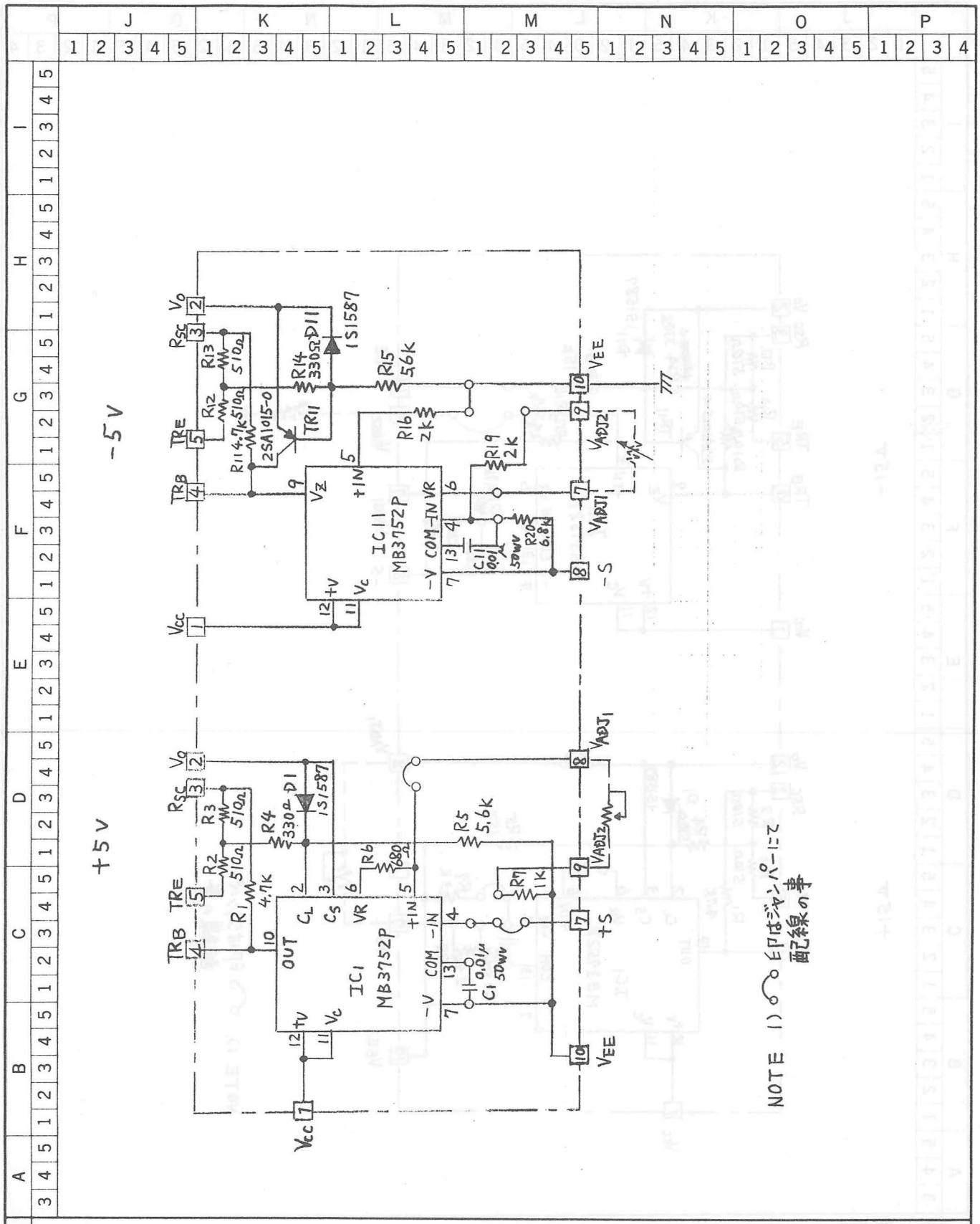


REVISIONS変更

| | | | | | |
|---|---|---|---|---|---|
| Aloka | TITLE名称 ±5V Control Unit. | | | MODEL形名 EP-2819C1 | 1/1 |
| 3RD ANGLE PROJECTION 第3角法 | DRAWN製図 八木橋 | DESIGNED設計 | CHECKED検図 7-106 | APPD承認 | DRAWING NO.図番 MC-401441 |
| SCALE 尺度 | | | | | |
| UNITS 単位 mm | 90-3-30 | | | | |

L-015・B-10-82-A4

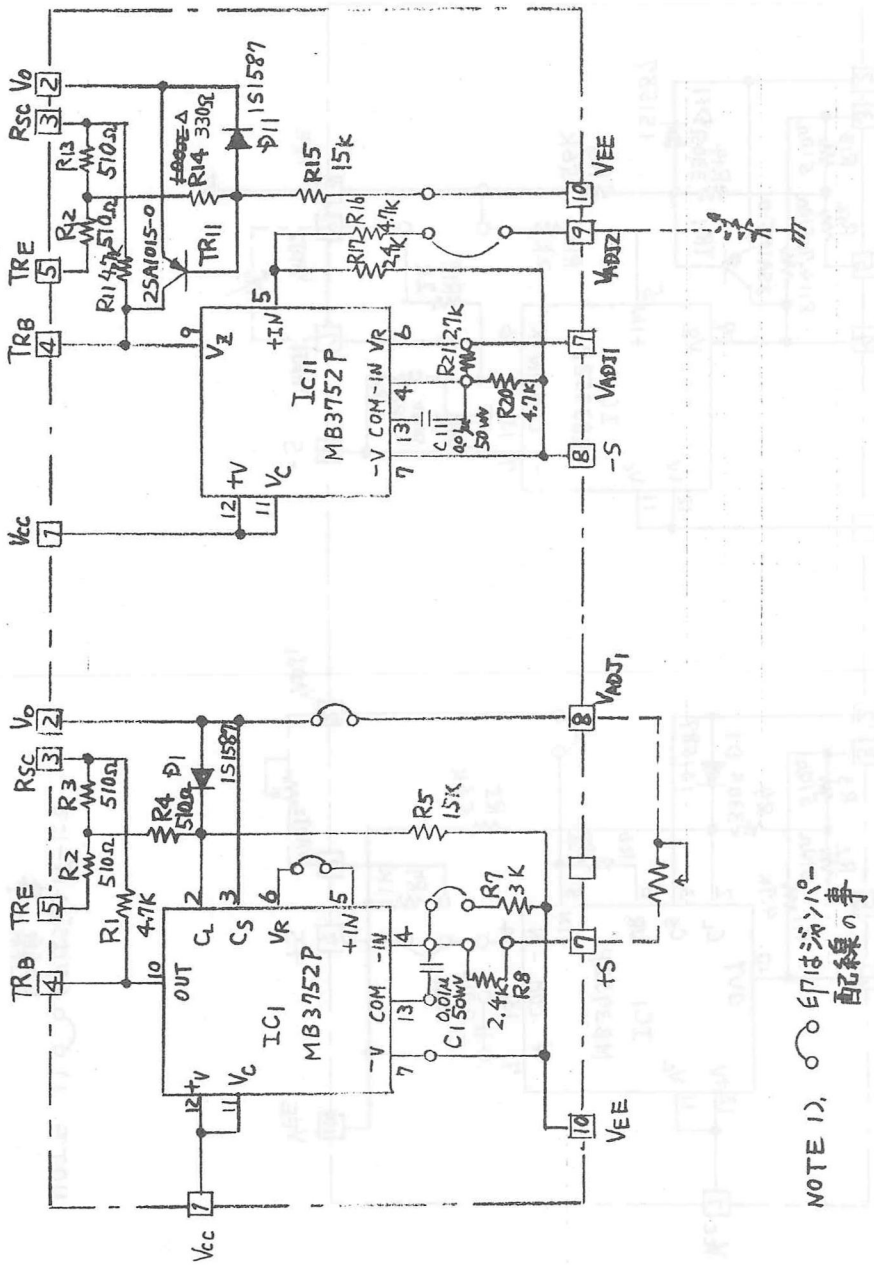


| REVISIONS変更 |
|---|
| Δ90.8.31 改訂 コダ PW-122 ※1～ R14を330Ωに変更 (株)PS-501参照 |

| | | | |
|---|---|---|---|
| Aloka | TITLE名称 ±15V Control Unit | MODEL形名 EP-2819C2 | 1/1 |
| 3RD ANGLE PROJECTION 第3角法 | DRAWN製図 ハヤカワ 90-3-30 | DESIGNED設計 - - | CHECKED検図 7-107 |
| SCALE尺度 / | APPD承認 岡TG 90.4.4 湯田 | DRAWING NO.図番 MC-401442 | |
| UNITS単位 mm | | | |

L-015・B-10-82-A4

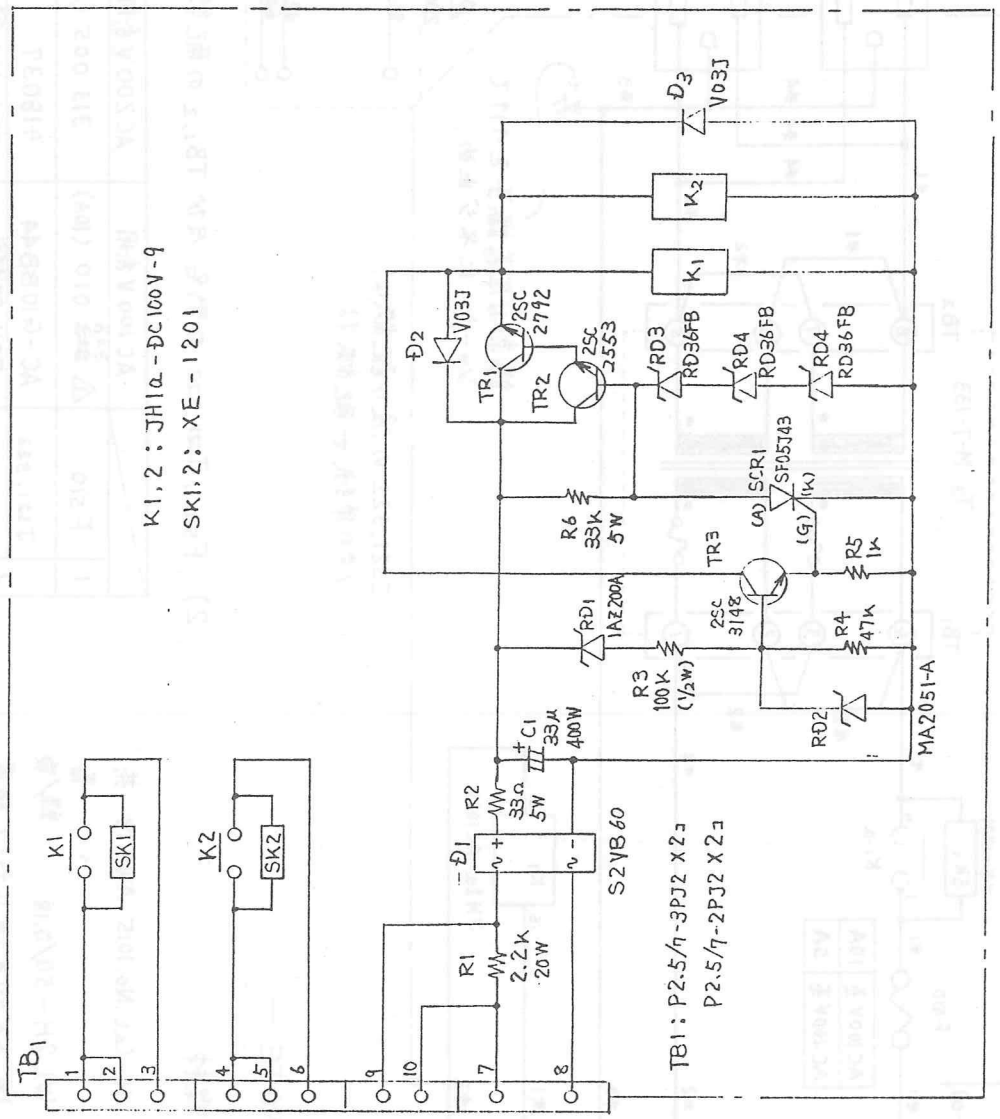


REVISIONS変更

| | | | |
|---|---|---|---|
| Aloka | TITLE名称 入力リレー回路 Input Relay circuit | MODEL形名 EP-2922B | 1/1 |
| 3RD ANGLE PROJECTION 第三角法 | DRAWN製図 | DESIGNED設計 | CHECKED検図 | APPD承認 | DRAWING NO.図番 |
| SCALE尺度 | | | 7-108 | | MC401413 |
| UNITS単位 mm | — | — | — | — | |

L-015-B-10-82-A4

| REVISIONS変更 |
|---|
| △1 61.3.25 松場 |
| (改) PS-828参照 |

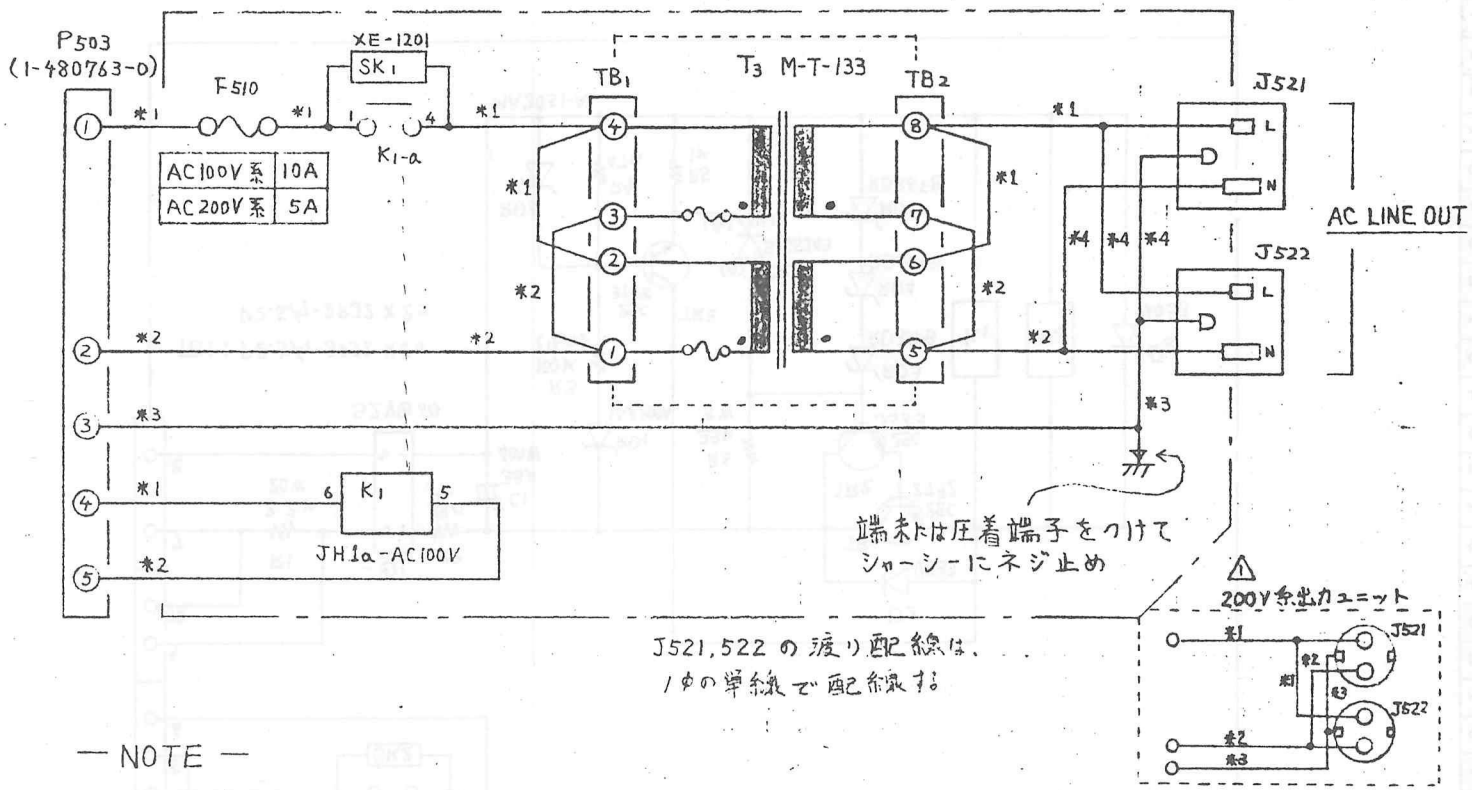


J521,522の渡り配線は、
1φの単線で配線する

— NOTE —

1) 配線材

*1 UL Cat No.1015 AWG18 茶
*2 〃 〃 〃 青
*3 WL2H-50/0.18 緑/黄
*4 1φ.スズメッキ線にチューブ被覆

2) F510, J521,522 の形名 及び TB1,2 の配線.

| | | AC100V系用 | AC200V系用 |
|---|---|---|---|
| 1 | F510 | △1 ~~313~~ 326 010 (10A) | 313 005 (5A) |
| 2 | J521,522 | AC-G10BB44 | 418037 |
| | (取り付け金具) | PTU-004⑤ (MM310704) | PTU-004⑥ (MM310705) |
| 3 | TB1 | ①*2③, ②*1④ | ②*1③ |
| | TB2 | ⑤*2⑦, ⑥*1⑧ | ⑥*1⑦ |

Aloka

3RD ANGLE PROJECTION 第3角法
SCALE 尺度 —
UNITS 単位 mm

TITLE 名称: TRANSFOMER UNIT
DRAWN 製図: —
DESIGNED 設計: 開1 '86.9.8 湯田
CHECKED 検図: 南7G
APPD 承認: —
MODEL 形名: PTU-004
DRAWING NO. 図番: MC401028
1/1

L-015-B-10-82-A4

注1) 色指定の数字の上に ― 印 が付いた線材は、UL1015 AWG20
〃 ° 印 〃 UL1032 AWG22
〃 × 印 〃 UL1015 AWG18
〃 無印 〃 UL1007 AWG22

注2) ボリウムに半田付後 φ3 スミチューブV透明をかぶせて熱収縮させる。

注3) Q001, D001へ半田付後、スミチューブ F φ2.5 赤、をかぶせて熱収縮させる。

注4) インレットフィルタに半田付後、スミチューブ F φ5.0 黒をかぶせて熱収縮させる。

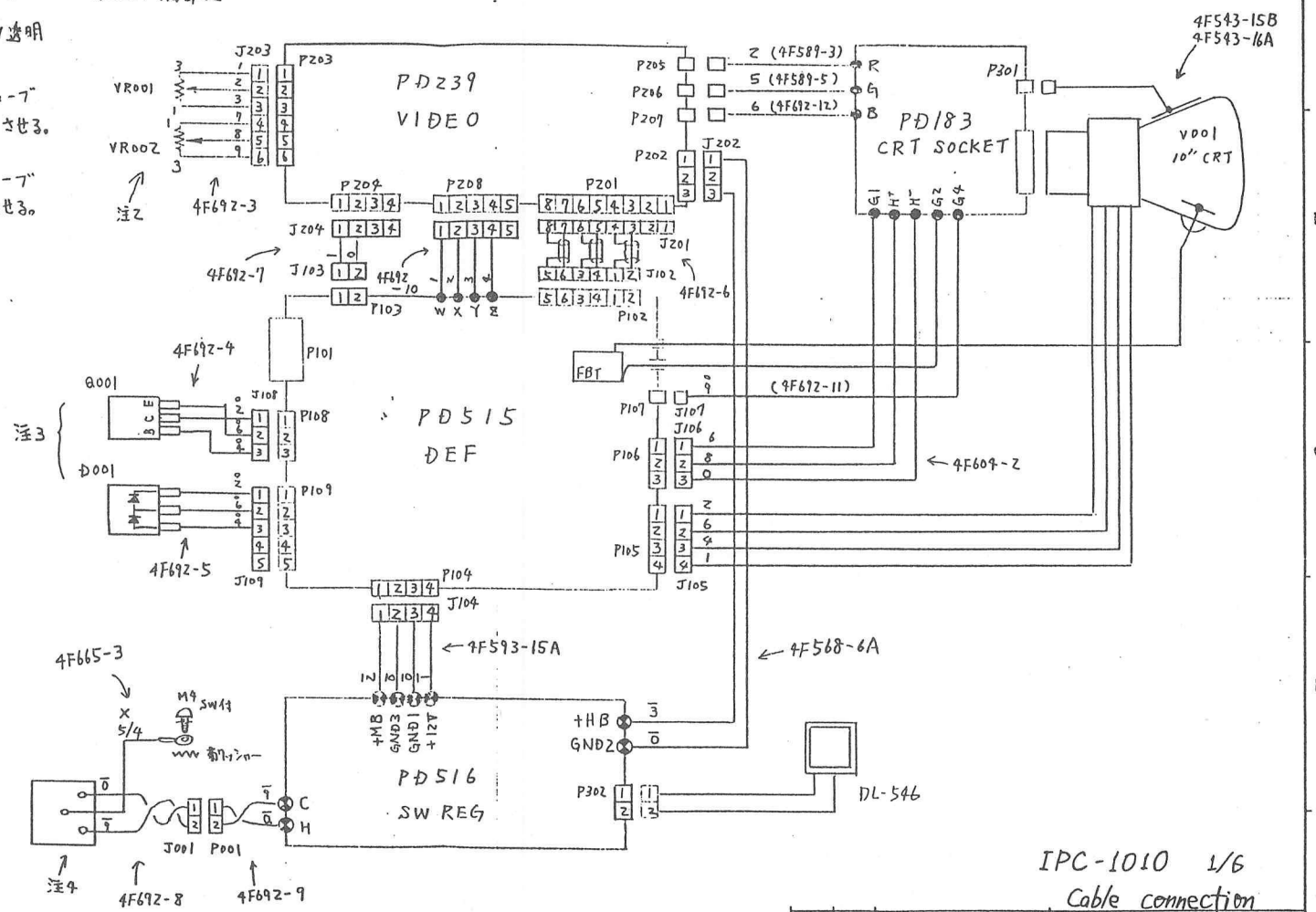


IPC-1010 1/6
Cable connection

| | | | |
|---|---|---|---|
| MATELIAL | DR 赤谷 | DATE 90.8.1 | TITLE QA1004 結線図 |
| FINISH | DSGN 赤谷 | DATE 90.8.1 | |
| TOLERANCE | CHK 宮入 | DATE 90.8.2 | |
| SCALE 〃 | APPD 鷲谷 | DATE 90.8.2 | SIZE A3 |

Quality, Quantity, Quickly
CHUOMUSEN CO., LTD.
DWG NO 3F692-2

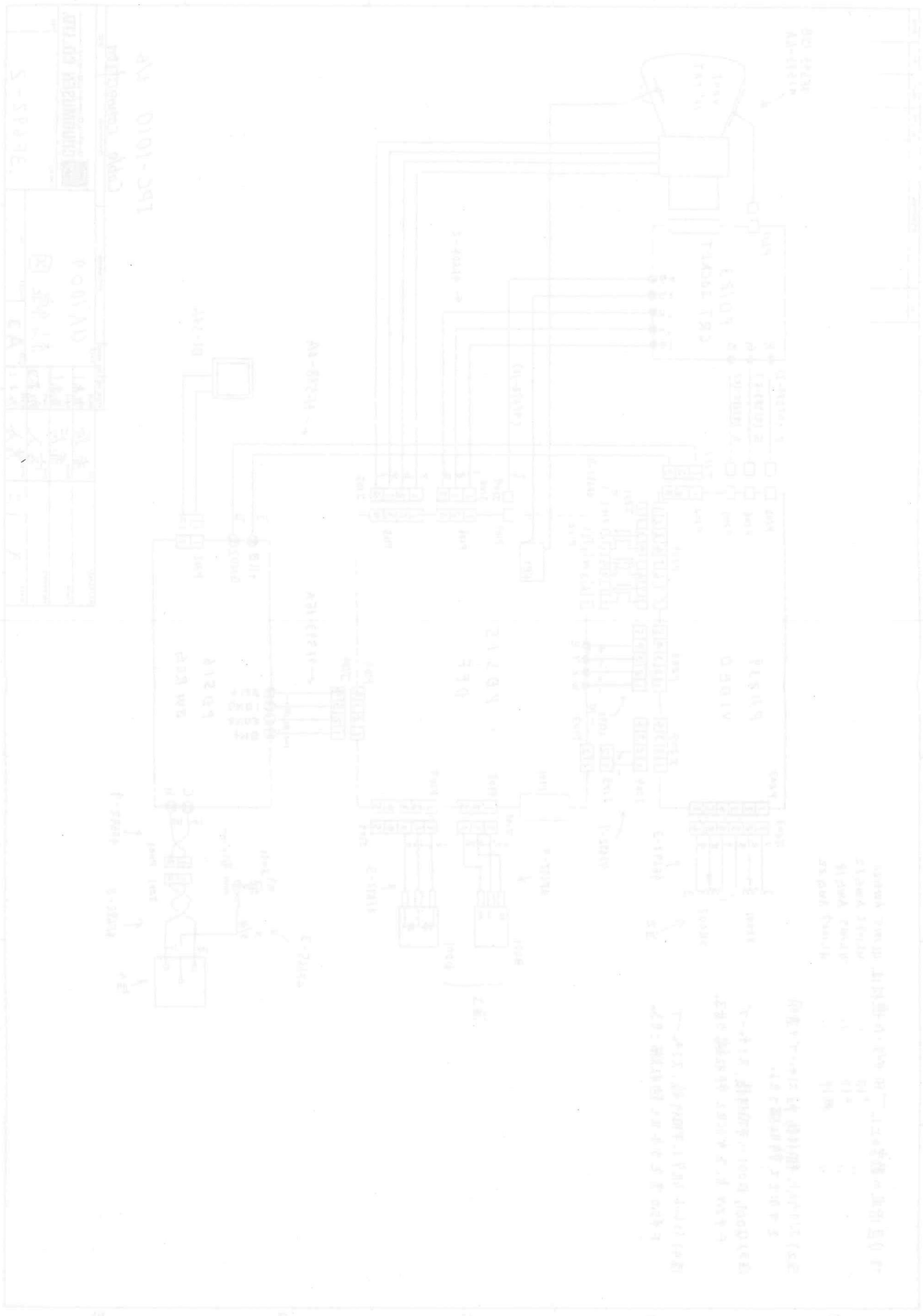

| REV | DESCRIPTION | ECO. NO. | DATE | BY | APPD. |
|---|---|---|---|---|---|
| A | CHG: R63, R64 etc | | '92.6.17 | J.A | |

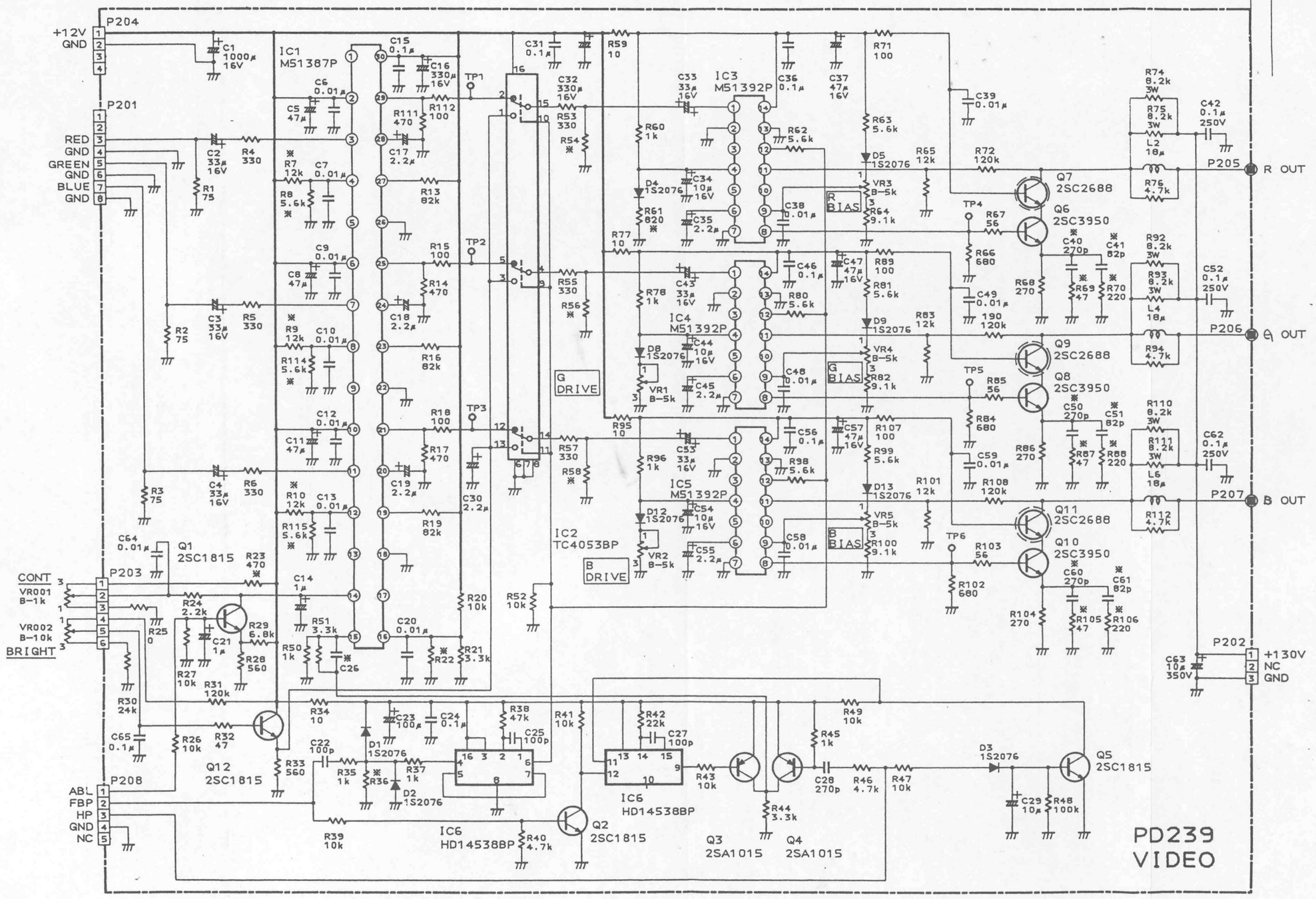


NOTES

1. All capacitors are 50WV unless otherwise noted. Unit is in FARAD (F).
2. All resistors are 0.25W unless otherwise noted. Unit is in OHM (Ω).
3. Components marked with ※ are subject to change without notice.
4. Semiconductors may be changed for equivalent ones.

IPC-1010 2/6
Video circuit

| | | | |
|---|---|---|---|
| MATERIAL | DR. K. Hukuda | DATE 92.6.17 | TITLE QA1004,-01 VIDEO CIRCUIT DIAGRAM |
| FINISH | DSGN J. Akatani | DATE '92.6.17 | |
| TOLERANCE | CHK T. Kugimoto | DATE 92.6.18 | |
| SCALE ∠ IN mm | APPD M. Maruta | DATE '92.6.18 | SIZE A 3 SHEET 1 OF 1 |

Quality, Quantity, Quickly
CHUOMUSEN CO., LTD.

DWG NO. E 3A692-202 REV A



89E 2,000 ⊛ 60g ⊠334

| REV | DESCRIPTION | ECO. NO. | DATE | BY | APPD |
|---|---|---|---|---|---|
| B | ADD: Q11, D17, R115, R116, R117 etc | EC 9598 | '92.9.21 | J.A | |

# PD515 DEF

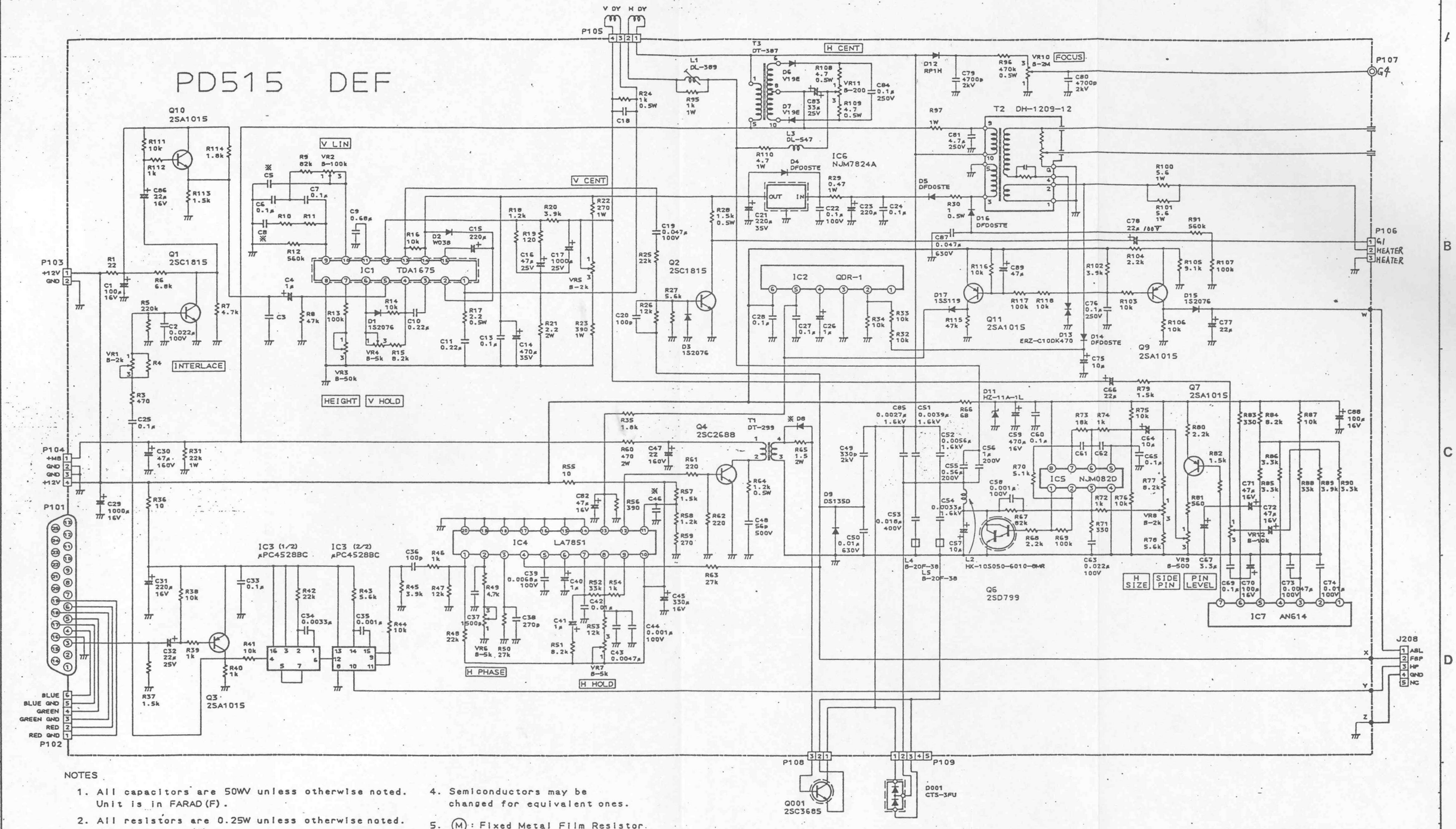


NOTES

1. All capacitors are 50WV unless otherwise noted. Unit is in FARAD (F).
2. All resistors are 0.25W unless otherwise noted. Unit is in OHM (Ω).
3. Components marked with ※ are subject to change without notice.
4. Semiconductors may be changed for equivalent ones.
5. (M): Fixed Metal Film Resistor.

IPC-1010 3/6
DEF circuit for NTSC

| | | | | | |
|---|---|---|---|---|---|
| MATERIAL | DR J.Kobayashi 92.4.21 | ITEM NO. | NO.REQD | PART NAME | DESCRIPTION / SPEC |
| FINISH | DSGN J.Akutani 92.4.21 | TITLE | QA1004 DEF CIRCUIT DIAGRAM | | |
| TOLERANCE | CHK T.Kujimoto 92.4.21 | | | | |
| SCALE / IN mm | APPD M.Maruta 92.4.22 | SIZE A2 | SHEET OF | DWG NO. E 2A692-201 | REV B |

3Q CHUOMUSEN CO., LTD.

# PD515 DEF

| REV | DESCRIPTION | ECO. NO | DATE | BY | APPD |
|---|---|---|---|---|---|
| | | | | | |

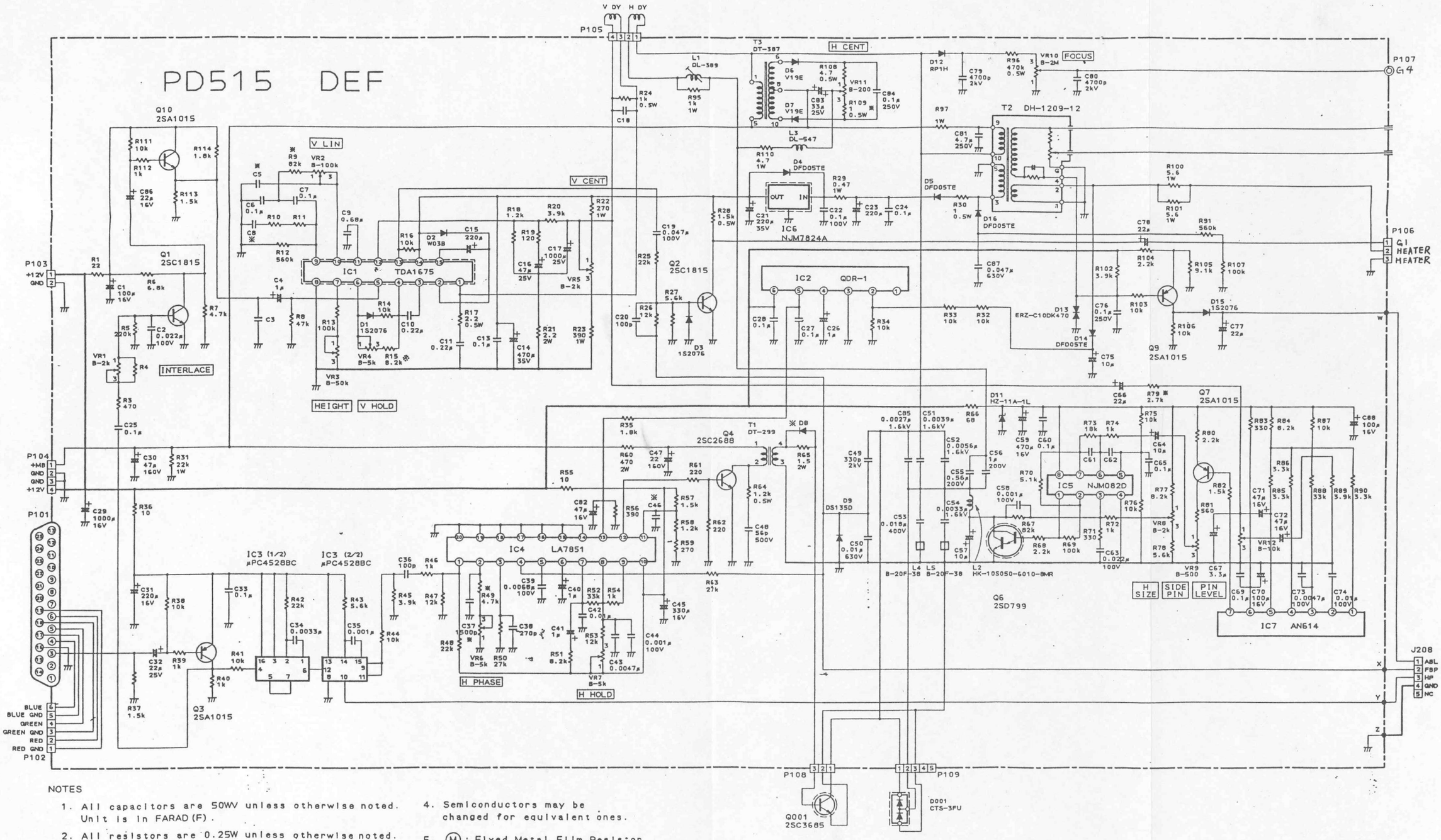


NOTES

1. All capacitors are 50WV unless otherwise noted. Unit is in FARAD (F).
2. All resistors are 0.25W unless otherwise noted. Unit is in OHM (Ω).
3. Components marked with ※ are subject to change without notice.
4. Semiconductors may be changed for equivalent ones.
5. (M) : Fixed Metal Film Resistor

IPC-1010 4/6

**DEF circuit for PAL**

| | | ITEM NO. | NO.REQD | PART NAME | DESCRIPTION | SPEC |
|---|---|---|---|---|---|---|
| MATERIAL | DR J.Kobayashi | DATE 90.11.6 | TITLE | QA1004-01 DEF CIRCUIT DIAGRAM | 3Q CHUOMUSEN CO., LTD. | |
| FINISH | DSGN T.Akatani | DATE 90.11.6 | | | DWG NO. E 2A692-205 | REV |
| TOLERANCE | CHK T.Mizushi | DATE 90.11.6 | | | | |
| SCALE / IN mm | APPD M.Sagitani | DATE 90.11.6 | SIZE A2 | SHEET OF | | |

| REV | DESCRIPTION | ECO. NO. | DATE | BY | APPD |
|---|---|---|---|---|---|
| | | | | | |

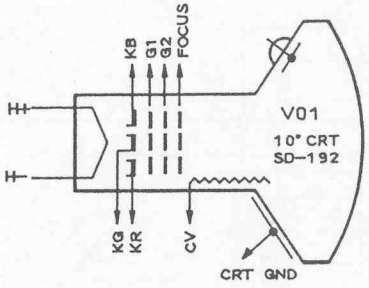


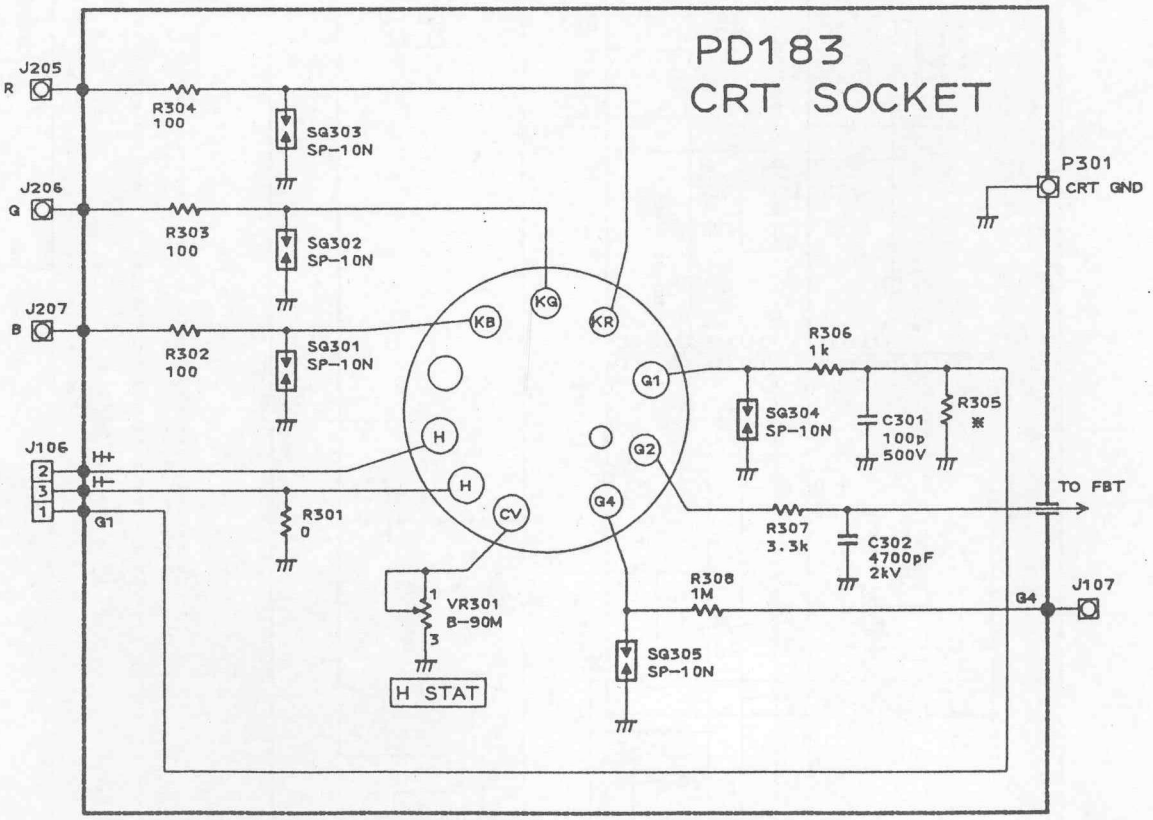


NOTES

1. All resistors are 0.5W unless otherwise noted. Unit is in OHM(Ω).
2. Components marked with ※ are subject to change without notice.
3. Semiconductors may be changed for equivalent ones.

IPC-1010 5/6

CRT socket circuit

| ITEM NO. | NO. REQD | PART NAME | DESCRIPTION | SPEC |
|---|---|---|---|---|

| | | | |
|---|---|---|---|
| MATERIAL | DR K. Takashima | DATE '90.10.1 | TITLE QA1004,-01 CRT SOCKET CIRCUIT DIAGRAM |
| FINISH | DSGN J. Akatani | DATE '90.10.2 | |
| TOLERANCE | CHK T. Mitsui | DATE '90.10.2 | |
| SCALE 1 / IN mm | APPD M. Sagitani | DATE '90.10.3 | SIZE 7-114 SHEET 1 OF 1 |

QQQ Quality, Quantity, Quickly — CHUOMUSEN CO.,LTD.

DWG NO. E 4A692-204 REV

FROM COPY TO

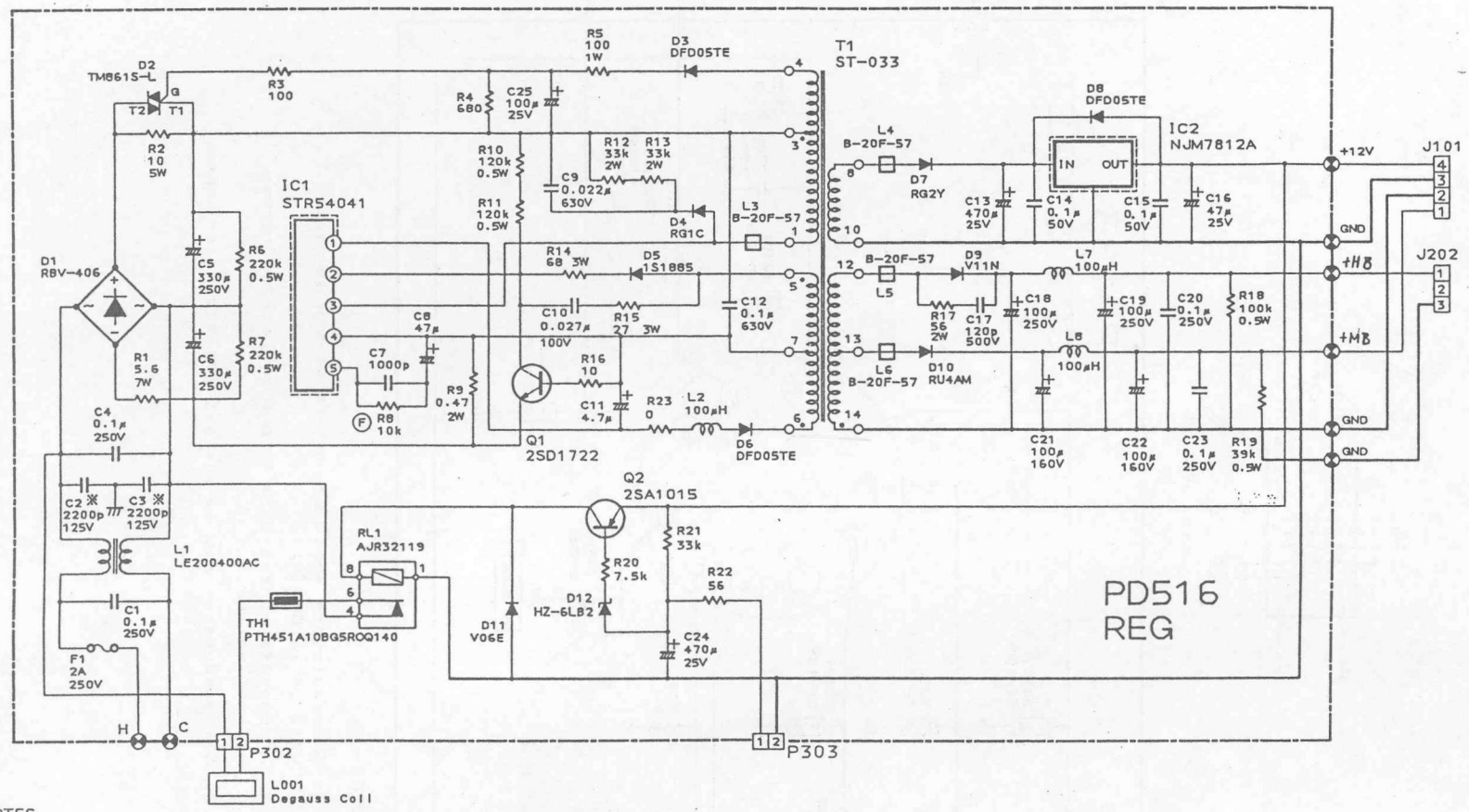


NOTES

1. All capacitors are 100WV unless otherwise noted. Unit is in FARAD (F).
2. All resistors are 0.25W unless otherwise noted. Unit is in OHM (Ω).
3. Components marked with ※ are subject to change without notice.
4. Semiconductors may be changed for equivalent ones.
5. (F): Fusing Resistor

IPC-1010 6/6
REG circuit

| | | | |
|---|---|---|---|
| MATERIAL | DR K. Tarashima | DATE 90.9.27 | TITLE QA1004, -01 REG CIRCUIT DIAGRAM |
| FINISH | DSGN J. Akatani | DATE 90.9.27 | Quality, Quantity, Quickly CHUOMUSEN CO., LTD. |
| TOLERANCE | CHK T. Miyairi | DATE 90.9.27 | DWG NO. E 3A692-203 |
| SCALE / | APPD M. Sagitani | DATE 90.9.27 | SIZE A 3 SHEET 1 OF 1 |

7-115

85L 2,000 ⊕ 60g ⊠331

| REV | DESCRIPTION | ECO. NO. | DATE | BY | APPD. |
|---|---|---|---|---|---|

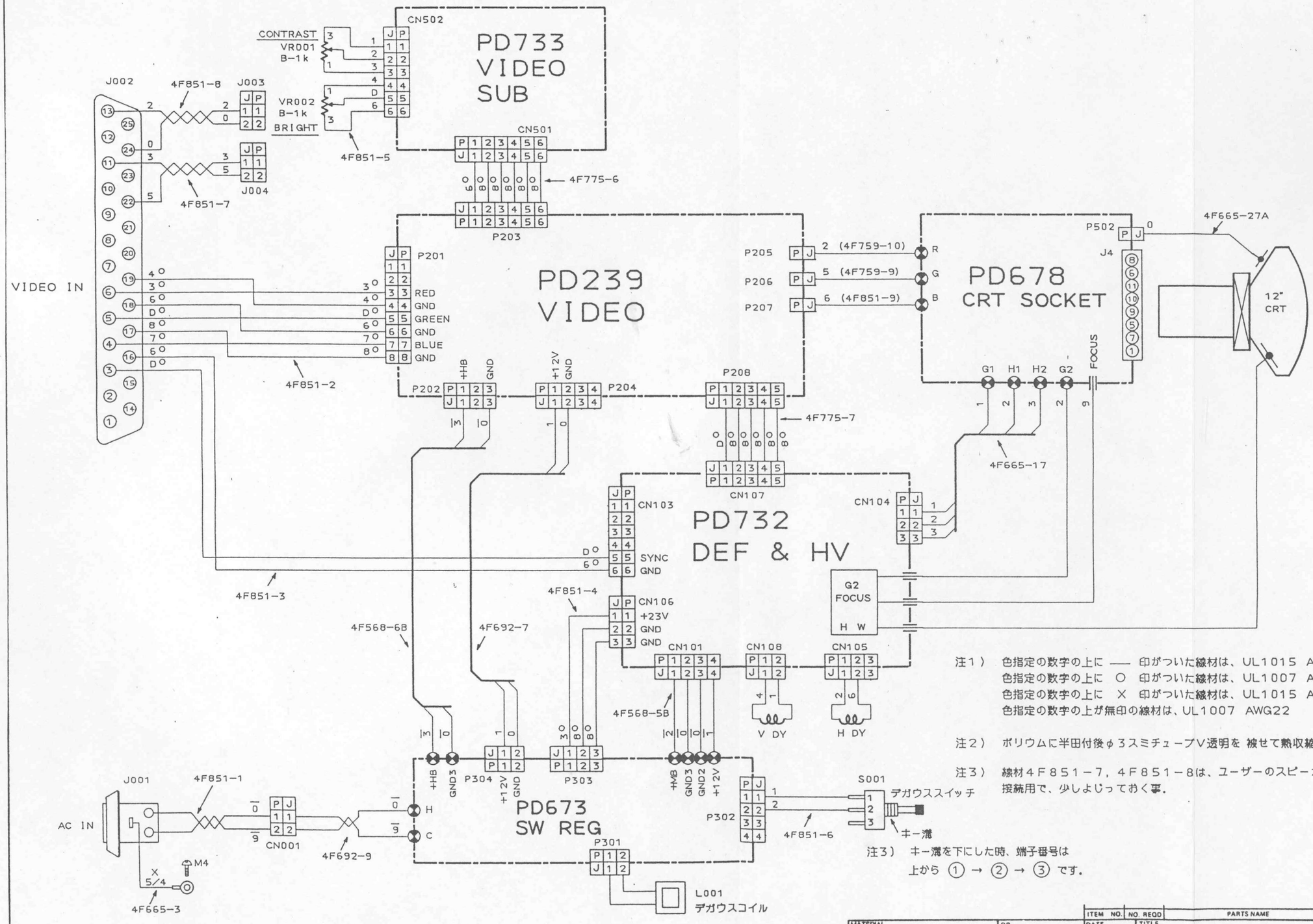


注1） 色指定の数字の上に —— 印がついた線材は、UL1015 AWG20
色指定の数字の上に ○ 印がついた線材は、UL1007 AWG26
色指定の数字の上に × 印がついた線材は、UL1015 AWG18
色指定の数字の上が無印の線材は、UL1007 AWG22

注2） ボリウムに半田付後φ3スミチューブV透明を 被せて熱収縮させる。

注3） 線材4F851-7，4F851-8は、ユーザーのスピーカ
接続用で、少しよじっておく事。

注3） キー溝を下にした時、端子番号は
上から ① → ② → ③ です。

**IPC-1230W 1/6**
**Cable connection**

| ITEM NO. | NO. REQD | PARTS NAME | DESCRIPTION | SPEC |
|---|---|---|---|---|

| | | | |
|---|---|---|---|
| MATERIAL | DR K. Ohtake 92.8.24 | TITLE QA1214 | Quality, Quantity, Quickly CHUOMUSEN CO.,LTD. |
| FINISH | DSGN J. Akatsu 92.8.24 | CONNECTION DIAGRAM | |
| TOLERANCE | CHK T. Kushimoto 92.8.25 | | DWG NO. E 3A851-401 REV |
| SCALE / IN mm | APPD M. Maruta 92.8.26 | SIZE A3 SHEET 1 OF 1 | |



88G 1,000 ㊗ 60g 図334

| REV | DESCRIPTION | ECO. NO. | DATE | BY | APPD. |
|---|---|---|---|---|---|
| | | | | | |

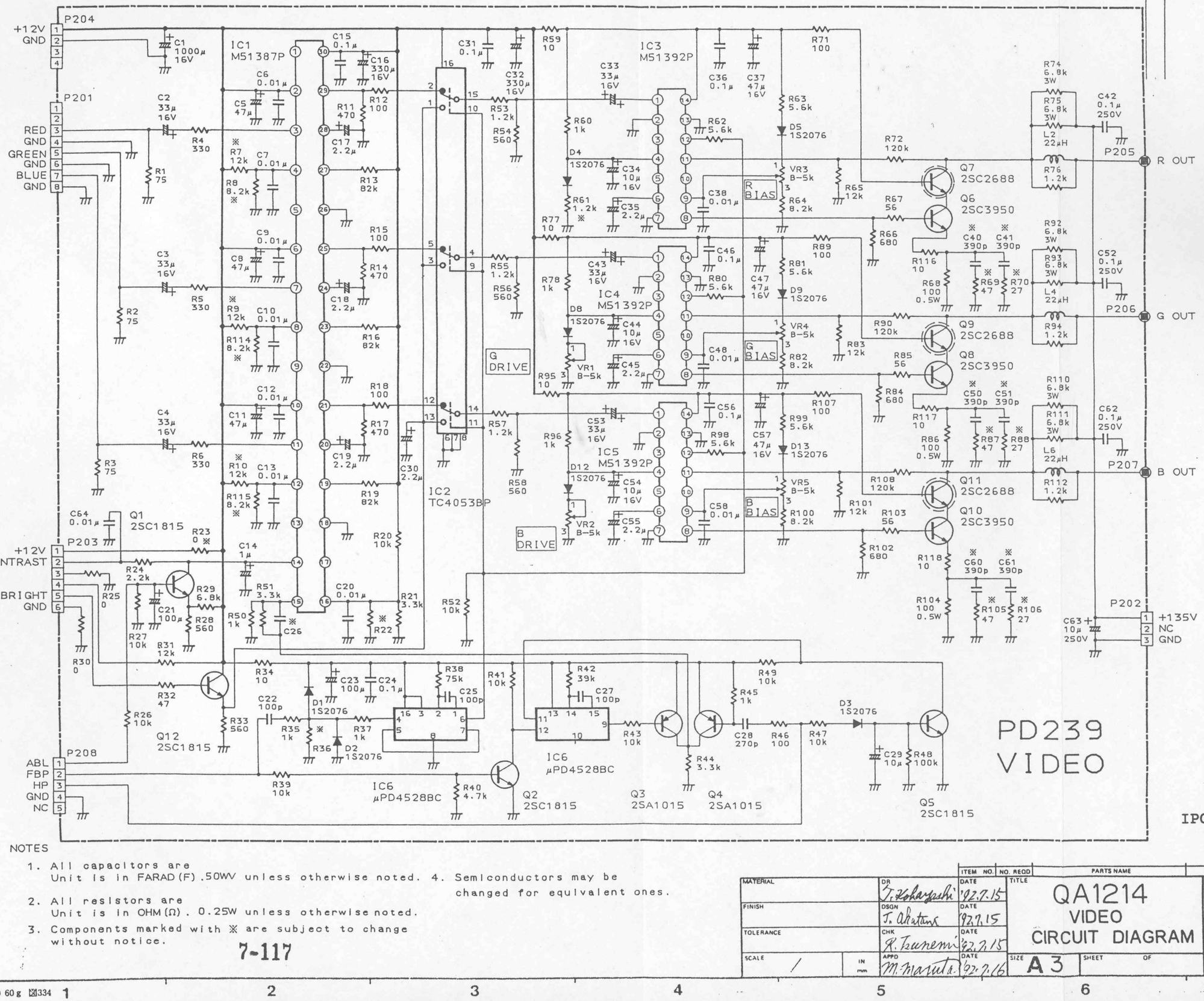


IPC-1230W 2/6
Video circuit

NOTES

1. All capacitors are Unit is in FARAD (F). 50WV unless otherwise noted.
2. All resistors are Unit is in OHM (Ω). 0.25W unless otherwise noted.
3. Components marked with ※ are subject to change without notice.
4. Semiconductors may be changed for equivalent ones.

7-117

| ITEM NO. | NO. REQD | PARTS NAME | DESCRIPTION | SPEC |
|---|---|---|---|---|

| | | | |
|---|---|---|---|
| MATERIAL | DR T. Kobayashi | DATE '92.7.15 | TITLE QA1214 VIDEO CIRCUIT DIAGRAM |
| FINISH | DSGN T. Akatsuka | DATE '92.7.15 | Quality, Quantity, Quickly CHUOMUSEN CO.,LTD. |
| TOLERANCE | CHK R. Tsunemi | DATE '92.7.15 | DWG NO. E 3A851-202 REV |
| SCALE / IN mm | APPD M. Matsuda | DATE '92.7.16 | SIZE A3 SHEET OF |

2,000 ㊗ 60 g ⊠334

| REV | DESCRIPTION | ECO. NO | DATE | BY | APPD |
|---|---|---|---|---|---|
| | | | | | |

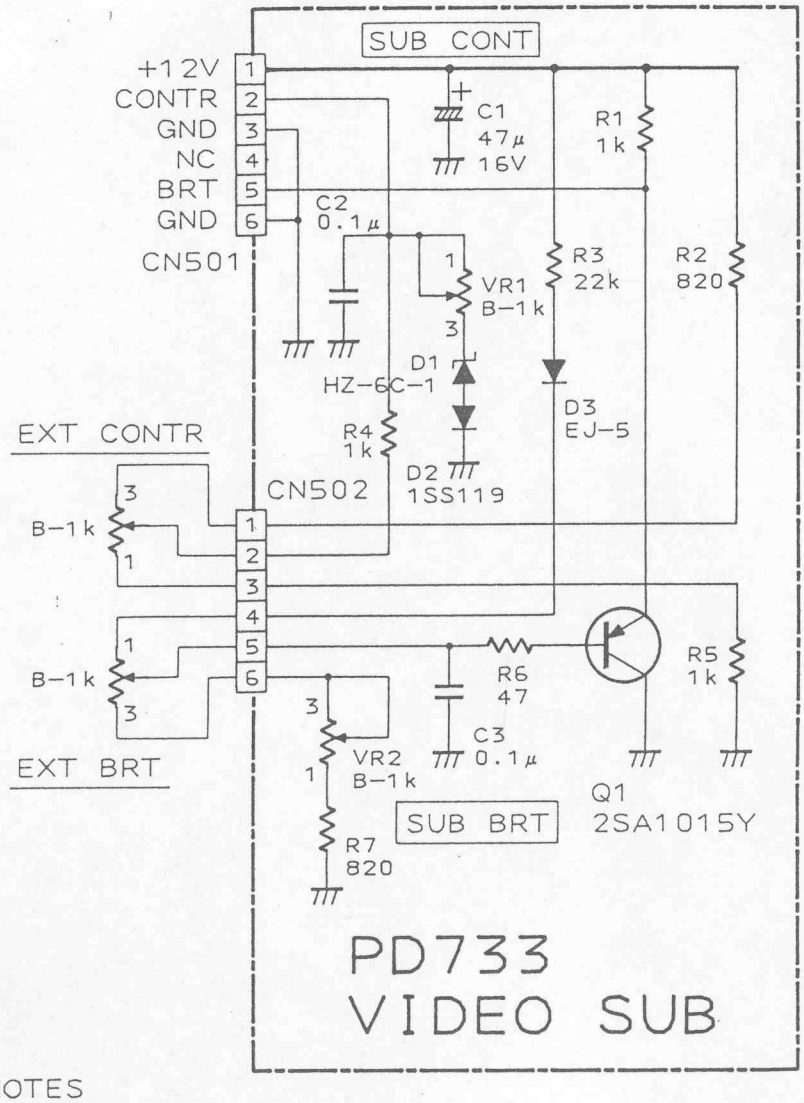


NOTES

1. All capacitors are 50WV unless otherwise noted. Unit is in FARAD (F).
2. All resistors are 0.25W unless otherwise noted. Unit is in OHM (Ω).
3. Semiconductors may be changed for equivalent ones.

7-118

**IPC-1230W 3/6**
**Video sub circuit**

| ITEM NO | NO REQD | PART NAME | DESCRIPTION | SPEC |
|---|---|---|---|---|

| | | | | |
|---|---|---|---|---|
| MATERIAL | DR T. Kobayashi | DATE '92.7.15 | TITLE QA1214 VIDEO SUB CIRCUIT DIAGRAM | Quality, Quantity, Quickly — CHUOMUSEN CO.,LTD. |
| FINISH | DSGN T. Akatani | DATE '92.7.15 | | |
| TOLERANCE | CHK R. Tsuneno | DATE '92.7.15 | | DWG NO. E 4A851-203 REV |
| SCALE 1 IN mm | APPD M. Maruta | DATE '92.7.16 | SIZE A4 SHEET OF | |

| REV | DESCRIPTION | ECO. NO. | DATE | BY | APPD |
|---|---|---|---|---|---|
| A | CHG ; R110, R76, VR2, VR8 | | '92.9.3 | J.A | |

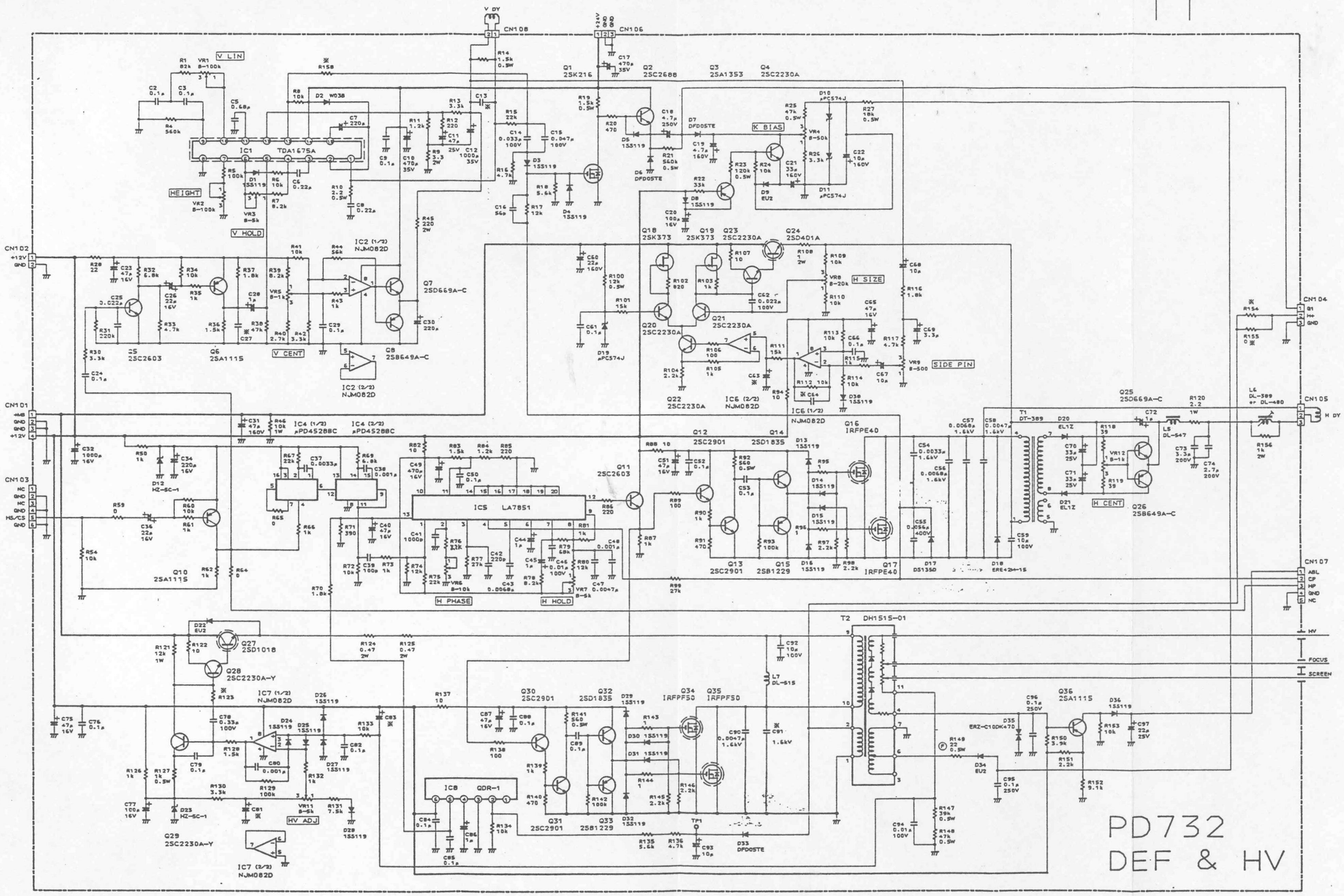


NOTES

1. All capacitors are 50WV unless otherwise noted. Unit is in FARAD (F).
2. All resistors are 0.25W unless otherwise noted. Unit is in OHM (Ω).
3. Components marked with ※ are subject to change without notice.
4. Semiconductors may be changed for equivalent ones.
5. (F) : Fuse Resistor

7-119

**IPC-1230W 4/6**
**DEF & HV circuit**

| | | ITEM NO. | NO.REQD | PART NAME | DESCRIPTION | SPEC |
|---|---|---|---|---|---|---|
| MATERIAL | DR J. Kobayashi '92.9.2 | TITLE | QA1214 DEF & HV CIRCUIT DIAGRAM | 3Q CHUOMUSEN CO.,LTD. | | |
| FINISH | DSGN J. Akatani 9.2 | | | | | |
| TOLERANCE | CHK T. Fujimoto 9.9 | | | DWG NO. E 2A851-201 | REV A | |
| SCALE / IN mm | APPD M. Maruta 92.9.4 | SIZE A2 | SHEET OF | | | |

| REV | DESCRIPTION | ECO NO | DATE | BY | APPD |
|---|---|---|---|---|---|
| | | | | | |

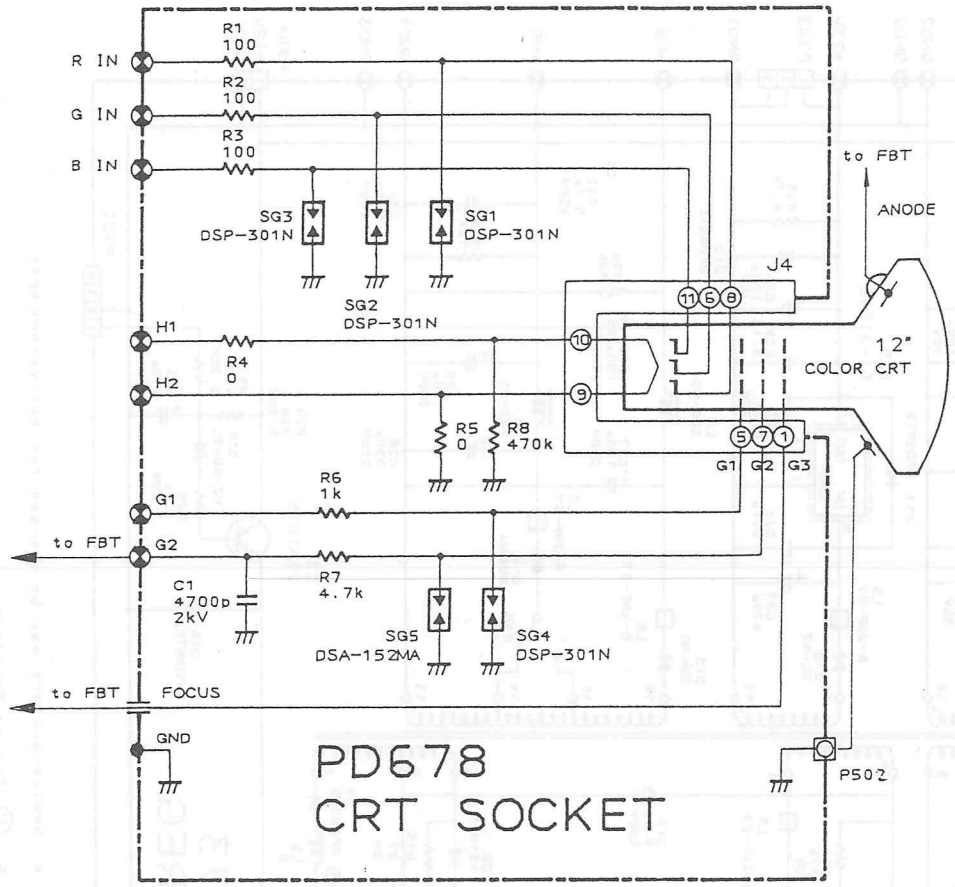


NOTES

1. Capacitors Unit are in FARAD (F).
2. All resistors are 0.5W unless otherwise noted. Unit is in OHM (Ω).
3. Components marked with ※ are subject to change without notice.

7-120

**IPC-1230W 5/6**
**CRT socket circuit**

| ITEM NO | NO REQD | PART NAME | DESCRIPTION | SPEC |
|---|---|---|---|---|
| | | | | |

| | | | | | |
|---|---|---|---|---|---|
| MATERIAL | DR T. Kobayashi | DATE '92.7.15 | TITLE QA1214 CRT SOCKET CIRCUIT DIAGRAM | Quality, Quantity, Quickly — CHUOMUSEN CO.,LTD. | |
| FINISH | DSGN J. Akatani | DATE '92.7.15 | | DWG NO E 4A851-205 | REV |
| TOLERANCE | CHK R. Izumi | DATE '92.7.15 | | | |
| SCALE 1 / N mm | APPD M. Maruta | DATE '92.7.16 | SIZE A4 | SHEET OF | |

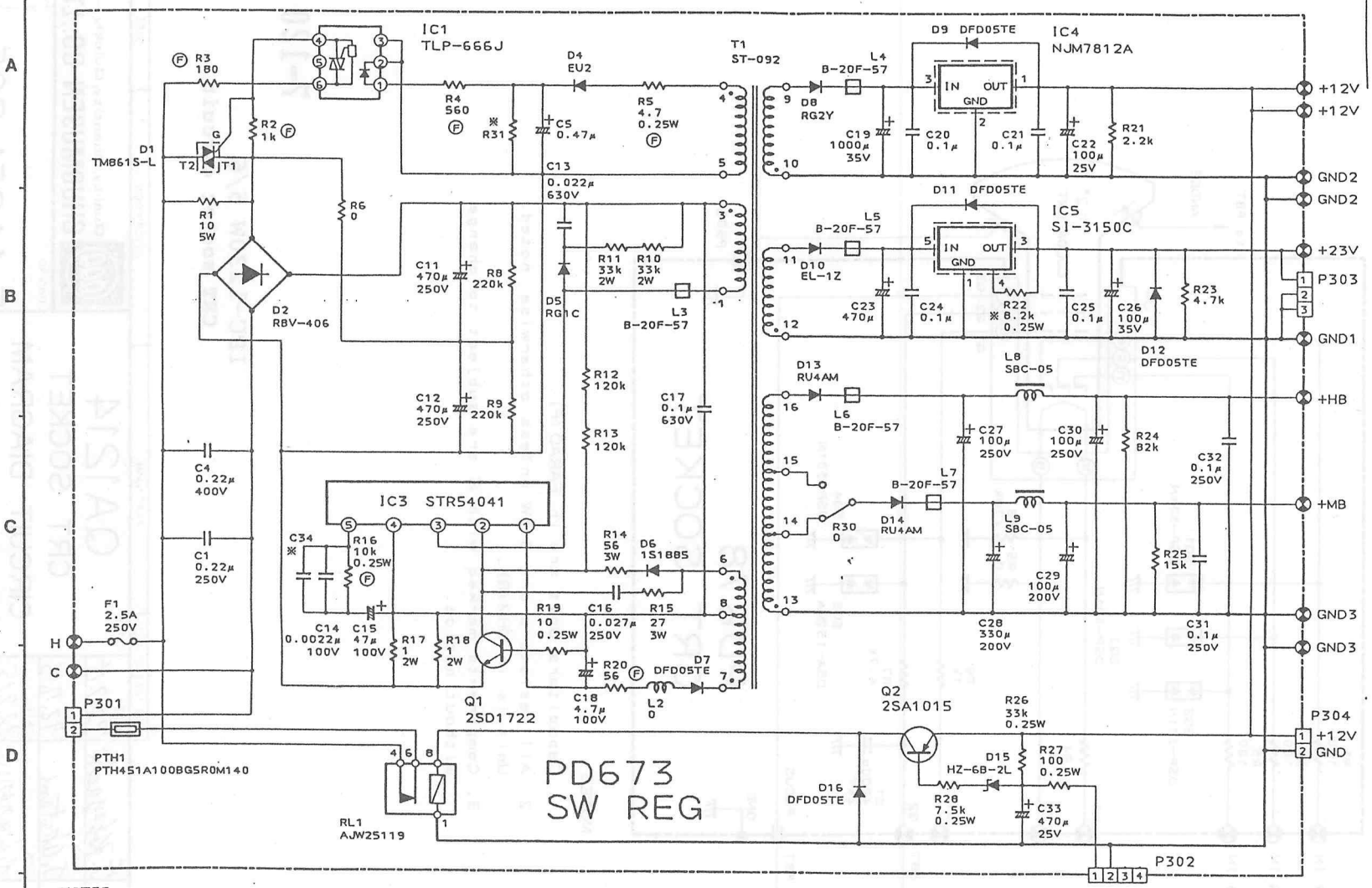


NOTES

1. All capacitors are 50WV unless otherwise noted. Unit is in FARAD (F).
2. All resistors are 0.5W unless otherwise noted. Unit is in OHM (Ω).
3. Components marked with ※ are subject to change without notice.
4. Semiconductors may be changed for equivalent ones.
5. (F) : Fusing Resistor

IPC-1230W 6/6
SW REG circuit

| | | | |
|---|---|---|---|
| MATERIAL | DR T. Kobayashi | DATE 92.7.15 | TITLE QA1214 SW REG CIRCUIT DIAGRAM |
| FINISH | DSGN J. Akatani | DATE 92.7.15 | |
| TOLERANCE | CHK R. Tsunemi | DATE 92.7.15 | |
| SCALE / | APPD M. Maruta | DATE 92.7.16 | SIZE A3 |

Quality, Quantity, Quickly
CHUOMUSEN CO., LTD.

DWG NO E 3A851-204

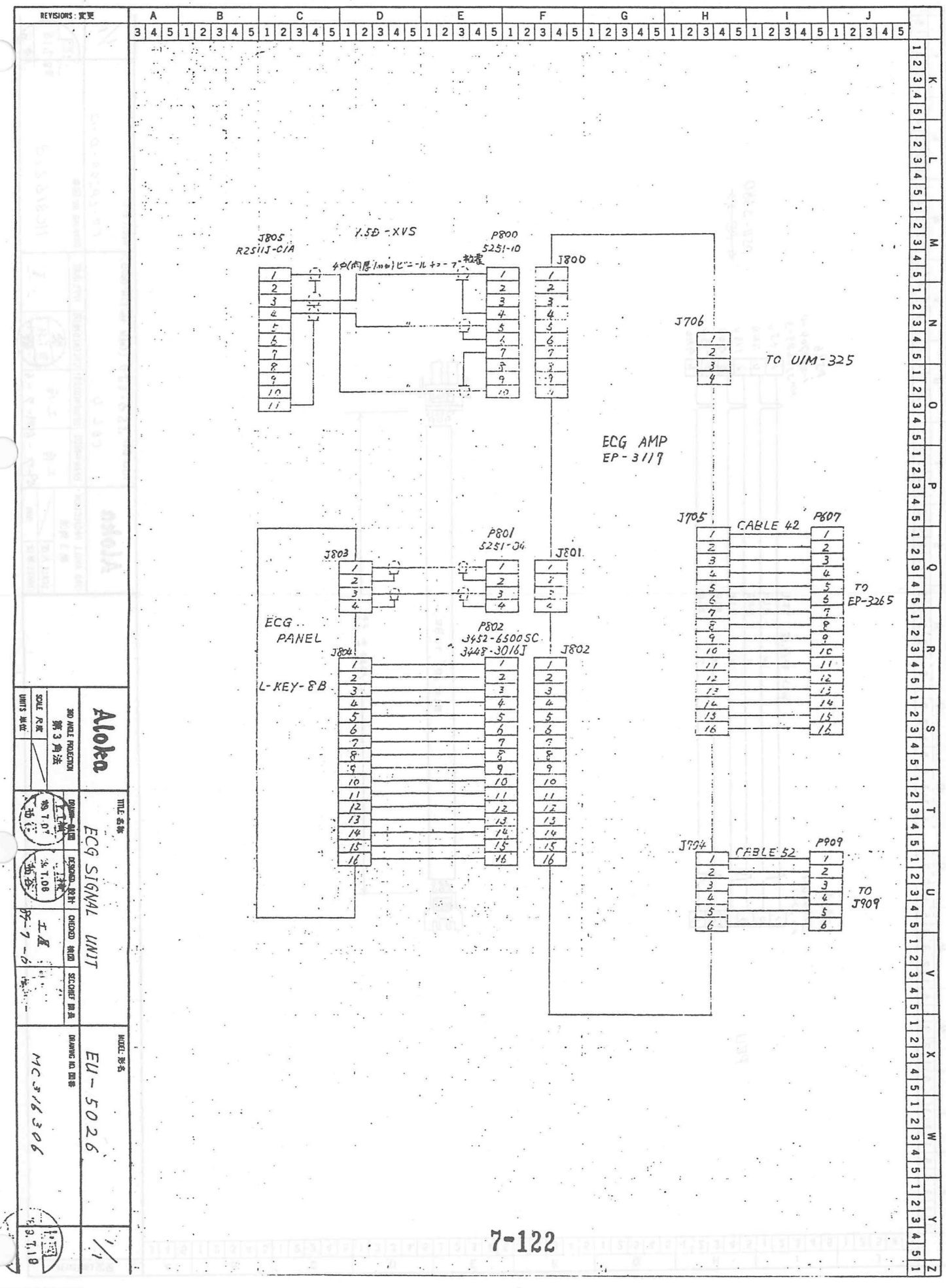
REVISIONS : 変更
J805
R2511J-01A
1.5D-XVS
P800
5251-10
J800
J706
TO UIM-325
ECG AMP
EP-3117
J705
CABLE 42
P607
TO
EP-3265
J803
P801
5251-04
J801
ECG
PANEL
L-KEY-8B
J804
P802
3452-6500SC
3448-3016J
J802
J704
CABLE 52
P909
TO
J909
Aloka
3RD ANGLE PROJECTION
第3角法
SCALE 尺度
UNITS 単位
TITLE 名称
ECG SIGNAL UNIT
DRAWN 製図
DESIGNED 設計
CHECKED 検図
SEC.CHIEF 課長
MODEL 形名
EU-5026
DRAWING NO. 図番
MC316306
1/1

PEU

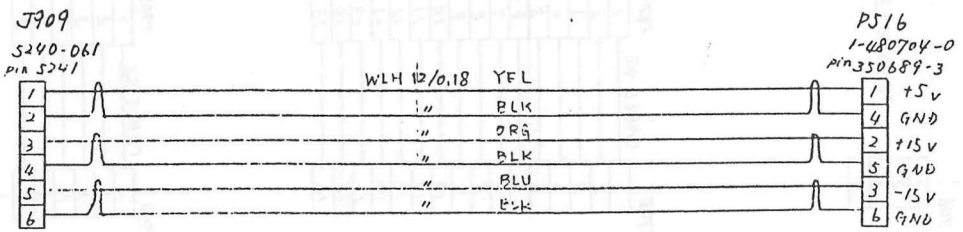


PSU-S680
~~L-PS-43~~

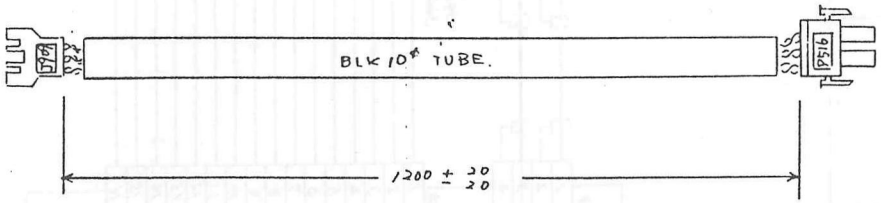


| | | | | | |
|---|---|---|---|---|---|
| REVISIONS 変更 | Aloka | TITLE 名称 SSD-680 (Cable for PEU-680B) CBL 4 | | MODEL 形名 CO-LPS40-D-12 | 1/1 |
| | 3RD ANGLE PROJECTION 第3角法 | DRAWN 製図 工俊 89-7-6 | DESIGNED 設計 工俊 89-7-6 | CHECKED 検図 89.7.06 | APPD 承認 | DRAWING NO. 図番 MC31621J | '89.7.13 |
| | SCALE 尺度 / UNITS 単位 mm | | | | | | |

L-013-10-82-A

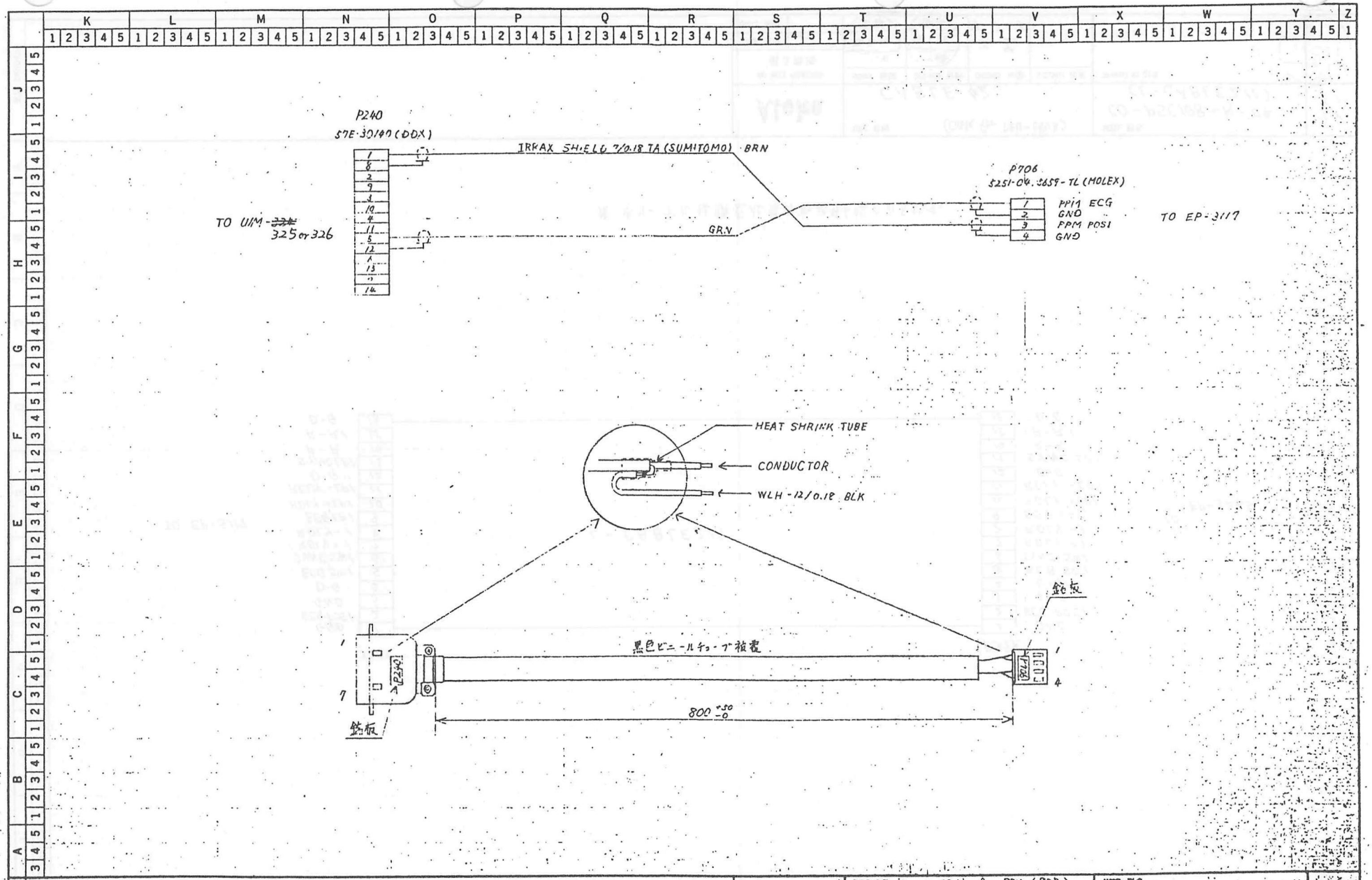


| | | | | | |
|---|---|---|---|---|---|
| Aloka | TITLE 名称 (Cable for PEU-680B) CABLE 34 | | | MODEL 形名 CO-PSC108-M-08 | 7/1 |
| 3RD ANGLE PROJECTION 第3角法 | DRAWN 制図 上工検 89.7.06 西谷 | DESIGNED 設計 西谷 89-7 6 | CHECKED 検図 土屋 89-7 9 | SEC.CHIEF 課長 | DRAWING NO. 図番 MC 316.215 |
| SCALE 尺度 | | | | | 89.7.13 |
| UNITS 単位 | | | | | |

REVISIONS: 変更

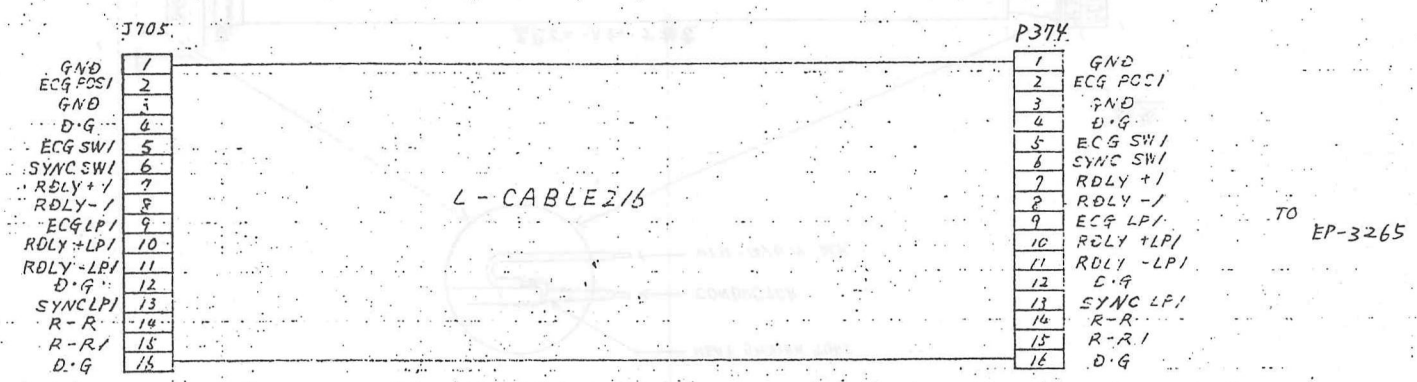


※ 本ケーブルは購売仕様の為信号系統のみを記す。

| | | | | | |
|---|---|---|---|---|---|
| Aloka | TITLE 名称 (Cable for PEU-680B) CABLE 42 | | | MODEL 形名 CO-PSC108-K-04 (L-CABLE216) | 1/1 |
| 3RD ANGLE PROJECTION 第3角法 | DRAWN 製図 | DESIGNED 設計 | CHECKED 検図 | SEC.CHIEF 課長 | DRAWING NO. 図番 |
| SCALE 尺度 | 89.7.06 | 89.7.06 | 工 | | MC3 |
| UNITS 単位 | 西谷 | 西谷 | 89-7-6 | | |

REVISIONS: 変更

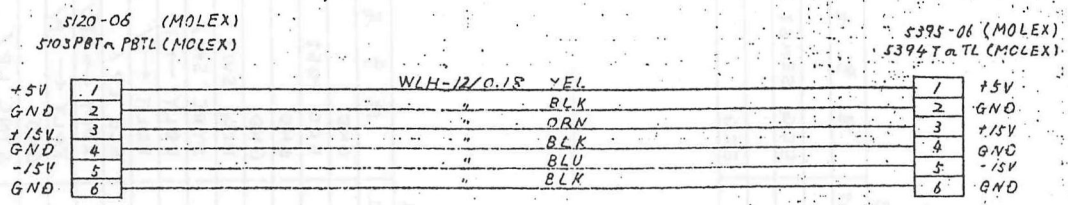


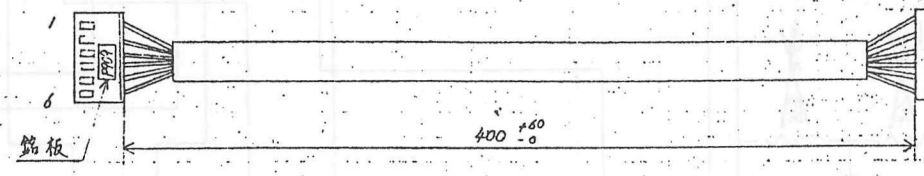


| | | | | | |
|---|---|---|---|---|---|
| Aloka | TITLE: 名称 (Cable for PEU-680B) CABLE 52 | | | | MODEL: 形名 CO-PEU680-A-02 |
| 3RD ANGLE PROJECTION 第3角法 | DRAWN 製図 上工検 99.7.08 西谷 | DESIGNED 設計 99.7.08 西谷 | CHECKED 検図 | SEC.CHIEF 班長 | DRAWING NO. 図番 MC 3152 13 |
| SCALE 尺度 / UNITS 単位 | | | | | |

REVISIONS: 変更

| | | | |
|---|---|---|---|
| '57/8/25 | 新規 | 定森 | / / |
| / / | | | / / |
| / / | | | / / |

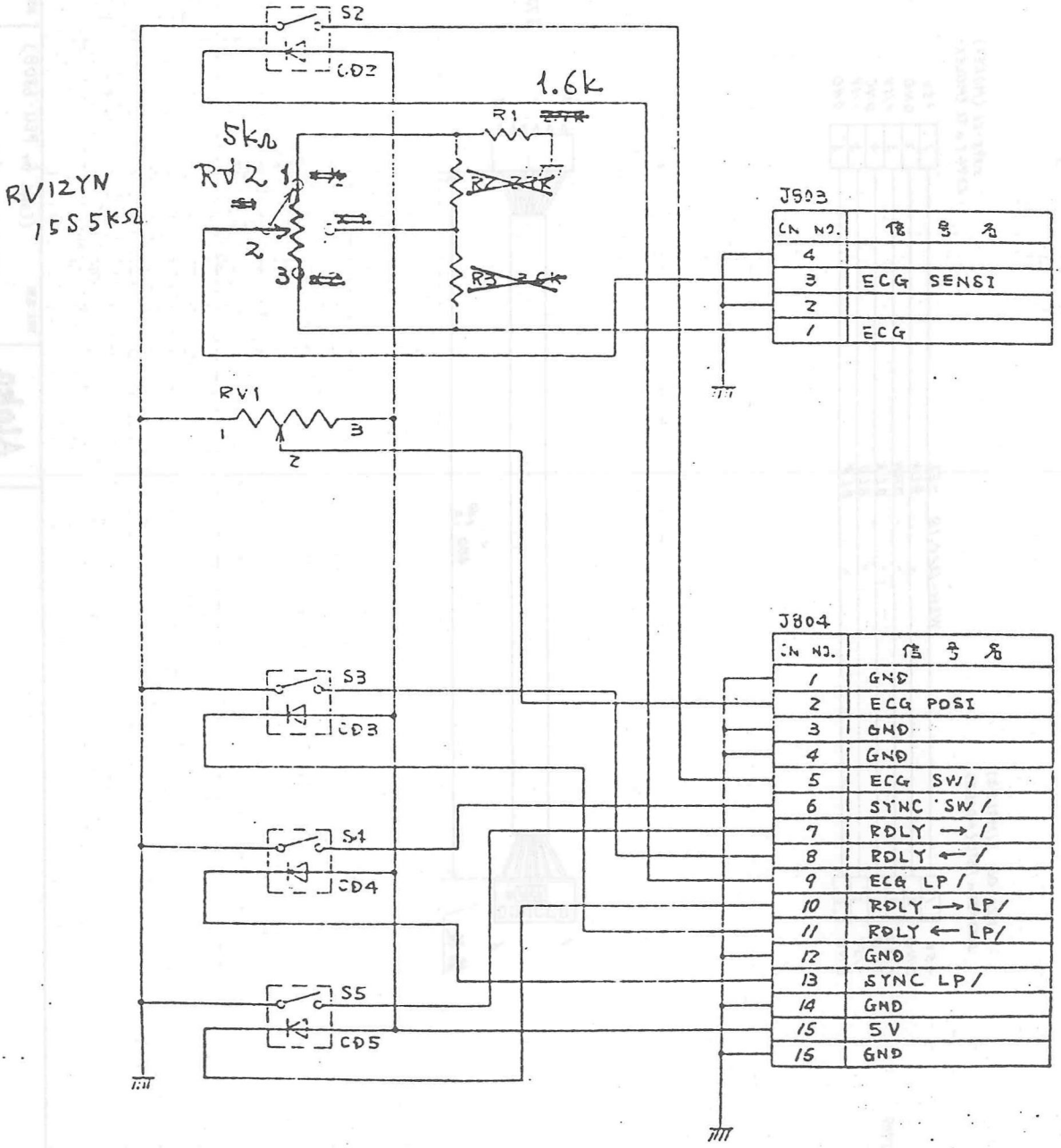


J803

| CN NO. | 信号名 |
|---|---|
| 4 | |
| 3 | ECG SENSI |
| 2 | |
| 1 | ECG |

J804

| CN NO. | 信号名 |
|---|---|
| 1 | GND |
| 2 | ECG POSI |
| 3 | GND |
| 4 | GND |
| 5 | ECG SW/ |
| 6 | SYNC SW/ |
| 7 | RDLY →/ |
| 8 | RDLY ←/ |
| 9 | ECG LP/ |
| 10 | RDLY →LP/ |
| 11 | RDLY ←LP/ |
| 12 | GND |
| 13 | SYNC LP/ |
| 14 | GND |
| 15 | 5V |
| 15 | GND |

| 三角法 | 材質 | | 処理 | | 受注先 | ALOKA |
|---|---|---|---|---|---|---|
| 単位:mm | | | 仕様書番号 | | 受注先図番 | |

| 製図 | 検図 | 承認 | 尺度 | 図番 | 名称 |
|---|---|---|---|---|---|
| | | | —— | 7-127 | アロカ(株) L-KEY-8.B |

和幸ゴム工業株式会社

INDPENDENT J302

O.P

IND TX

GEU-65

CBL800
CBL801

SPEAKER BP300

HEAD-PHONE JACK J334 EP-2510

J342 CBL48 P342

BLIND PANEL EP-2512 J367 P368 CBL47

TRACK BALL

POWER LAMP FULL KEY BOARD EP-3143

L-KEY-68 CN1

ACCU-STIC POWER

CBL18 J323 P323

EP-2960 (MAIN PANEL) J363 J365 J391 P363 P365 P391 J364 P364 J360 J361 J362 P360 P361 P362

L-KEY-19

CBL37

CBL98

COLOR MONITOR IPC-1230* (IPC-1010*)

CBL50

CBL624 P912 J912 LAMP

CBL41 CBL40 CBL39

PWR1 (B/b) CBL1

EP-3265 MAIN CONTLOR J386 J382 J383 J384 J373 J385 J379 P836 P382 P383 P384 P373 P385 P379 J376 J375 J374 P376 P375 P374 J377 J378 J371 J370 J381 J372 P371 P370 P381 P372

P378 CBL43 P700 SSZ-600 PHOT UNIT

J913 P913 PWR4 (Bg) CBL51 P703

CBL621 (F/n)

CBL 30 CBL 31 CBL 44 CBL 207

PROBE 1

PROBE 2

EP-3455 PROBE CHANGER J14 J3 J4 J5 P14

EP-3453-1~5X2

EP-3455 SELECTOR J6 J7 J8 J9 P3 P4 P5

EP-3456 TX1 J3

EP-3457 TX2 J3

EP-3458 PRE AMP J3 J4 J5 J6

S P

S P

EP-3459 RX FOCUS

EP-3459 RX FOCUS

EP 3461 MAIN AMP J146 J141 J146 J140 J147

S P

EP-3463 GAIN CONT J3 J4

EP-3464 TX TRIG

EP-3465 TIMING/ADRS J157

CBL11 CBL13 CBL147 CBL12 CBL15

EP-3466 MOTHER BOARD J100 J101 J102 J103 J104 J105 J106 J107 J108 J109 J110 J112 J113 J114 -1, -2

J121 J183 J185 J186 J188 J184 J180 J181 J182 J189 J190 J122 J123

CBL614 CBL613 CBL620 CBL622 CBL623 CBL611 CBL612

EP-3452 P1 P2

EP-3525 J164 J165 J160 J161 J162 J163 J166

CBL338

CBL9

CBL610

CBL608

PWR2 (B/b)

PWR7 (Bg)

IND TX

FFA-PSC CABL

FFA-188 DN-6

EP-3260 TX RX

EP-2810 CONTROLLER

EP-3269 FILTER

EP-2812 I.T.F

FFT

OUT PUT

J100 J110 J120 J130 J140 J150

EP-2801

CBL3 PWR3 (A/b)

FILTER

OPTION

CBL42 CBL34

EP-3117 ECG AMP P785 P784 P783 P882 P881 P880

L-KEY-8.8

CBL152

P909 J909

OPTION

CBL607 CBL609 P5 J5 TP19 EP-5100 COLOR CALCULATE

BATTERY

EP2913 MPU

EP-2629 AG-DC

EP-2930 VIDEO INT J1 J2 J3 P1 P2 P3

EP-2729 A/D D/A

EP-2651 COLOR D/A

EP-3114 COLOR POST PROCES

EP-3236 ADDRESS

EP-3247 B/W MEMORY

EP-3237 CINE MEMO (B/W)

EP-3620 TIMING

EP-3238 CINE MEMO (COLOR)

EP-2213 VEL MEMORY

EP-2213-1 VAR MEMORY

EP-3115 COLOR LINE BUFF

EP-3477 US INT

EP-2841 ECG MEMORY

EP-3467 MOTHER BOARD J216 J239 J224 J228 J227-2 J227-1 J233 J234 J235 J227-3 J228-1 J226-1 J230 J231-1 J232 J235 J237 J238-2 J236 J220 J222 J223 J200 P224 P228 P227-2 P220-1 P233 P234 P235 J246 J241 CBL206 CBL212 CBL204 CBL210 CBL521 CBL213 CBL211 CBL208 CBL209 CBL202 CBL203 CBL207 CBL201 CBL205

UIM-326

J299 P299 J298 P298 J289 P289 J296 P296 J710 P710

EP-3179 1A (IN) 1B (OUT)

NEGA J285 P285 POSI J286 P286 J244 P244 J280 P280 J281 P281 (COLO) (B/W) J283 P283 (OUT) J284 P284 (IN)

P377 (K/e)

P911 CBL53 J262 P247

RS232C

SSZ-203

R G B

B/W VIDEO

FOOT SWITCH

SVHS

MULTI FORMAT CAMERA

EXIT VIDEO

VTR VIDEO

J911-1 IP-1230 (OP)

VTR AUDIO

PSU-6808 J516 J518 J513 J511 J512 J510 J519 J514 J500 J504 P516 P518 P513 P511 P512 P510 P519 P514 P504

CBL4 CBL18 (M/b) PWR1 (H/O) PWR2 (E/w) PWR3

CBL7 PWR7 (HR)

CBL53 PWR4 (Lh)

CBL5 J321

POWER SW (S300)

B300 B301 B302

REVISIONS

Aloka

TITLE SSD-680 STD CABLE CONNECTION

MODEL PSC-120

1/4

3RD ANGLE PROJECTION

SCALE

UNIT mm

DRAWN 92.10.20

DESIGNED 92.10.20

CHECKED

APPD

DRAWING NO. MC 3271 9

7-128

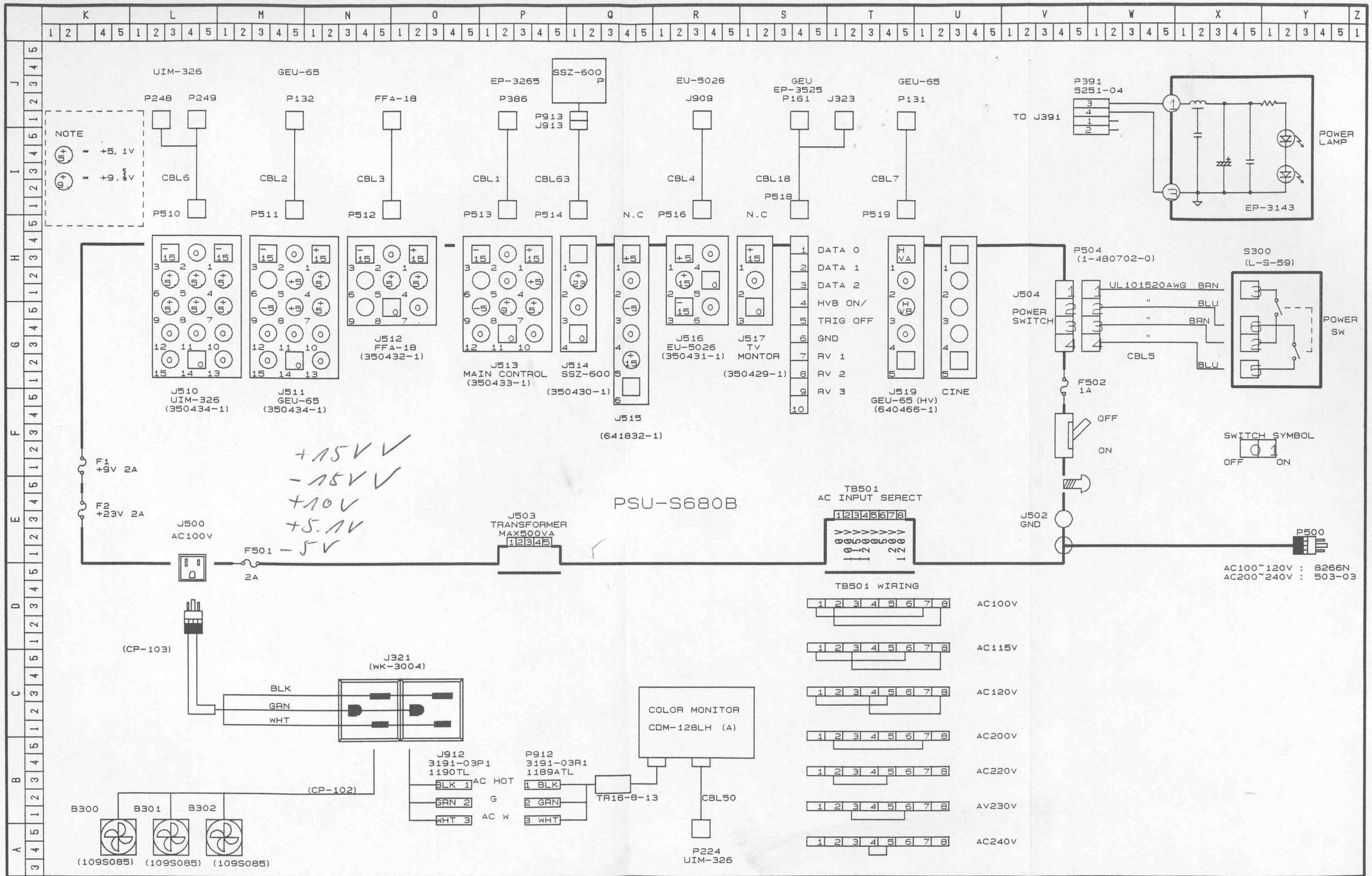


REVISIONS

7-129

| | | | | |
|---|---|---|---|---|
| Aloka | TITLE SSD-680STD CABLE CONNECTION | | MODEL PSC-120 | 2/4 |
| 3RD ANGLE PROJECTION | DRAWN | DESIGNED | CHECKED | APPD |
| SCALE | 上工按 '92.10.20 関東 | 上工按 '92.10.20 関東 | 企画G '92.10.21 近藤 | |
| UNITS mm | | | | DRAWING NO. MC 327150 |

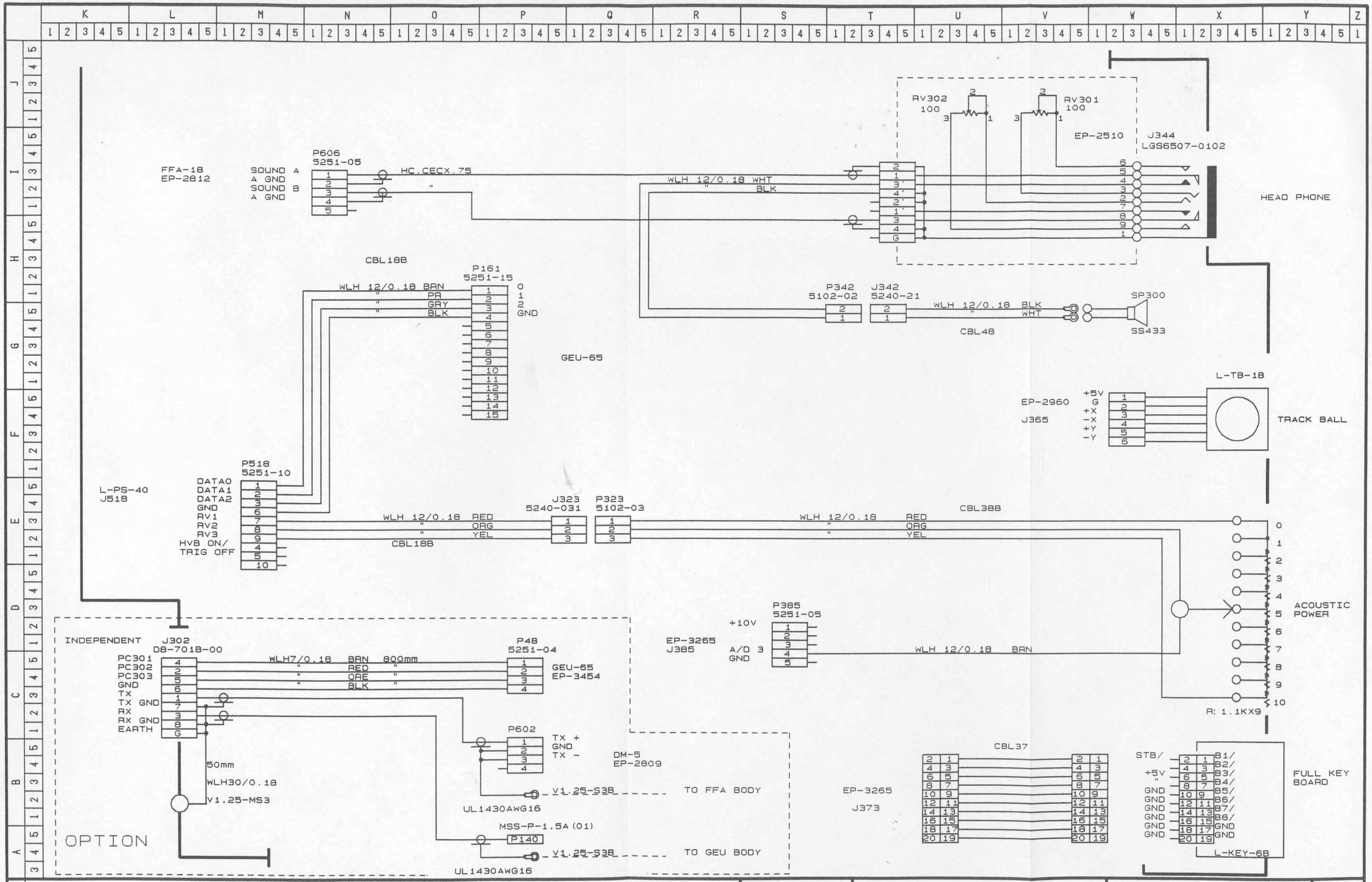


REVISIONS

| | | | | | |
|---|---|---|---|---|---|
| Aloka | TITLE SSD-680 STD<br>CABLE CONNECTION | | | MODEL<br>PSC-120 | 3/4 |
| 3RD ANGLE PROJECTION | DRAWN | DESIGNED | CHECKED | APPD | DRAWING NO. |
| SCALE | 上工検 92.10.20 関東 | 上工検 92.10.20 関東 | 企画G 92.10.21 近藤 | 上技 92.10.22 八江 | MC 327151 |
| UNITS mm | | | | | |

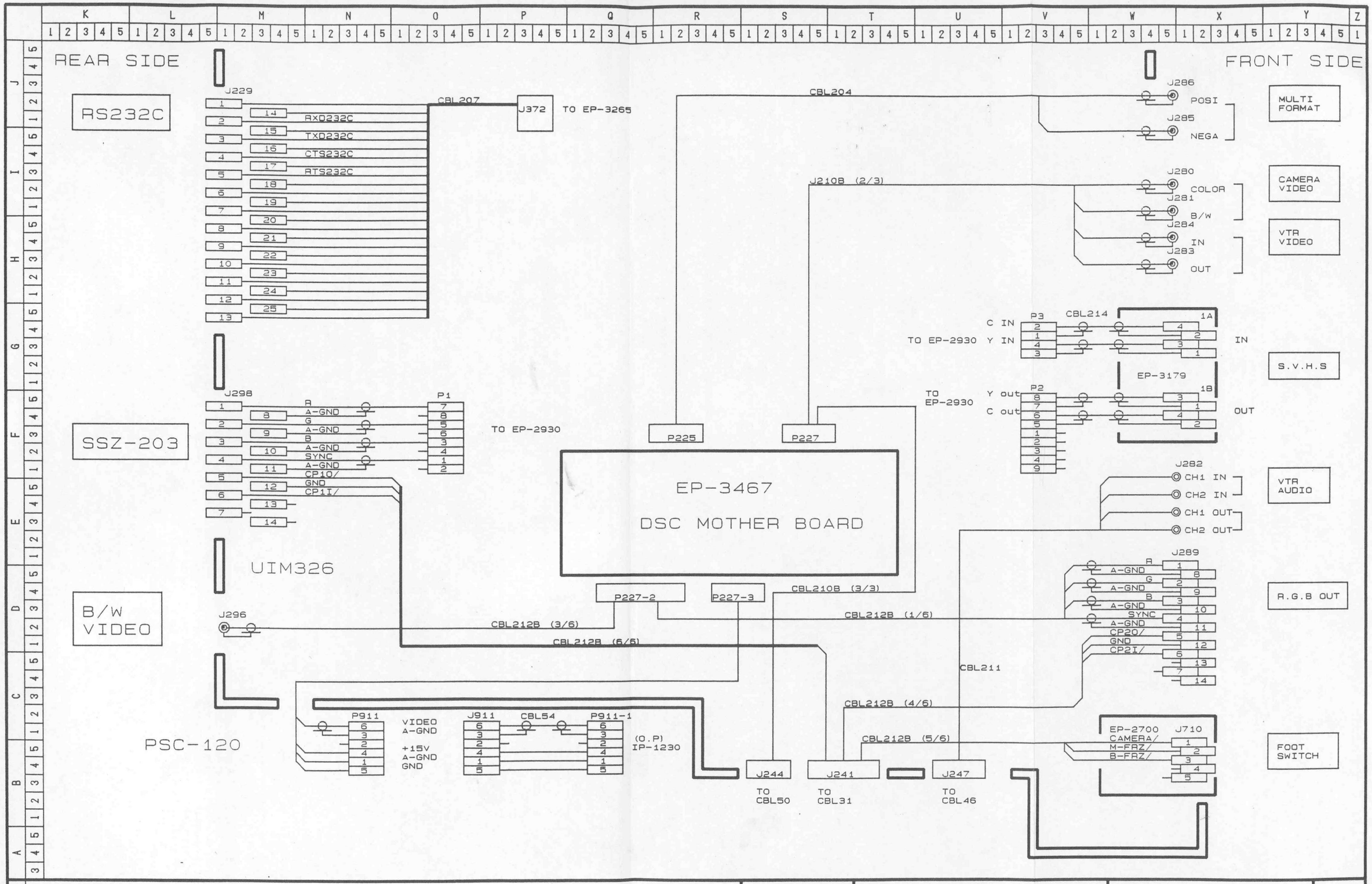


REVISIONS

| | | | | | |
|---|---|---|---|---|---|
| Aloka | TITLE SSD-680STD CABLE CONNECTION | | | MODEL PSC-120 | 4/4 |
| 3RD ANGLE PROJECTION | DRAWN | DESIGNED | CHECKED | APPD | DRAWING NO. |
| SCALE | 上工検 92.10.20 関泉 | 上工検 92.10.20 関泉 | 企画G '92.10.21 近藤 | 上工検 '92.10.22 入江 | MC 327152 |
| UNITS mm | | | | | |

7-131

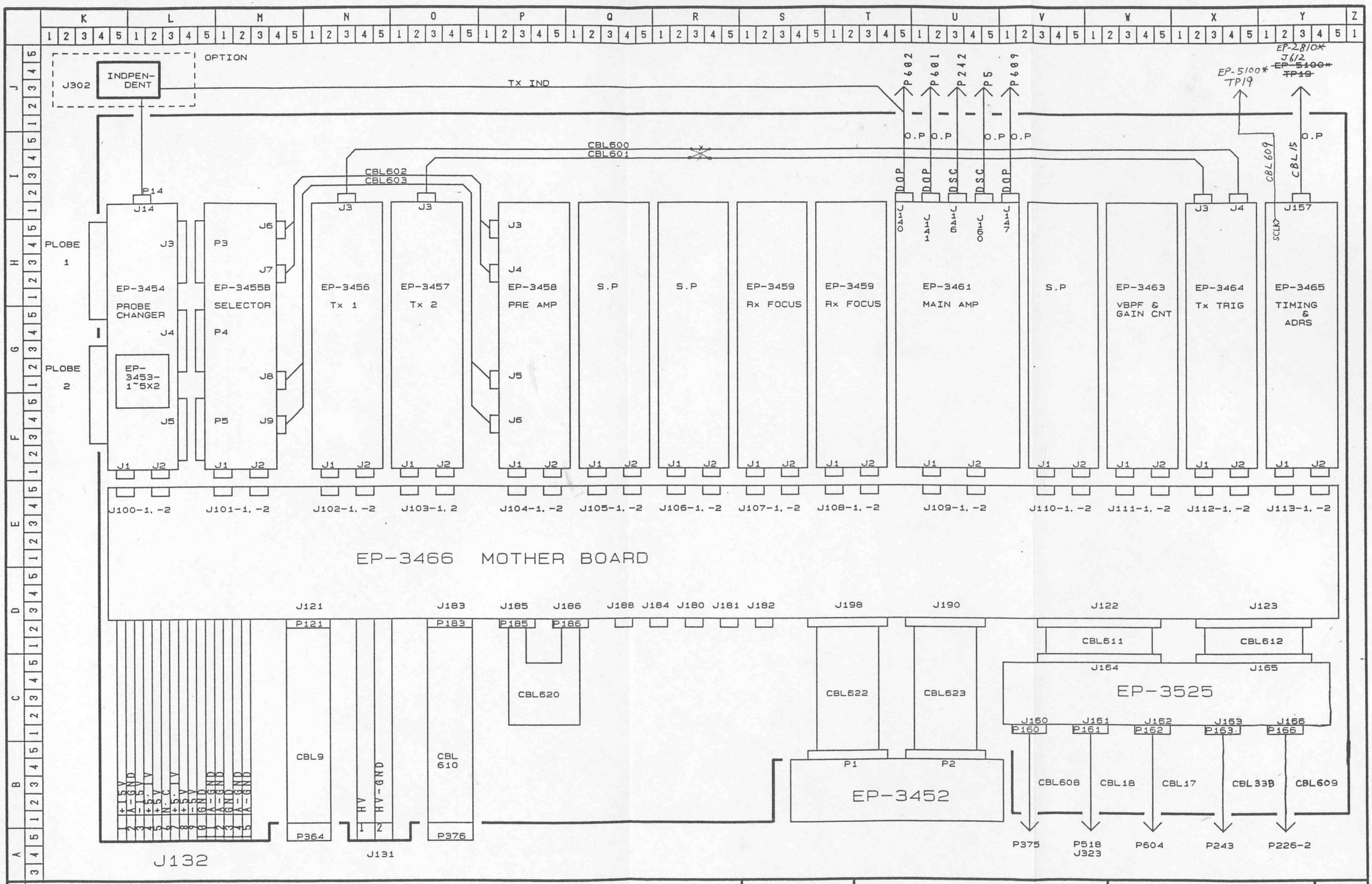


REVISIONS

| | | | | | |
|---|---|---|---|---|---|
| Aloka | TITLE Tx Rx UNIT | | | MODEL GEU-65 | 1/1 |
| 3RD ANGLE PROJECTION | DRAWN | DESIGNED | CHECKED | APPD | DRAWING NO. |
| SCALE | 上工検 '92.11.05 関泉 | 上工検 '92.11.05 関泉 | 企画G '92.11.06 近藤 | 1枚 '92.11.07 入江 | MC 326891 |
| UNITS mm | | | | | |

7-132

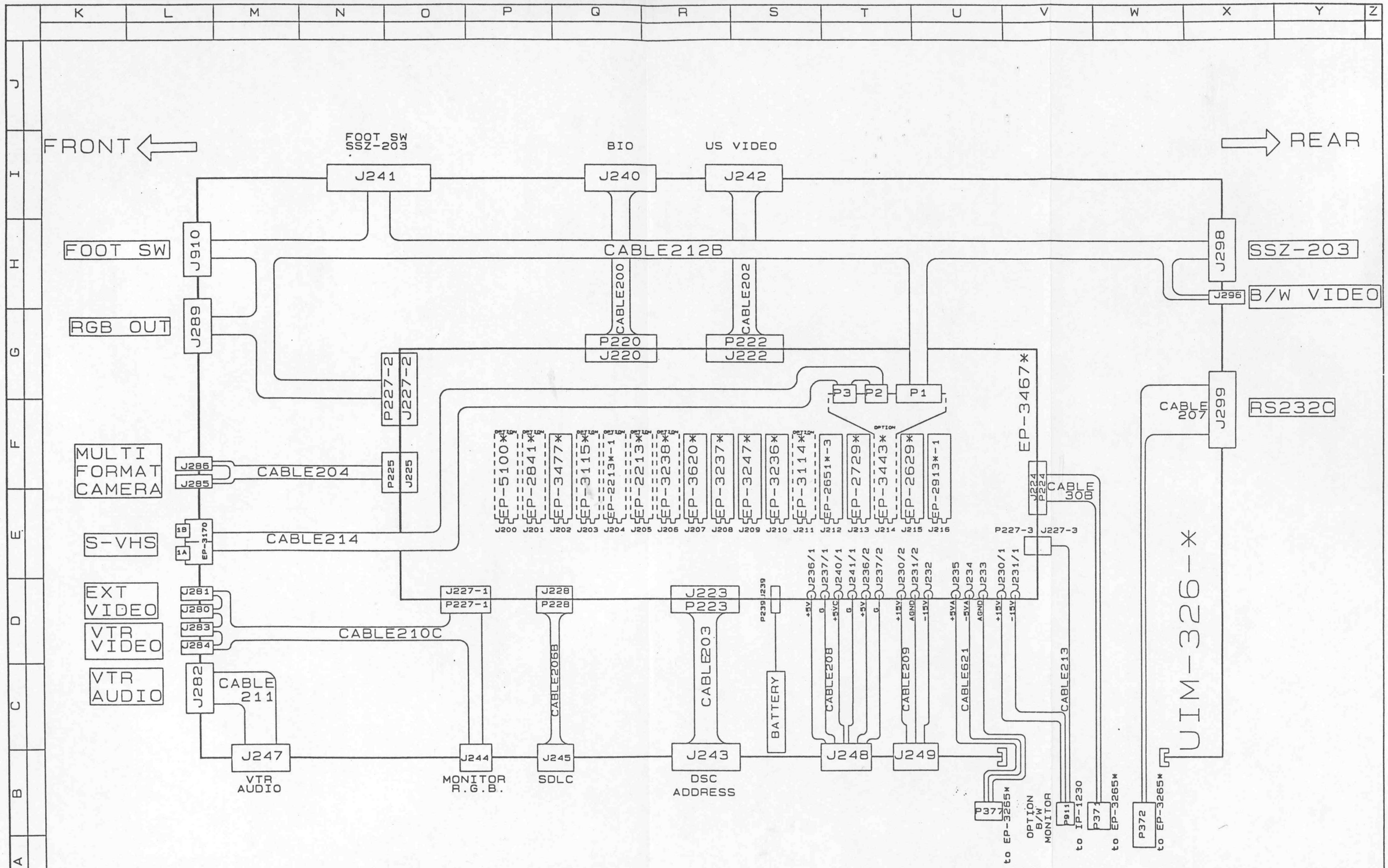


| | | | | |
|---|---|---|---|---|
| REVISIONS変更 | Aloka | TITLE名称 SSD-680STD DSC UNIT SCHEMATIC DIAGRAM | MODEL形名 UIM-326 | 1/1 |
| | 3RD ANGLE PROJECTION 第3角法 | DRAWN製図 村田 92.10.14 | DESIGNED設計 92.10.14 | CHECKED検図 92.10.14 | APPD承認 92.10.31 | DRAWING NO.図番 MC326721 |
| | SCALE尺度 / UNIT単位 mm | | | | | |

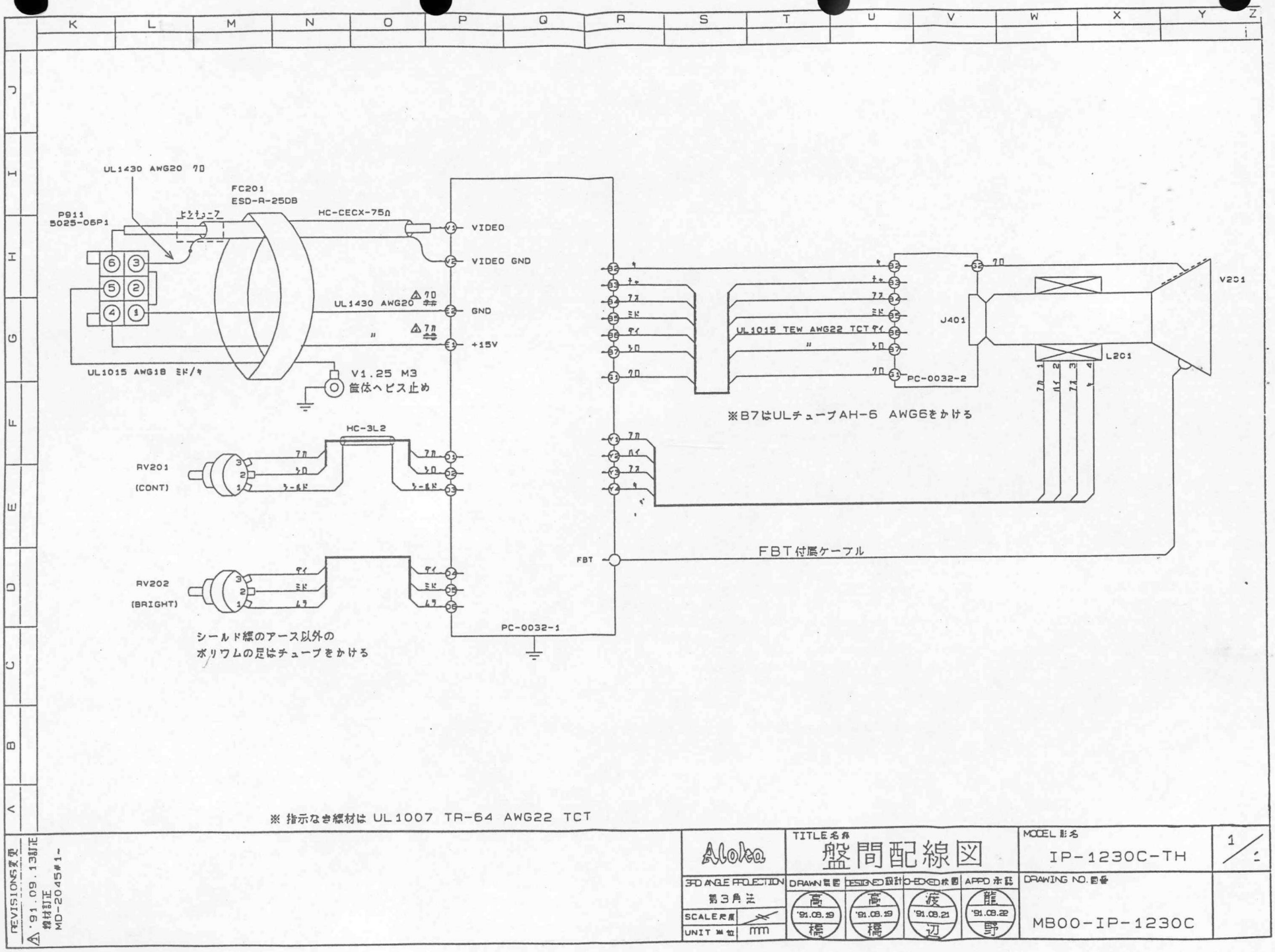
UL1430 AWG20 ｱｶ
FC201
ESD-R-25DB
P911
5025-06P1
ヒシチューブ
HC-CECX-75Ω
VIDEO
VIDEO GND
UL1430 AWG20 ｱｶ
GND
+15V
UL1015 AWG18 ミド/キ
V1.25 M3
筐体へビス止め
HC-3L2
RV201
(CONT)
RV202
(BRIGHT)
シールド線のアース以外の
ボリウムの足はチューブをかける
PC-0032-1
FBT
FBT付属ケーブル
UL1015 TEW AWG22 TCT
PC-0032-2
J401
L201
V201
※B7はULチューブAH-6 AWG6をかける
※ 指示なき線材は UL1007 TR-64 AWG22 TCT
REVISIONS変更
'91.09.13訂正
線材訂正
MD-2045#1~
Aloka
3RD ANGLE PROJECTION
第3角法
SCALE尺度
UNIT単位
mm
TITLE名称
盤間配線図
DRAWN 製図
DESIGNED 設計
CHECKED 検図
APPD 承認
高 '91.08.19 橋
高 '91.08.19 橋
渡 '91.08.21 辺
龍 '91.08.22 野
MODEL 形名
IP-1230C-TH
DRAWING NO. 図番
MB00-IP-1230C
1/1

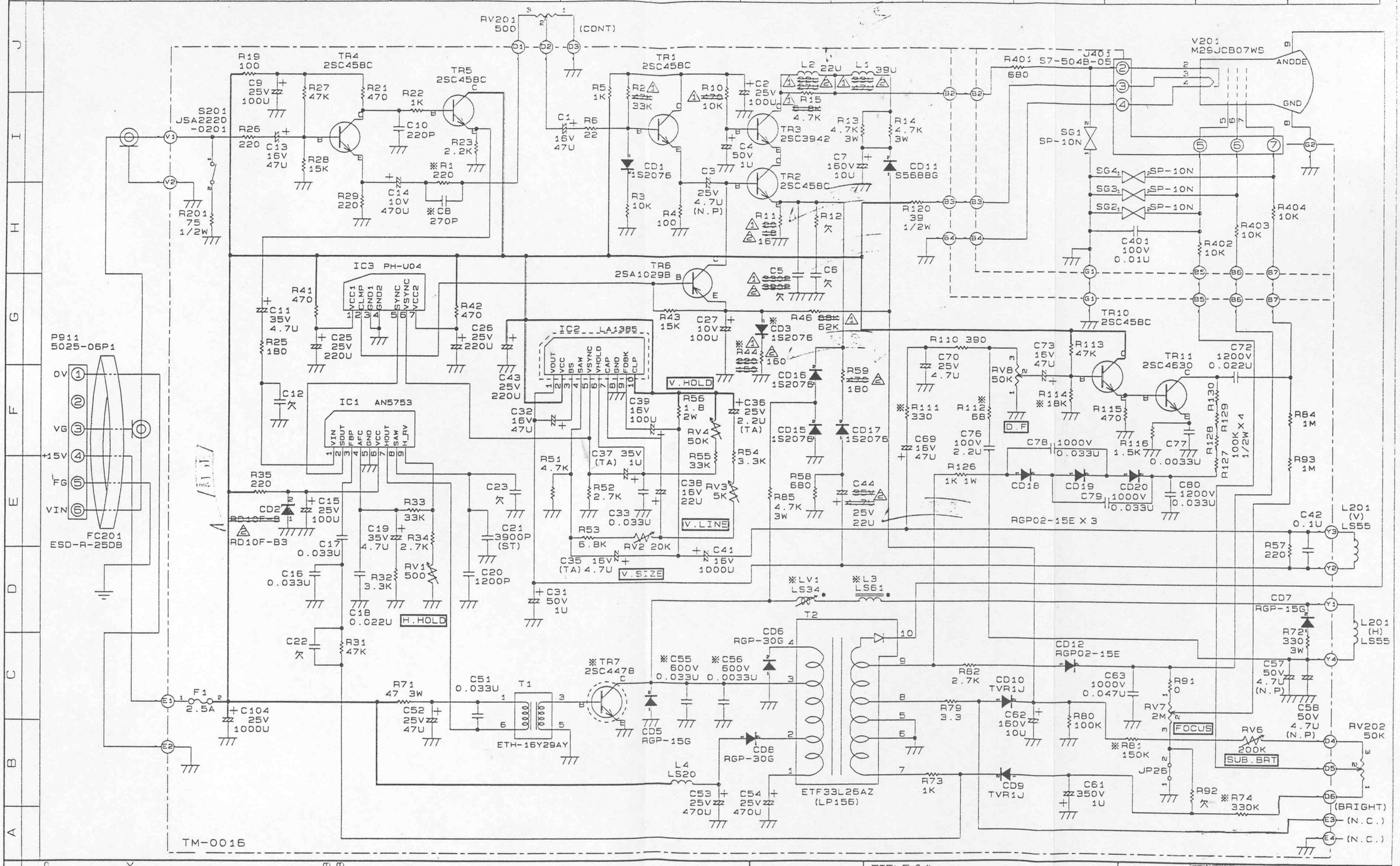


REVISIONS変更

△'92.06.12変更
C5 330P→390P
L1 33U→47U
L2 22U→27U
R2 47K→33K
R10 470→10K
R11 20→18
R15 6.8K→4.7K
R44 220→150
R46 68K→62K
MM-4838#1~
(MW-22567)

△'92.07.30変更
C5 390P→欠
C44 4.7u/35V
→22u/25V
L1 47U→39U
L2 27U→22U
R11 18→16
R44 150→160
R59 470→180
CD2記正 RD10F-B
→RD10F-B3
MM-4889#1~
(MW-23026)

7-135

Aloka

| | |
|---|---|
| TITLE名称 | 12" TV MONITOR |
| MODEL形名 | IP-1230C-TH |
| 1/1 | |
| 3RD ANGLE PROJECTION 第3角法 | |
| SCALE尺度 | ※ |
| UNIT単位 | mm |
| DRAWN製図 | 高 '92.03.25 橋 |
| DESIGNED設計 | 高 '92.03.25 橋 |
| CHECKED検図 | 渡 '92.03.25 辺 |
| APPD承認 | 龍 '92.03.25 野 |
| DRAWING NO.図番 | MD00-TM-0016 |

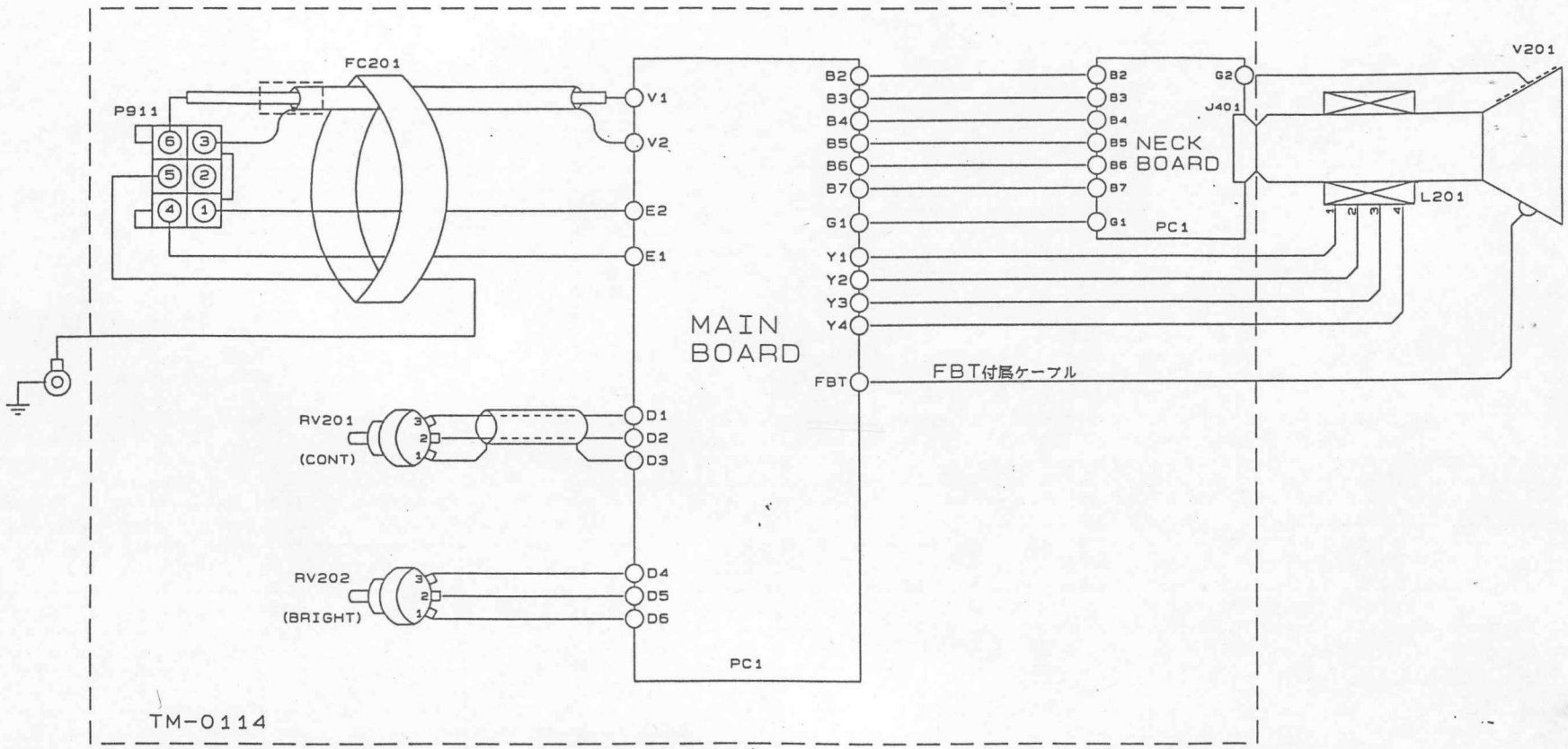


・本回路図は基本回路図ですので改良などにより，セットと異なる事があります。

| | | | | |
|---|---|---|---|---|
| REVISIONS変更 | Aloka | TITLE名称 CABLE CONNECTION | MODEL形名 IP-1230CV-TH | 1/1 |
| | 3RD ANGLE PROJECTION 第3角法 | DRAWN製図 高橋 '92.07.23 | DESIGNED設計 高橋 '92.07.23 | CHECKED検図 渡辺 92.7.24 |
| | SCALE尺度 | APPD承認 高橋 92.7.27 | DRAWING NO.図番 MD00-IP-1230CV | |
| | UNIT単位 mm | | | |

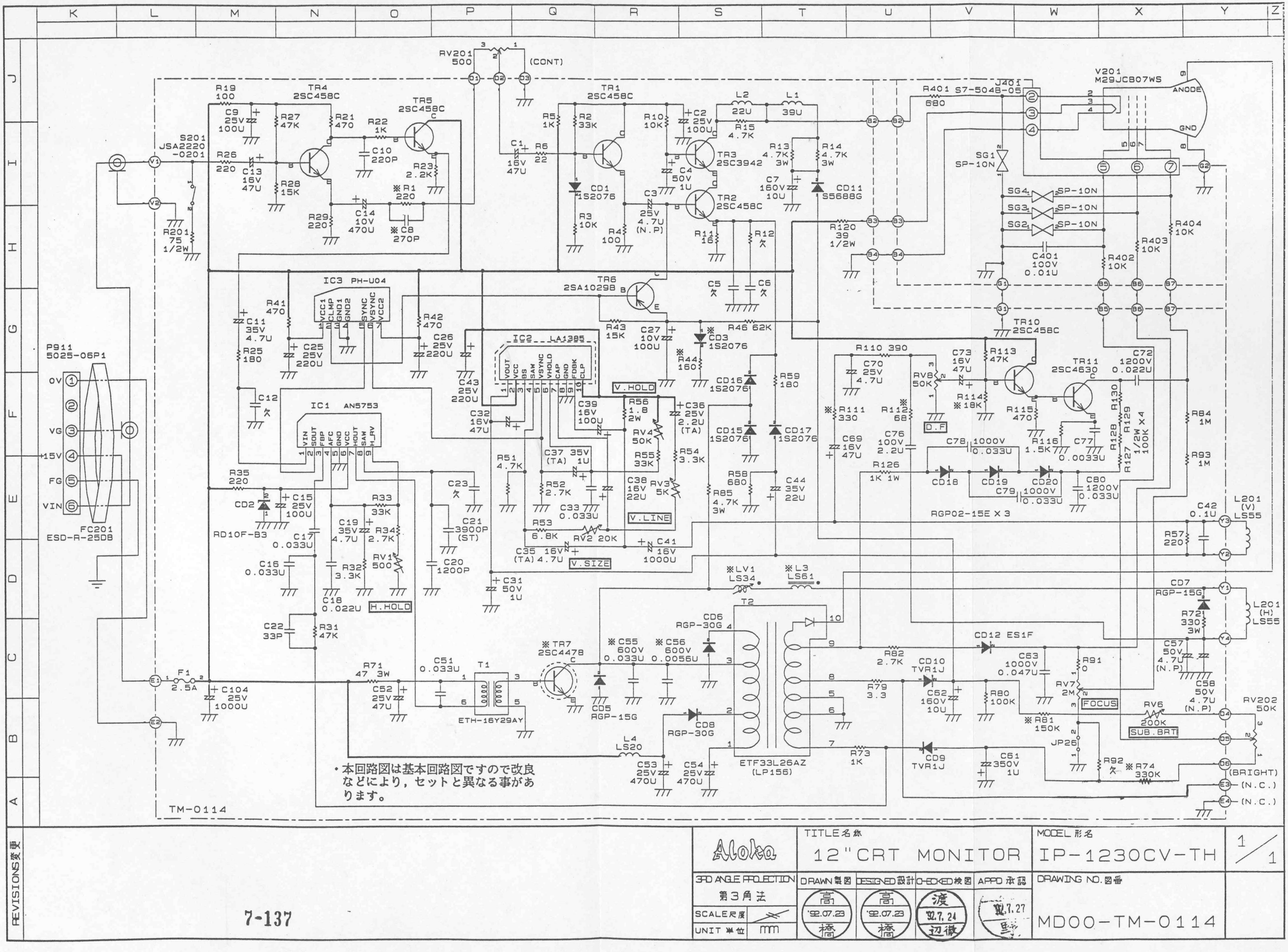


REVISIONS変更

7-137

| | | | |
|---|---|---|---|
| Aloka | TITLE名称 12"CRT MONITOR | MODEL形名 IP-1230CV-TH | 1/1 |
| 3RD ANGLE PROJECTION 第3角法 | DRAWN製図 高 '92.07.23 | DESIGNED設計 高 '92.07.23 | CHECKED検図 渡 92.7.24 辺徹 |
| SCALE尺度 | APPD承認 92.7.27 | DRAWING NO.図番 MD00-TM-0114 | |
| UNIT単位 mm | | | |

## 8-1 Introduction

This trouble shooting makes integral part of the Service Manual. And it has been prepared for the persistent purpose of providing for repairing guidelines.

What has been described herein, moreover, is subject to the prerequisite for a repair to be made by replacing a PCB.

## 8-2 Precautions

To prevent a new problem (secondary disaster) from taking place in the process of trouble shooting as described herein, every engineer concerned should duly take the following precautions:

(1) Never remove any part from the electric system, including PCB, probe, cable, etc., before powering off the equipment.

(2) Do not proceed to a disassembly of equipment without observing the established disassembly procedure. Be careful enough for wrongly disassembling the equipment would damage or break it down.

(3) To make certain of a voltage and/or a signal waveform, it is necessary to thoroughly know the specification and handling procedure relating to a measuring instrument employed.

(4) To ground a measuring instrument probe or the like, it is naturally necessary to know where a signal to determine is grounded. Before using the instrument, moreover, make certain for which the grounding terminal is intended, analog, digital, alternating current, direct current, high voltage or low voltage.

> ●Caution● Failure to ground properly might result in an incapability of observing an accurate voltage or waveform or in a probability of burning out the measuring instrument or ultrasound diagnostic equipment or both.

(5) Do not fit a measuring instrument probe or the like to a measuring point before turning off the ultrasound diagnostic equipment.

●Caution● To determine an especially high voltage, it might rupture a circuit in the ultrasound diagnostic equipment. Besides, it might endanger a engineer or engineers concerned.

(6) To replace or repair a PCB, make certain of its compatibility, etc, in accordance with the "History of SSD-2000".
If a wrong ROM should be mounted on a PCB, employ the ROM originally employed in the user's equipment or select an appropriate one in accordance with the History.

●Caution● If an incompatible PCB should be inserted into the equipment, there are possibilities that the equipment may be burnt out. If such incompatible PCB should remain inserted in the equipment after completion of a repair, moreover, it should be fully noted that another problem may take place newly.

(7) Without definitively knowing that failure has taken place, do not unnecessarily change any controls and/or switches on a PCB from their original settings.
To determine whether or not a problem is the failure, see Section 10 "Performance Check."
If a readjustment is required, see Section 9 "Alignment Procedure."

●Caution● An unnecessary change of controls' or switches' settings might bring about a new problem, probably making the equipment unrepairable.

(8) While you are shooting trouble in accordance with the present procedure, it may be necessary to consult with Technical Support. In such a case, provide at least the following information:

i) Equipment model number,
ii) Equipment serial number,
iii) History of equipment (repairs and/or modifications so far made), and software version, and
iv) Specific problem situations (Send a photo or photos.)

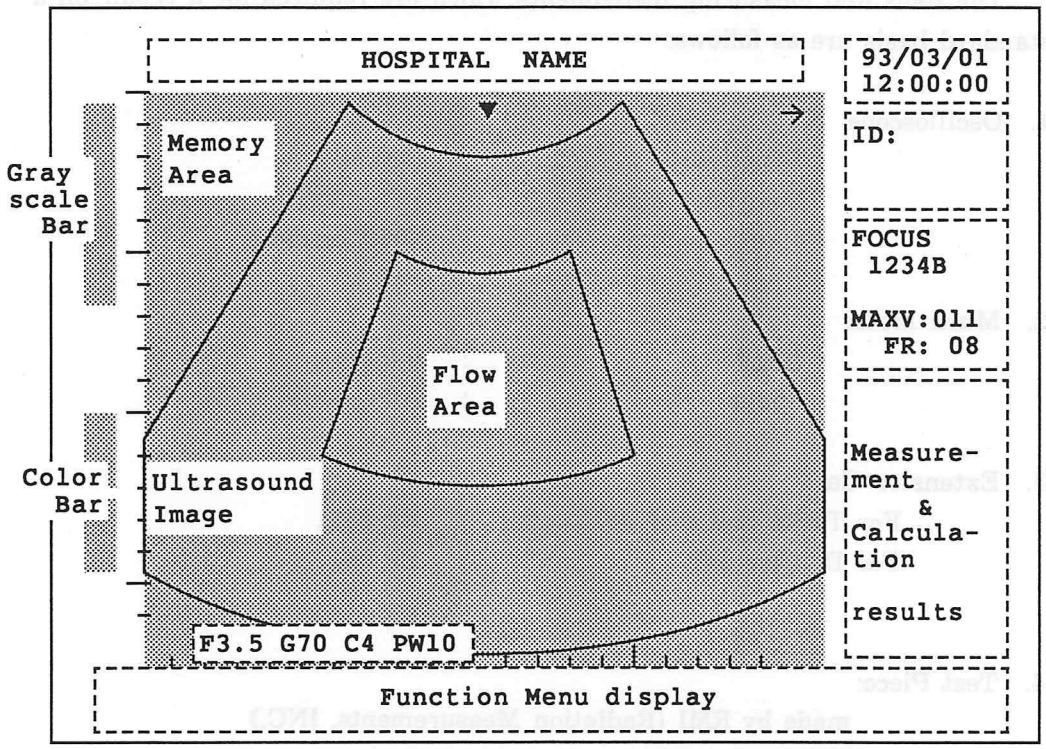


To give an explanation about the situations of a problem, it is necessary to clarify to which it relates out of the elements composing the scene, while referring to the illustration given above. Related component elements may be roughly classified as follows:

- Ultrasound Image : An ultrasound tomographic image; its contour varies with an image mode, a probe, etc.
- Memory Area : A full size of memory required to display an ultrasound image
- Gray Scale Bar : An indicator of image gradients; its pattern varies with a setting of enhancement, gamma or the like
- Character : A component of the text relating to a hospital name, ID, automatic display, etc.
- Graphic : A component of scale marks, active marks, body marks, etc.
- Flow Area : Color image display area.
- Color Bar : It shows the color coding corresponded to velocity and variance information.

## 8-3 Tools and Measuring Instruments Required

The tools and measuring instruments which are required for a repair on a standard basis are as follows:

1. Oscilloscope

| | | |
|---|---|---|
| Sensitivity | : | 5mV/div. |
| Frequency band | : | DC~50MHz |
| Maximum input voltage | : | 400V or more |

2. Multi Meter

| | | |
|---|---|---|
| Class | : | 0.5 class |
| Range | : | ACV, DCV, DCA, Ω |

3. Extension Card

| | | |
|---|---|---|
| For Tx/Rx unit and DSC unit | : | EP-2351 |
| For Doppler unit | : | EP-0847-2 |

4. Test Piece:
   made by RMI (Radiation Measurements, INC.)
   RMI-412

5. Probe
   Convex : UST-959-3.5 (Standard probe)

6. ECG (EKG) Simulator
   (Only when optional ECG signal display unit PEU-680B is connected.)
   EKG-101 (made by Fukuda Electronics)

## 8-4 (this clause have been deleted on Version 3.)

( this is free page. )

## 8-5 Information

A variety of functions are to be set in a micro processing unit (MPU). Some settings may be externally entered by the user while others cannot be established by anyone other than an authorized service personnel. Various settings and their changing methods are described herein so that the user may not mistake a performance-associated problem for failure while making a repair.

### 8-5-1 Automatically Setting after Powering On

At the same time when the system is powered on, the CPU enters into the INITIAL SET mode. To prepare and display an image by sending an ultrasound from that mode, the system executes the following steps from an appearance point of view:

Blow fan starts running.
↓
Light emitting diodes (LEDs) on the operation panel come on.
↓
Characters and graphics are displayed on the monitor CRT.
An ultrasound image is displayed.

### 8-5-2 Setting Switches on the PCB

The PCB is provided with the switches to initialize the equipment and to make it applicable to a diversity of specifications. Unless any of the switches is set as specified, the equipment will not only malfunction but also may invite a new problem. Should any of the settings have been inevitably changed, carry out setting the switches all over again with reference to the next page.

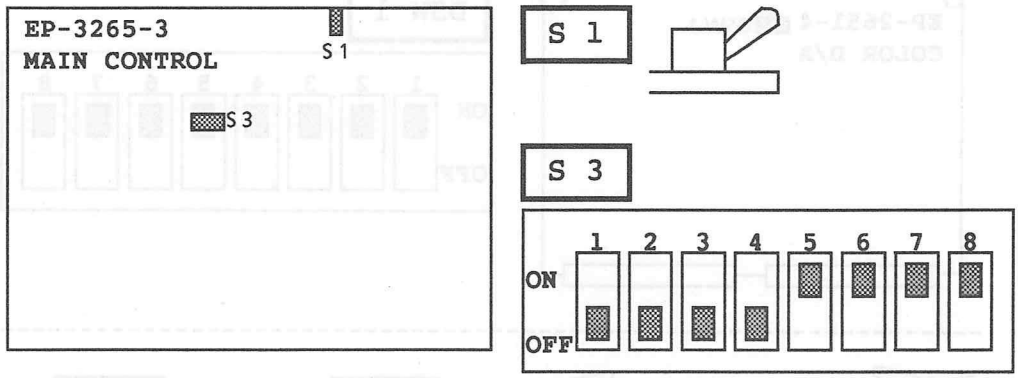
EP-3265-3
MAIN CONTROL
S 1
S 3
S 1
S 3
1 2 3 4 5 6 7 8
ON
OFF

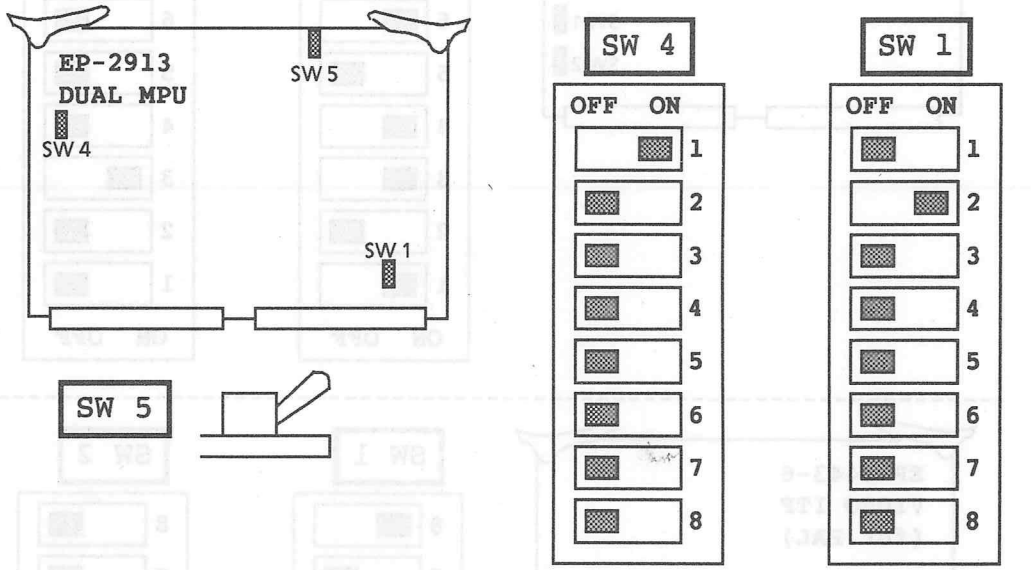
EP-2913
DUAL MPU
SW 4
SW 5
SW 1
SW 5
SW 4
OFF ON
1 2 3 4 5 6 7 8
SW 1
OFF ON
1 2 3 4 5 6 7 8

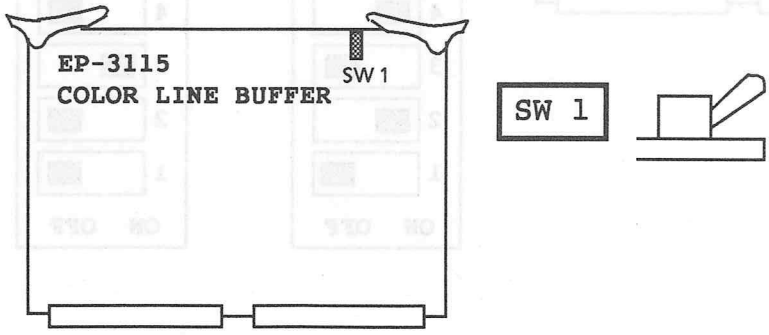
EP-3115
COLOR LINE BUFFER
SW 1
SW 1

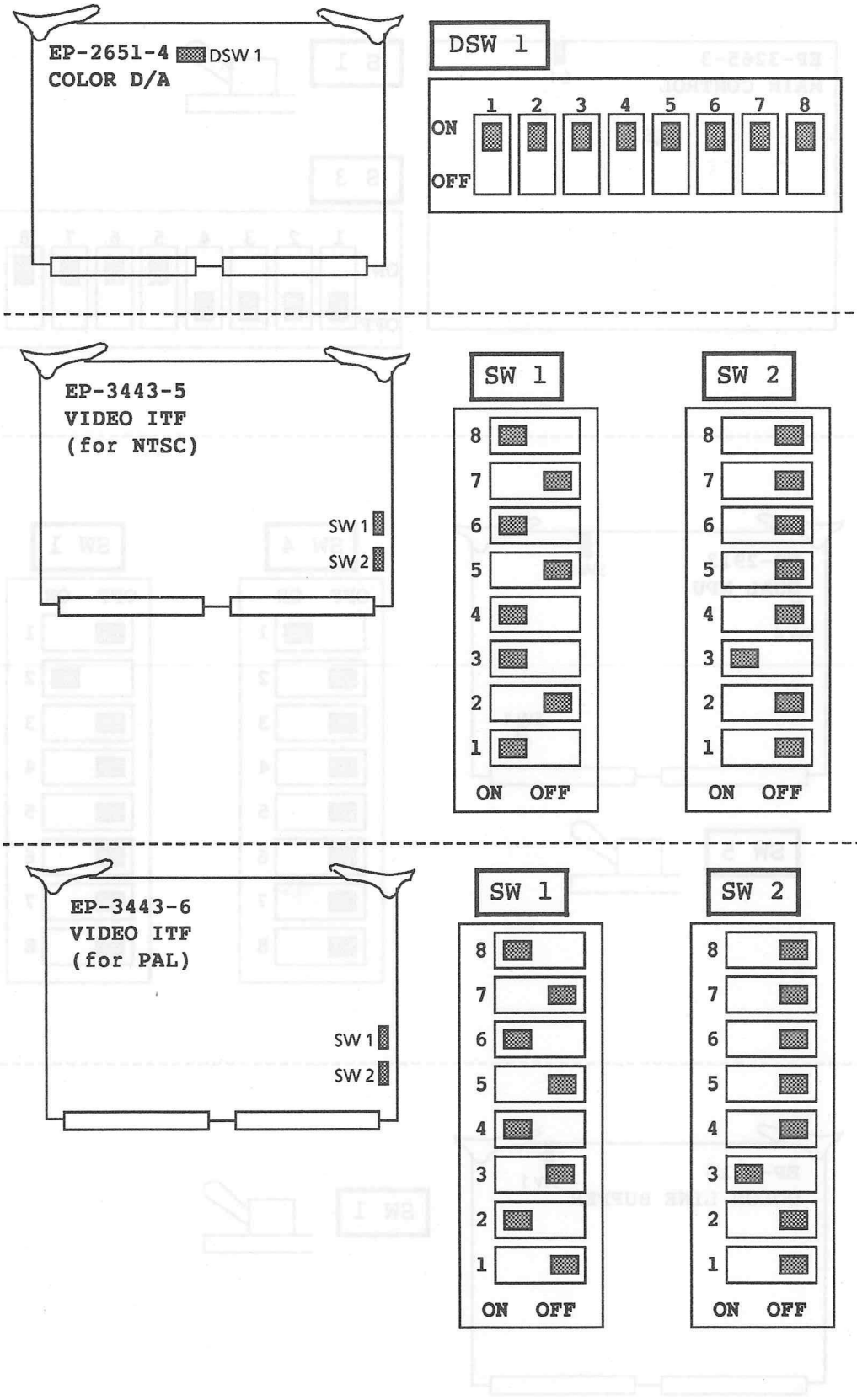
EP-2651-4 DSW 1
COLOR D/A
DSW 1
1 2 3 4 5 6 7 8
ON
OFF
EP-3443-5
VIDEO ITF
(for NTSC)
SW 1
SW 2
SW 1
SW 2
8 7 6 5 4 3 2 1
ON OFF
EP-3443-6
VIDEO ITF
(for PAL)
SW 1
SW 2
SW 1
SW 2
8 7 6 5 4 3 2 1
ON OFF

## 8-5-3 Usage of the Functions to be Set by the User

Those functions which the user may set as enumerated below are stored in internal memory (random access memory : RAM) as backed up with a battery. In normal use, the memory data so backed up will never disappear. Nevertheless, there are possibilities that the information in memory may be erased as a result of repairing and/or modification. Whenever such repairing or modification may be expected, it is necessary to write down the backup information in the form of a memorandum and to set it all over again after completion of such repair or modification.

How to set each backup function is described below for your reference. For details relating to the method, see the operation manual attached to the equipment.

| |
|---|
| ○Reference○ The batteries are mounted on MAIN CONTROL board EP-3265 and the chassis of DSC unit UIM-325. |

① How to set a hospital name:

1 Press the **MENU** switch.
2 Press the **Next** three times to shift the page. Then, select the **HOSP**.
3 Enter a hospital name through the keyboard.
4 Press a function switch covering the **Set** feature.

② How to set a date and time:

1 Press the **MENU** switch.
2 Press the **Next** three times to shift the page. Then, select the **DATE**.
3 To set a time, select the **TIME**. To set a date, select the **DATE**.
4 Enter a correct time or date through the keyboard.
5 Press a function switch covering the **Set** feature.
Selecting the **FORMAT** will allow you to alter the form in which a date is displayed.

③ How to preset:

1 Press the **PRESET** switch.
2 Select Preset number to be set, by function switch.
3 Press a function switch covering the **MODIFI** feature.
4 Select item to be set (MODE / IMAGE / PW / FLOW / MEAS / OB_PROG / ANNOTAT), by function switch.
Text is displayed on the screen.
5 Change the setting by the trackball and function switches.
(Refer to Operator's Manual for details.)

## 8-5-4 Resetting the Backup Memory (RAM):

A backup feature is available to normally store the user's settings. In normal use, it will not be necessary to erase all the information so stored. It is necessary, however, to reset the backup memory in any of the following events:

●Caution●

(1) "How to reset back up RAM" discribed in the next page is the method to shorten directry between the pin for voltage supply and GND pin of RAM IC.
There is the other method that erase the contents in PRESET by software from panel operation . Refer to Section 3 for details.

(2) Resetting the backup memory will erase presettings, hospital name and so on.
To set them all over again after resetting the memory, it is necessary to record the set information by the use of a printer, such as "Echo Copier" or the like, or to copy the set information in the "Preset Record Sheet" described in 8-5-9.
Do not use the customer's printer, meanwhile, before obtaining consent to do so.

1) When the software has been altered for an upgrade or for any other reason.
→ Reset the backup RAM by software referring Section 3.

2) When an unnecessary (abnormal) character or characters or code or codes is displayed in the data which have been set by the user.
→ Reset the backup RAM by software referring Section 3.
When the reset by software is not effective, reset the backup RAMs according to the next page.

3) When the system fails to start up even if the equipment is powered on.
→ Reset the backup RAMs according to the next page.
Under such a circumstance, resetting the backup memory is a mere provisional action consistently. To make a substantial repair, refer to 8-5-7. In such a situation, moreover, it is impossible to store the set information, such as presettings, etc.

How to reset back up RAM

1. RAM on EP-3265 MAIN CONTROL board

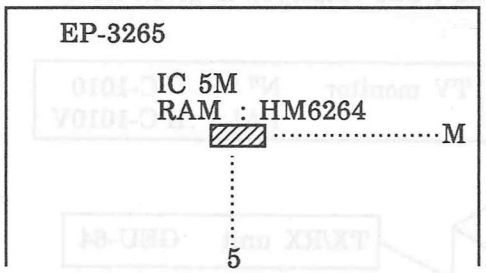


Erase the data of backupped RAM according to followings.
(1) Turn the power switch off.
(2) Open the operation panel.
(referring "Disassembling Procedure)
(3) Shorten between 14 pin and 28 pin of IC5M for a few seconds.
(4) Close the operation panel.

2. RAM on EP-2629 AGD board

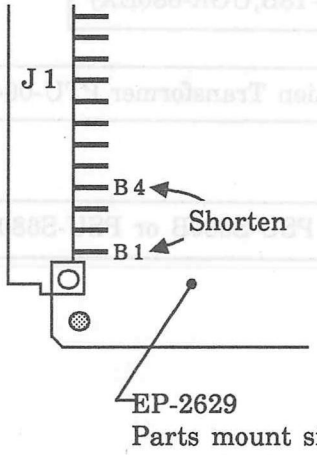


Erase the data of backupped RAM according to followings.
(1) Turn the power switch off.
(2) Open the rear cover of main body.
(3) Remove the cover of UIM-325.
(4) Release EP-2629 from PCB lack.
(5) Shorten between B1 pin and B4 pin of J1 on EP-2629 for a few seconds.
(Date and Time data is erased.)
(6) Get back EP-2629 to UIM-325.
(7) Assemble the cover of UIM-325.
(8) Assemble the rear cover of main body.

3. RAM on EP-2913 DUAL MPU board

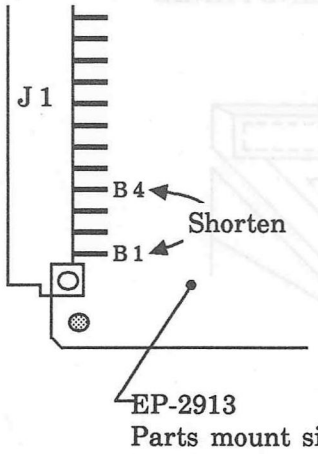


Erase the data of backupped RAM according to followings.
(1) Turn the power switch off.
(2) Open the rear cover of main body.
(3) Remove the cover of UIM-325.
(4) Release EP-2913 from PCB lack.
(5) Shorten between B1 pin and B4 pin of J1 on EP-2913 for a few seconds.
(Date and Time data is erased.)
(6) Get back EP-2629 to UIM-325.
(7) Assemble the cover of UIM-325.
(8) Assemble the rear cover of main body.

## 8-5-5 PCB Arrangement

An arrangement of all the units and PCBs employed is given on the followings.

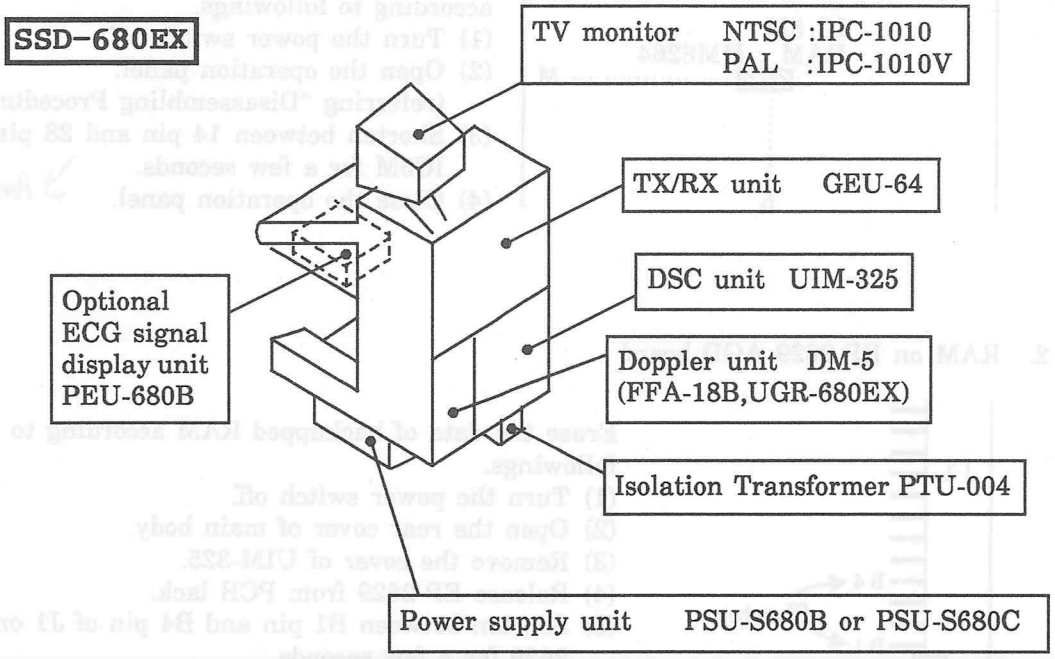


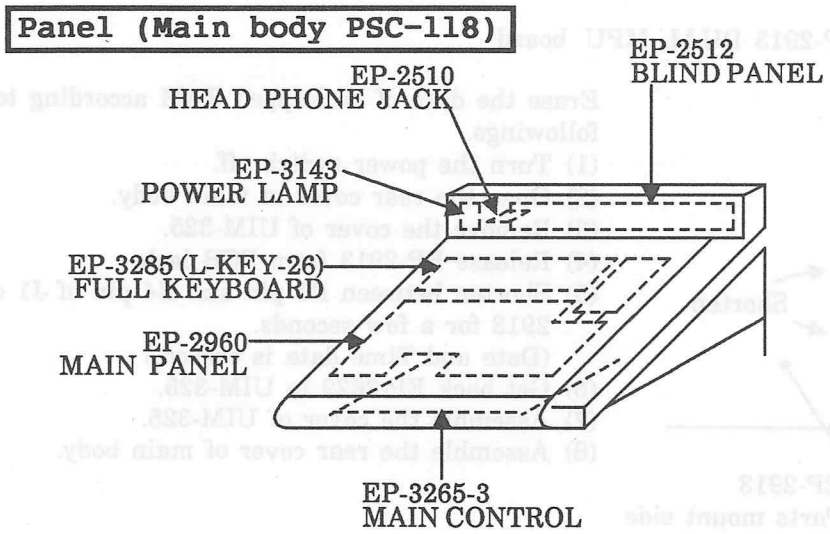

**TX/RX unit GEU-64**

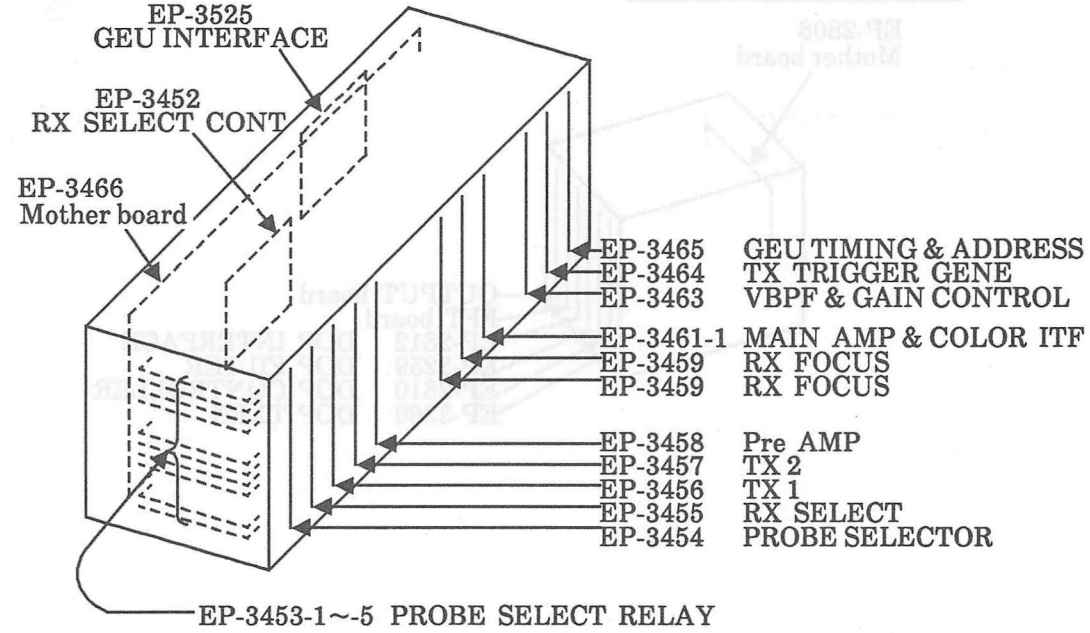


**DSC unit UIM-325**

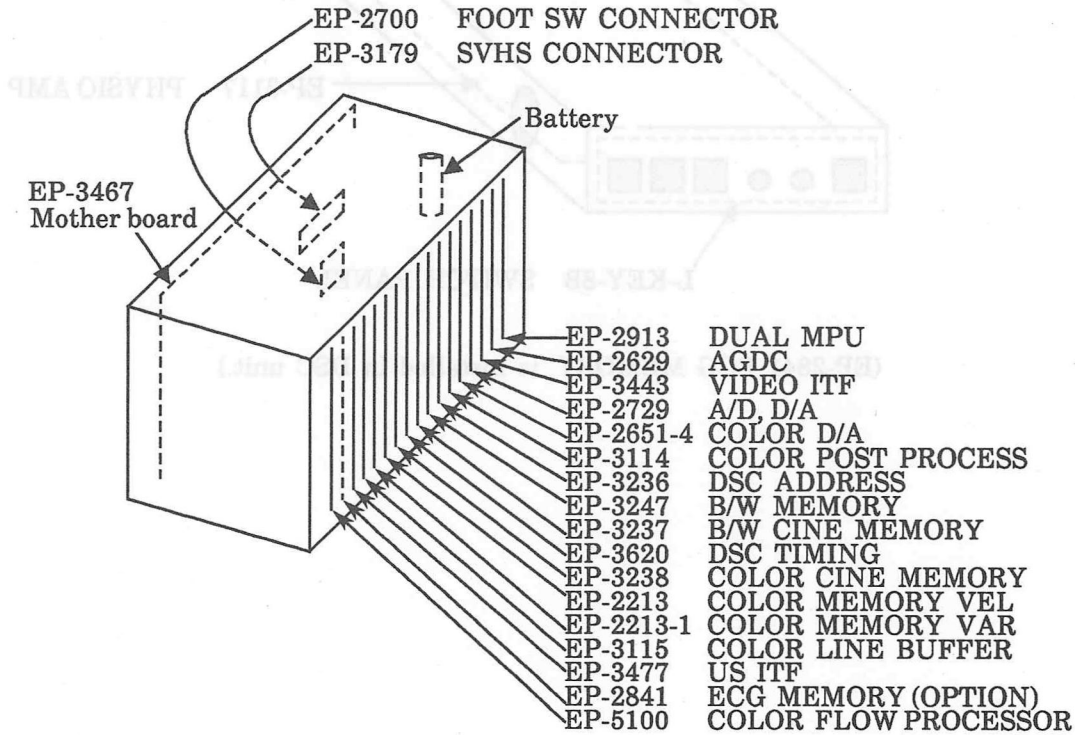

**Doppler unit DM-5**

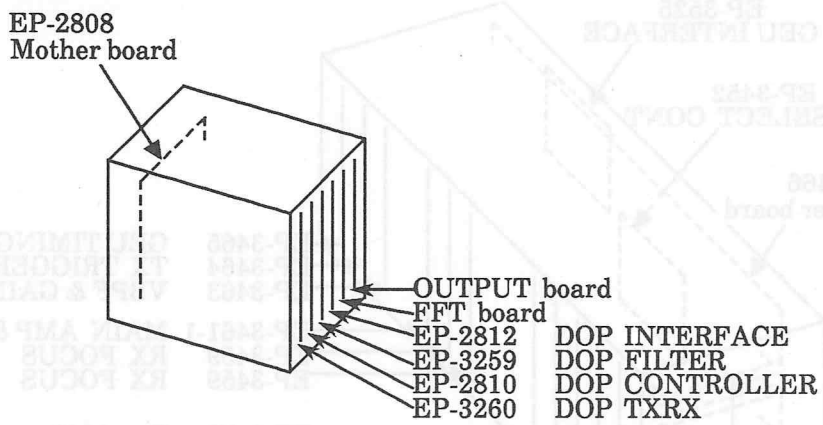


**Optional ECG signal display unit PEU-680B**

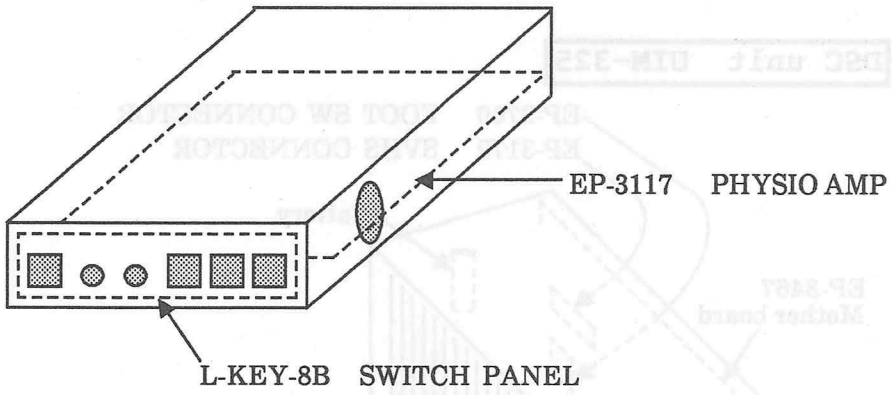


(EP-2841 ECG MEMORY is installed in DSC unit.)

## 8-5-6 Arrangement of ROMs

An arrangement of the ROMs (read only memory) and PALs (programmable array logic), both mounted on a PCB, is illustrated below. It should be noted that a change in artwork of the PCB might lead to an arrangement different from the illustrated one under any PCB version other than specified in the figure.

The following ROMs are used in the equipment whose

H (Hardware version) : 11
S (Software version) : 6
K (Modification record) : 3 only.

(H, S, and K are indicated in the history record label on the rear panel of equipment.)

**EP-3265B-3 MAIN CONTROL**

| | MODEL | PRO. No. | ROM No. |
|---|---|---|---|
| A | MO680-1 | 6.0 | 1 |
| B | MO680-1 | 6.0 | 2 |
| C | MO680-1 | 6.0 | 3 |
| D | MO680-1 | 6.0 | 4 |

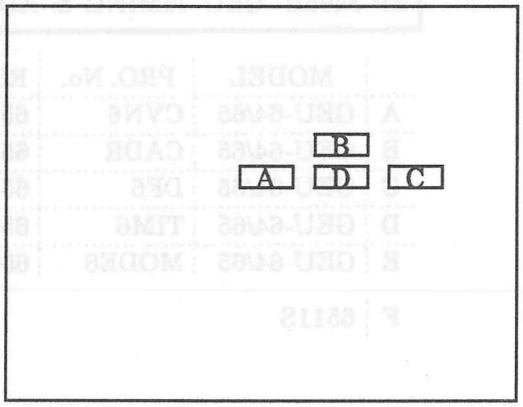


**EP-3459B RX FOCUS**

| | MODEL | PRO. No. | ROM No. |
|---|---|---|---|
| A | GEU-64/65 | RXROT | 5907C |
| B | GEU-64/65 | MASK | 5905C |
| C | GEU-64/65 | RXDLY2 | 5907B |
| D | GEU-64/65 | OFFSET | 5905B |

| | |
|---|---|
| E | 594H |

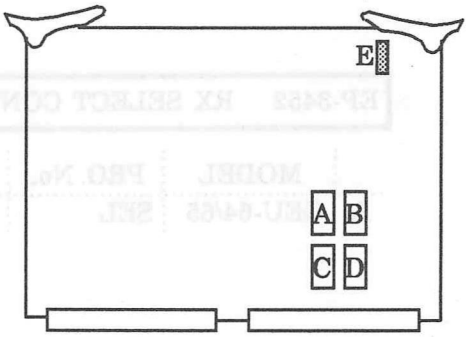


**EP-3463 VBPF & GAIN CONTROL**

| | |
|---|---|
| A | 6312B |

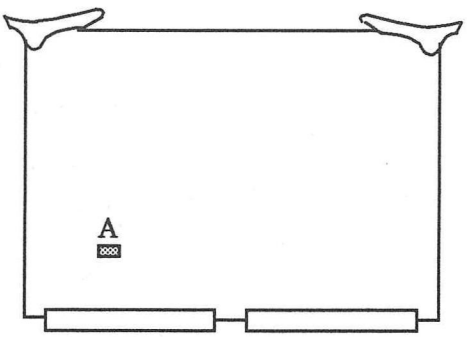

## EP-3464B TX TRIGGER GENE

| | MODEL | PRO. No. | ROM No. |
|---|---|---|---|
| A | GEU-64/65 | LCDLY1 | 6406H |
| B | GEU-64/65 | GEUAD2 | 6406C |
| C | GEU-64/65 | EMASK | 6405E |
| D | GEU-64/65 | TXROT | 6405C |

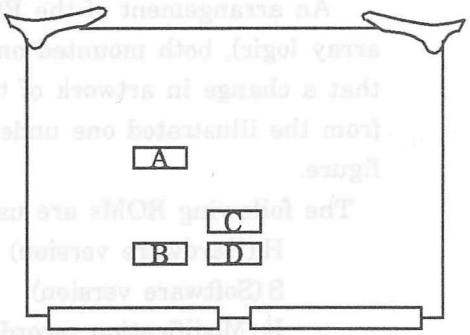


## EP-3465B GEU TIMING & ADDRESS

| | MODEL | PRO. No. | ROM No. |
|---|---|---|---|
| A | GEU-64/65 | CVN6 | 6511L |
| B | GEU-64/65 | CADR | 6510L |
| C | GEU-64/65 | DF6 | 6510J |
| D | GEU-64/65 | TIM6 | 6508P |
| E | GEU-64/65 | MODE6 | 6504F |
| F | 6511S | | |

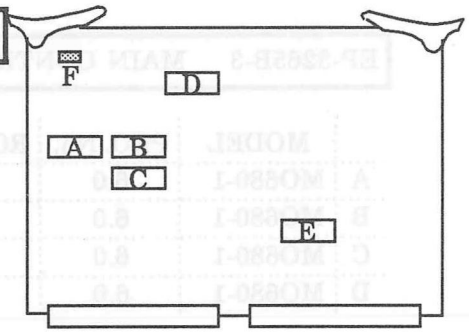


## EP-3452 RX SELECT CONT

| | MODEL | PRO. No. | ROM No. |
|---|---|---|---|
| A | GEU-64/65 | SEL | 5203C |

**EP-3247B B/W MEMORY**

| | MODEL | PRO. No. | ROM No. |
|---|---|---|---|
| A | UIM-325/6 | BUD1 | 4713E |
| B | UIM-325/6 | BUD2 | 4713D |
| C | UIM-325/6 | BUD1 | 4711E |
| D | UIM-325/6 | BUD2 | 4711D |

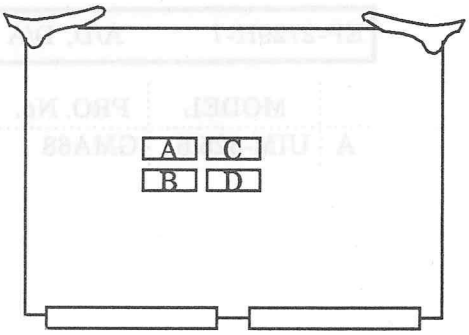


**EP-3236E DSC ADDRESS**

| | |
|---|---|
| A | 368L |
| B | 368D |
| C | 362KA |
| D | 361JA |

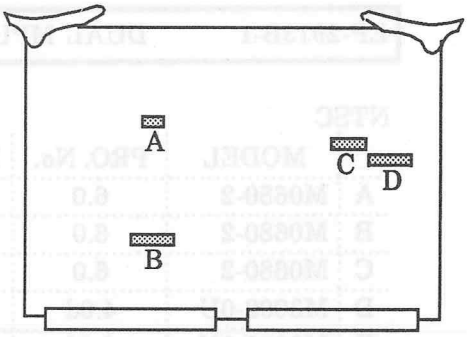


**EP-3620-1 DSC TIMING (for NTSC)**

| | MODEL | PRO. No. | ROM No. |
|---|---|---|---|
| A | UIM-325/6 | VTM | 2015C |
| B | UIM-325/6 | HTM | 2012C |
| C | UIM-325/6 | HIP | 207D |
| D | UIM-325/6 | LEP | 205D |
| E | UIM-325/6 | REP | 204D |

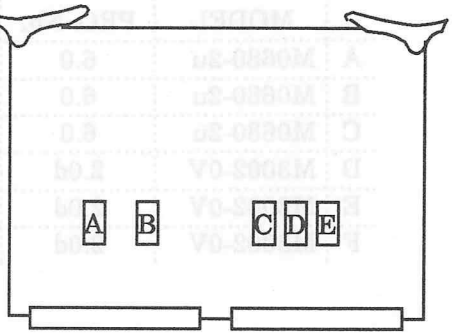


**EP-3620-2 DSC TIMING (for PAL)**

| | MODEL | PRO. No. | ROM No. |
|---|---|---|---|
| A | UIM-325/6 | VTM | 2015C |
| B | UIM-325/6 | PHTM | 2012C |
| C | UIM-325/6 | HIP | 207D |
| D | UIM-325/6 | LEP | 205D |
| E | UIM-325/6 | REP | 204D |

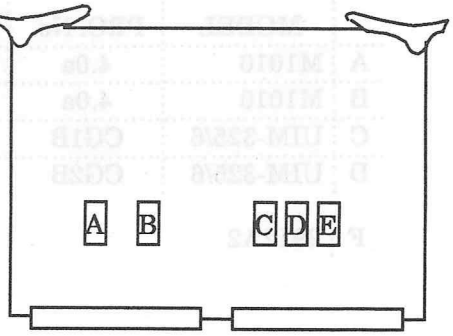

**EP-2729H-7 A/D, D/A**

| | MODEL | PRO. No. | ROM No. |
|---|---|---|---|
| A | UIM-325/6 | GMA68 | 295H |

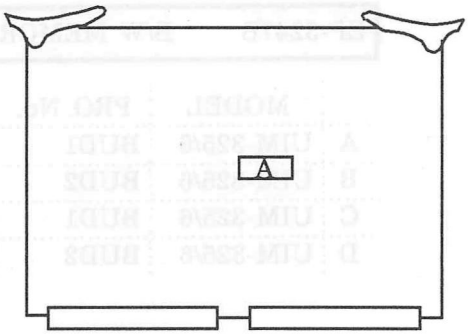


**EP-2913B-1 DUAL MPU**

NTSC

| | MODEL | PRO. No. | ROM No. |
|---|---|---|---|
| A | M0680-2 | 6.0 | 1 |
| B | M0680-2 | 6.0 | 2 |
| C | M0680-2 | 6.0 | 3 |
| D | M3002-0U | 4.0d | 1 |
| E | M3002-0U | 4.0d | 2 |
| F | M3002-0U | 4.0d | 3 |

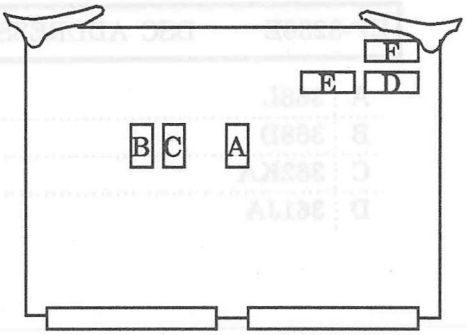


PAL

| | MODEL | PRO. No. | ROM No. |
|---|---|---|---|
| A | M0680-2u | 6.0 | 1 |
| B | M0680-2u | 6.0 | 2 |
| C | M0680-2u | 6.0 | 3 |
| D | M3002-0V | 2.0d | 1 |
| E | M3002-0V | 2.0d | 2 |
| F | M3002-0V | 2.0d | 3 |

**EP-2629D AGDC**

| | MODEL | PRO. No. | ROM No. |
|---|---|---|---|
| A | M1010 | 4.0a | 1 |
| B | M1010 | 4.0a | 2 |
| C | UIM-325/6 | CG1B | 2911D |
| D | UIM-325/6 | CG2B | 299D |
| F | 2912A2 | | |

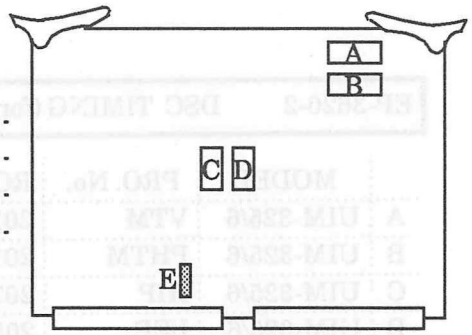

**EP-3477B-1 US ITF (for NTSC)**

| | MODEL | PRO. No. | ROM No. |
|---|---|---|---|
| A | UIM-325/6 | OFS | 778Q |
| B | UIM-325/6 | $CY_0L$ | 778L |
| C | UIM-325/6 | $X_0L$ | 778J |
| D | UIM-325/6 | MDXY | 776Q |
| E | UIM-325/6 | CDXY | 776N |
| F | UIM-325/6 | $CY_0H$ | 776L |
| G | UIM-325/6 | $X_0H$ | 776J |

| | |
|---|---|
| H | 778G |
| I | 776G |
| J | 776B |

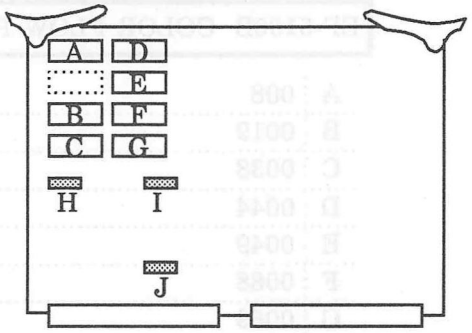


**EP-3477B-2 US ITF (for PAL)**

| | MODEL | PRO. No. | ROM No. |
|---|---|---|---|
| A | UIM-325/6 | POFS | 778Q |
| B | UIM-325/6 | $CY_0L$ | 778L |
| C | UIM-325/6 | $PX_0L$ | 778J |
| D | UIM-325/6 | PMDXY | 776Q |
| E | UIM-325/6 | PCDXY | 776N |
| F | UIM-325/6 | $CY_0H$ | 776L |
| G | UIM-325/6 | $PX_0H$ | 776J |

| | |
|---|---|
| H | 778G |
| I | 776G |
| J | 776B |

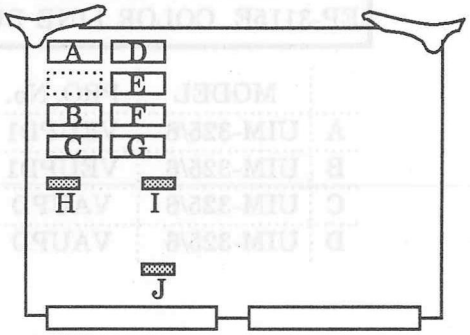


**EP-2651E-4 COLOR D/A**

| | MODEL | PRO. No. | ROM No. |
|---|---|---|---|
| A | UIM-325/6 | COLMD | 512D |

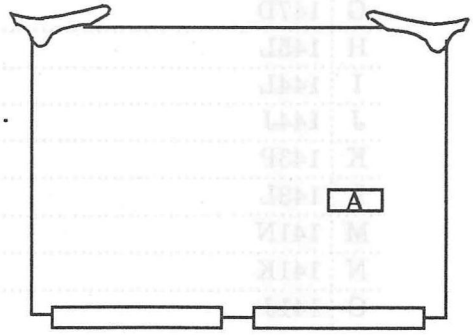

## EP-5100B COLOR FLOW PROCESSOR

| | |
|---|---|
| A | 008 |
| B | 0019 |
| C | 0038 |
| D | 0044 |
| E | 0049 |
| F | 0068 |
| G | 0069 |
| H | 0070 |
| I | 0071 |
| J | 0072 |
| K | 00117 |

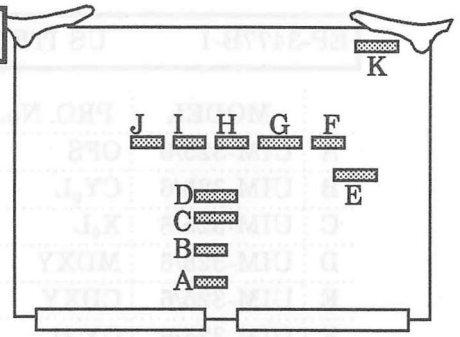


## EP-3115E COLOR LINE BUFFER

| | MODEL | PRO. No. | ROM No. |
|---|---|---|---|
| A | UIM-325/6 | VEUPD1 | 153J |
| B | UIM-325/6 | VEUPD1 | 153G |
| C | UIM-325/6 | VAUPD | 155J |
| D | UIM-325/6 | VAUPD | 155G |

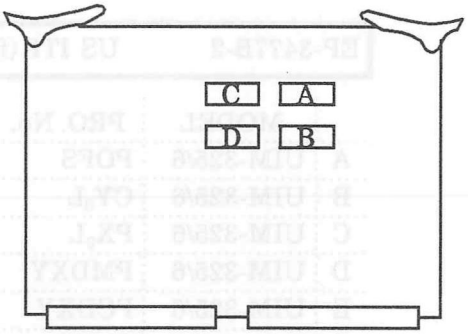


## EP-3114E COLOR POST PROCESS

| | |
|---|---|
| A | 148H |
| B | 148G |
| C | 148F |
| D | 148C |
| E | 147H |
| F | 147G |
| G | 147D |
| H | 145L |
| I | 144L |
| J | 144J |
| K | 143P |
| L | 143L |
| M | 141N |
| N | 141K |
| O | 141J |

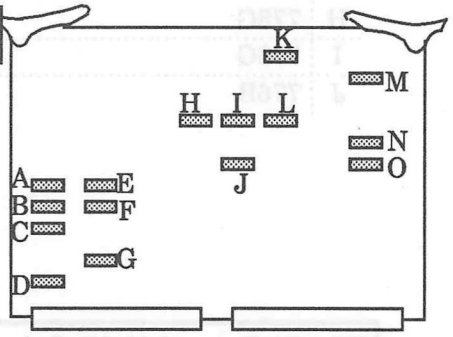

EP-2810B-3 DOP CONTROLLER

| | MODEL | PRO. No. | ROM No. |
|---|---|---|---|
| A | M-2006 | 1.0 | 1 |

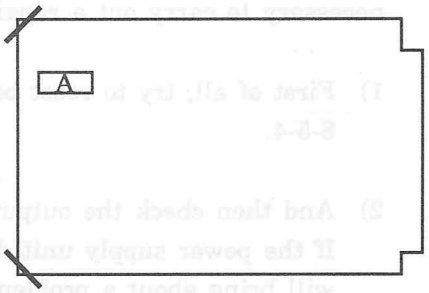


EP-3259C DOP FILTER

| | MODEL | PRO. No. | ROM No. |
|---|---|---|---|
| A | DM 2 -AGC | V1.0 | 114G |
| B | T112D | | |
| C | C113D | | |

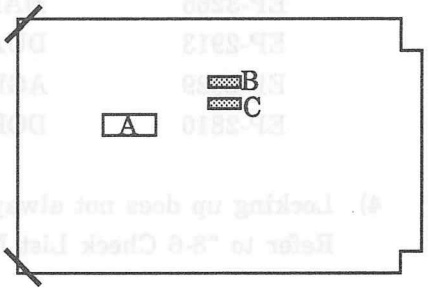


CDC-522A FFT board (NJK-196A)

| | |
|---|---|
| A | DZMD 124 |
| B | DZMD 125 |

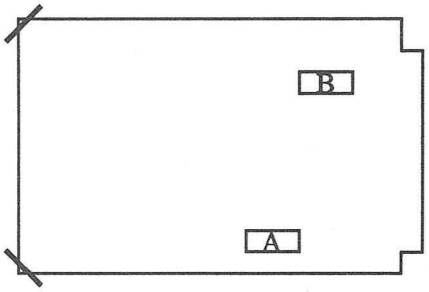


CDG-266A1 OUTPUT board (NJK-196A)

| | |
|---|---|
| A | DZMD 126 |
| B | DZMD 127A |

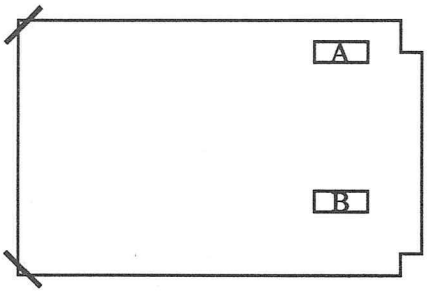

## 8-5-7 Correction for the Fail to Start or Locking up

If the system should fail to start up or does start up and lock up, it is necessary to carry out a repair operation while referring to the following items.

1) First of all, try to reset backup memory according to the method described in 8-5-4.

2) And then check the output voltage from power supply unit referring to 8-5-8. If the power supply unit does not supply +5V or supply abnormal voltage, it will bring about a problem affecting the entirety of the system.

3) The following PCBs are equipped with a CPU.

| | |
|---|---|
| EP-3265 | MAIN CONTROL |
| EP-2913 | DUAL MPU |
| EP-2629 | AGDC |
| EP-2810 | DOP CONTROLLER |

4) Locking up does not always caused by the PCB equipped with a CPU. Refer to "8-6 Check List Map" for details.

## 8-5-8 Power supply unit output connector list

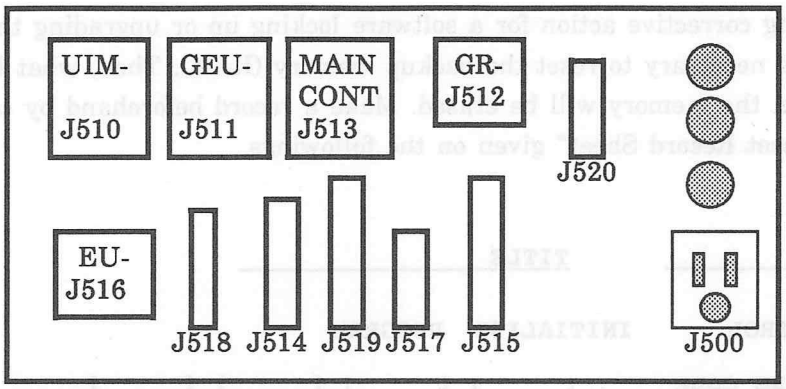


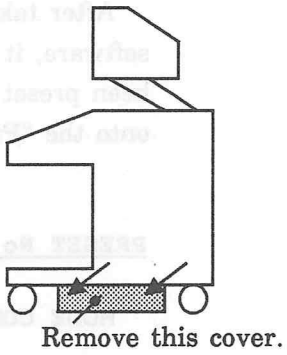


J510

| | | | | |
|---|---|---|---|---|
| 3 | −15VB | A.GND | +15.0V | 1 |
| | +5.1V | +5.1V | +5.1V | |
| | +5.1V | +5.1V | +5.1V | |
| | D.GND | D.GND | D.GND | |
| 15 | D.GND | D.GND | D.GND | 13 |

J511

| | | | | |
|---|---|---|---|---|
| 3 | −15VA | A.GND | +15.0V | 1 |
| | nc | +5.0V | +5.1V | |
| | −5.1V | +5.0V | +5.1V | |
| | A.GND | A.GND | D.GND | |
| 15 | A.GND | A.GND | D.GND | 13 |

J513

| | | | | |
|---|---|---|---|---|
| 3 | −15VA | A.GND | +15.0V | 1 |
| | A.GND | A.GND | +5.0V | |
| | −5.1V | +6.0V | +5.1V | |
| 12 | A.GND | A.GND | D.GND | 10 |

J512

| | | | | |
|---|---|---|---|---|
| 3 | −15VA | A.GND | +15.0V | 1 |
| | nc | +5.1V | +5.1V | |
| 9 | nc | D.GND | D.GND | 7 |

J516

| | | | | |
|---|---|---|---|---|
| 3 | −15VA | +15.0V | +5.0V | 1 |
| 6 | A.GND | A.GND | A.GND | 4 |

nc : No connection

J518

| | |
|---|---|
| DATA-0 | 1 |
| DATA-1 | |
| DATA-2 | |
| ON/OFF | |
| TRIG OFF | |
| A.GND | |
| RV-1 | |
| RV-2 | |
| RV-3 | |
| nc | 10 |

J519

| | |
|---|---|
| HV-A | 1 |
| A.GND | |
| HV-B | |
| A.GND | |
| nc | 5 |

J517

| | |
|---|---|
| +15.0V | 1 |
| A.GND | |
| A.GND | 3 |

J515

| | |
|---|---|
| +5.0V | 1 |
| A.GND | |
| −5.1V | |
| A.GND | |
| +15.0V | |
| A.GND | 6 |

J519

| | |
|---|---|
| nc | 1 |
| D.GND | |
| +5.1V | |
| D.GND | |
| +5.1V | 5 |

J517,J515, and J519 are not used in the standard SSD-680EX.

## 8-5-9 Preset Record Sheet

After taking corrective action for a software locking up or upgrading the software, it is necessary to reset the backup memory (RAM). Then, what has been preset in the memory will be erased. Make a record beforehand by copying onto the "Preset Record Sheet" given on the followings.

PRESET No. _____ TITLE _____

| MODE CONTROL | INITIALIZE | PROGRAM | | | |
|---|---|---|---|---|---|
| PROBE CODE | [ ] | [ ] | [ ] | [ ] | |
| MODE | B | B/B | B/M | B/PW | FLOW |
| MULTI IMAGE | 2B | 3B | 4B | | |
| MAGNIFICATION | ×0.7 | ×1 | ×1.5 | ×2 | |
| IMAGE DIRECT | ↑ | ↓ | → | ← | |
| ANNOTATION | ABDOM | OB/GY | PV | OTHER | |
| BODY MARK | ABDOM | OB/GY | HEAD | BREAST | |
| PUNCT. GUIDE | OFF | ON | | | |
| CHAR. DISPLAY | OFF | ON | | | |
| CAMERA | B/W | COLOR | | | |
| STORE MEMORY | ON | OFF | | | |

| IMAGE CONTROL | INITIALIZE | PROGRAM | | | |
|---|---|---|---|---|---|
| VIEW GAMMA | A | B | STD | | |
| PHOTO GAMMA | A | B | C | | |
| FRAME CORR | OFF | LOW | HIGH | | |
| PRE PROCESS | OFF | LOW | MID | HIGH | |
| POST PROCESS | LINEAR | SLOPE1 | SLOPE2 | SLOPE3 | |
| | | [ , ] | [ , ] | [ , ] | |
| FOCUS B | 1 | 2 | 3 | 4 | BROAD |
| FOCUS M | 1 | 2 | 3 | 4 | |

| PW CONTROL | INITIALIZE | PROGRAM | | | |
|---|---|---|---|---|---|
| VEL. RANGE | | 2KHZ | 4KHZ | 6KHZ | 8KHZ |
| FILTER | 50HZ | 100HZ | 200HZ | 400HZ | 800HZ |
| SAMPLE VOLUME | 1mm | 2mm | 3mm | 5mm | 10mm |
| PRE COMP | LOW | MID1 | MID2 | HIGH | |
| REJECT | [ /14] | | | | |
| BASE LINE | LOW | MIDL | CENT | MIDH | HIGH |
| INVERT | NORM | INVERT. | | | |
| UNIT | M/S | CM/S | KHZ | | |

FLOW CONTROL LARG V, SMALL V, PV, THYROID, CARDIO
INITIALIZE PROGRAM

| | | | | | |
|---|---|---|---|---|---|
| COLOR DISPLAY | V/VAR1 | V/VAR2 | VAR | V-ENH1 | V-ENH2 |
| VEL. RANGE | 0.5KHz | 1KHZ | 2KHZ | 4KHZ | 6KHZ |
| FILTER | LOW | MID1 | MID2 | HIGH | |
| COL AVERAGE | LOW | MID | HIGH | HORI | |
| COL REJECT | [ /32] | | | | |
| DISPLAY AREA | WIDE | MID1 | MID2 | NARR | |
| AREA LOCK | OFF | ON | | | |
| COLOR EDGE | COL-CUT [ /63] | | WHT-CUT [ /63] | | |
| FLOW ENHANC | LOW2 | LOW1 | STD | HIGH1 | HIGH2 |
| FRAME CORR | OFF | LOW | MID | HIGH | |
| FOCUS | 1 | 2 | 3 | 4 | BROAD |
| COL POLARITY | NORMAL | INVERT | | | |
| SPACIAL FILT | OFF | LOW | MID | HIGH | |
| LINE DENSITY | LOW | HIGH | | | |
| APPLICATION | ABDOMEN | CARDIO | | | |

MEAS CONTROL INITIALIZE PROGRAM

| | | | | |
|---|---|---|---|---|
| B MODE | DIST, AREA-T, AREA-E, VOL, OB, HIST, RATIO, %STEN | | | |
| PRIORITY | [ ] | | | |
| PAGE1 | [ ] | [ ] | [ ] | [ ] |
| PAGE2 | [ ] | [ ] | [ ] | [ ] |

| | | | | |
|---|---|---|---|---|
| M MODE | DIST, %STEN, RATIO, M-RATE, POMBO, TEICH | | | |
| PRIORITY | [ ] | | | |
| PAGE1 | [ ] | [ ] | [ ] | [ ] |
| PAGE2 | [ ] | [ ] | [ ] | [ ] |

| | | | | |
|---|---|---|---|---|
| PW MODE | VEL, F-VOL, AVERG, ACCEL, PUL-IND, POU-IND, RATIO, P-GRAD | | | |
| PRIORITY | [ ] | | | |
| PAGE1 | [ ] | [ ] | [ ] | [ ] |
| PAGE2 | [ ] | [ ] | [ ] | [ ] |

**OB_PROG** Common to PRESET 1~5.
(Different setting in each PRESET is not possible.)

```
OB-PROGRAM

FETAL WEIGHT CALCULATION

   1   TOKYO UNIV./OSAKA UNIV.
   2   HADLOCK/SHEPARD
```

```
                OB REPORT PROGRAM

GESTATIONAL TABLE          DIMENSION
  1      (        )          HC   :[      ]
  2      (        )          AC   :[      ]
  3      (        )          USR1:[      ]
  4      (        )          USR2:[      ]
  5      (        )
  6      (        )

RATIOS
  1 N/D
     N:[     ]
     D:[     ]
  2 N/D
     N:[     ]
     D:[     ]
```

```
TABLE NO.  :
PARAMETER  :[     ]
DIMENSION  :
BASED ON   :[          ]

 W  ±d        cm          W  ±d        cm
 1                       22
 2                       23
 3                       24
 4                       25
 5                       26
 6                       27
 7                       28
 8                       29
 9                       30
10                       31
11                       32
12                       33
13                       34
14                       35
15                       36
16                       37
17                       38
18                       39
19                       40
20                       41
21                       42
```

TABLE NO. :
PARAMETER :[ ]
DIMENSION :
BASED ON :[ ]

| W | ±d | cm | W | ±d | cm |
|---|---|---|---|---|---|
| 1 | | | 22 | | |
| 2 | | | 23 | | |
| 3 | | | 24 | | |
| 4 | | | 25 | | |
| 5 | | | 26 | | |
| 6 | | | 27 | | |
| 7 | | | 28 | | |
| 8 | | | 29 | | |
| 9 | | | 30 | | |
| 10 | | | 31 | | |
| 11 | | | 32 | | |
| 12 | | | 33 | | |
| 13 | | | 34 | | |
| 14 | | | 35 | | |
| 15 | | | 36 | | |
| 16 | | | 37 | | |
| 17 | | | 38 | | |
| 18 | | | 39 | | |
| 19 | | | 40 | | |
| 20 | | | 41 | | |
| 21 | | | 42 | | |

TABLE NO. :
PARAMETER :[ ]
DIMENSION :
BASED ON :[ ]

| W | ±d | cm | W | ±d | cm |
|---|---|---|---|---|---|
| 1 | | | 22 | | |
| 2 | | | 23 | | |
| 3 | | | 24 | | |
| 4 | | | 25 | | |
| 5 | | | 26 | | |
| 6 | | | 27 | | |
| 7 | | | 28 | | |
| 8 | | | 29 | | |
| 9 | | | 30 | | |
| 10 | | | 31 | | |
| 11 | | | 32 | | |
| 12 | | | 33 | | |
| 13 | | | 34 | | |
| 14 | | | 35 | | |
| 15 | | | 36 | | |
| 16 | | | 37 | | |
| 17 | | | 38 | | |
| 18 | | | 39 | | |
| 19 | | | 40 | | |
| 20 | | | 41 | | |
| 21 | | | 42 | | |

TABLE NO. :
PARAMETER :[ ]
DIMENSION :
BASED ON :[ ]

| W | ±d | cm | W | ±d | cm |
|---|---|---|---|---|---|
| 1 | | | 22 | | |
| 2 | | | 23 | | |
| 3 | | | 24 | | |
| 4 | | | 25 | | |
| 5 | | | 26 | | |
| 6 | | | 27 | | |
| 7 | | | 28 | | |
| 8 | | | 29 | | |
| 9 | | | 30 | | |
| 10 | | | 31 | | |
| 11 | | | 32 | | |
| 12 | | | 33 | | |
| 13 | | | 34 | | |
| 14 | | | 35 | | |
| 15 | | | 36 | | |
| 16 | | | 37 | | |
| 17 | | | 38 | | |
| 18 | | | 39 | | |
| 19 | | | 40 | | |
| 20 | | | 41 | | |
| 21 | | | 42 | | |

**ANNOTATION** Common to PRESET 1~5.
(Different setting in each PRESET is not possible.)

| | | | | | | | | | |
|---|---|---|---|---|---|---|---|---|---|
| **ABDOM1** | [ | ] | [ | ] | [ | ] | [ | ] | [ ] |
| **ABDOM2** | [ | ] | [ | ] | [ | ] | [ | ] | [ ] |
| **OB/GY1** | [ | ] | [ | ] | [ | ] | [ | ] | [ ] |
| **OB/GY2** | [ | ] | [ | ] | [ | ] | [ | ] | [ ] |
| **PV1** | [ | ] | [ | ] | [ | ] | [ | ] | [ ] |
| **PV2** | [ | ] | [ | ] | [ | ] | [ | ] | [ ] |
| **OTHER1** | [ | ] | [ | ] | [ | ] | [ | ] | [ ] |
| **OTHER2** | [ | ] | [ | ] | [ | ] | [ | ] | [ ] |

## 8-6 Check List Map

This "check list map" provides you with the data, based on which you may assume a PCB or unit considered to have caused the equipment failure. It comprises the following information:

- Phenomenon Code : General failure phenomena have been classified into codes. A failure is related with the "map" through each of the codes.

- Map : This is a table showing the relations of a "Code" given in the "Phenomenon Codes, that is, a failure phenomenon, with the PCB or unit assumed to cause that failure.

### 8-6-1 Phenomenon Code

The general failure phenomena envisaged herein are roughly classified as described below while being coded with two alphabetical characters:

| Failure Phenomenon | Code |
|---|---|
| Failure relating to an ultrasound image | **US** |
| Failure relating to a character or graphic displayed | **CG** |
| Failure relating to timing and monitoring | **TM** |
| Failure relating to general operations and functions | **FU** |
| Failure relating to power supplies, records, switches and/or controls | **PM** |
| Failure relating to a physiological signals | **PH** |
| Failure relating to Doppler | **DP** |
| Failure relating to color displays | **CD** |

Shown from the next page and on is a summary of the failure phenomena by alphabetical code as referred to above.

## UltraSound image

| Code | | Aply | Problems |
|---|---|---|---|
| item | div. | | |
| US-1 | 1 | ○ | Ultrasound image is not all displayed. |
| | 2 | ○ | Ultrasound image is not all displayed in a particular MODE. |
| | 3 | ○ | Ultrasound image is not all displayed only for LINEAR (or CONVEX ). |
| | 4 | | Ultrasound image is not all displayed only for MECHANICAL SCANNER. |
| | 5 | | Ultrasound image is not all displayed only for PHASED ARRAY. |
| | 6 | ○ | Only particular Ultrasound image is not displayed in multiples Ultrasound image displays. |
| US-2 | 1 | ○ | Display of Ultrasound image area become white. |
| US-3 | 1 | ○ | Unnecessary dots or lines are displayed in Ultrasound image area. |
| | 2 | ○ | Regular horizontal or vertical stripes are displayed in Ultrasound image area . |
| US-4 | 1 | ○ | Lacks of ECHO are displayed in LINEAR ( or CONVEX ). |
| | 2 | | Lacks of ECHO are displayed in MECHANICAL SCANNER. |
| | 3 | | Lacks of ECHO are displayed in PHASED ARRAY. |
| US-5 | 1 | ○ | Noises are seen on the Ultrasound image in LINEAR ( or CONVEX ) |
| | 2 | | Noises are seen on the Ultrasound image in MECHANICAL SCANNER. |
| | 3 | | Noises are seen on the Ultrasound image in PHASED ARRAY. |
| | 4 | ○ | Noises are seen on the Ultrasound image in all Ultrasound images. |
| US-6 | 1 | ○ | Sensitivity of Ultrasound image is low in LINEAR ( or CONVEX ). |
| | 2 | | Sensitivity of Ultrasound image is low in MECHANICAL SCANNER. |
| | 3 | | Sensitivity of Ultrasound image is low in PHASED ARRAY. |
| | 4 | ○ | Sensitivity of Ultrasound image is low in all Ultrasound images. |
| US-7 | 1 | ○ | Same as depth band is difference brightness in Ultrasound image. |
| US-8 | 1 | ○ | Image varies as if enhanced, without gradation. |
| | 2 | ○ | Ultrasound image becomes moire in MECHANICAL SCANNER, PHASED ARRAY, CONVEX. |
| US-9 | 1 | ○ | Form of Ultrasound image is abnormally displayed. |
| US-10 | 1 | ○ | Unnecessary multiples of Ultrasound image are displayed in LINEAR ( or CONVEX ). |
| | 2 | | Unnecessary multiples of Ultrasound image are displayed in MECHANICAL SCANNER. |
| | 3 | | Unnecessary multiples of Ultrasound image are displayed in PHASED ARRAY. |
| | 4 | ○ | Unnecessary multiples of Ultrasound image are displayed in all Ultrasound images. |

○:Marked items are effective on this system.

## Characters & Graphics

| Code | | Aply | Problems |
|---|---|---|---|
| item | div. | | |
| CG-1 | 1 | ○ | Characters are displayed in the entire screen. |
| CG-2 | 1 | ○ | Only Caliper, Graphic are not displayed. |
| | 2 | ○ | Only Caliper, Graphic are abnormally displayed. |
| CG-3 | 1 | ○ | The entire screen become white. |
| | 2 | ○ | Unnecessary dots or stripes are displayed in all or parts of image. |
| CG-4 | 1 | ○ | TIME and DATE are abnormally displayed. |
| CG-5 | 1 | ○ | Characters are not displayed, key in cannot be made. |
| | 2 | ○ | Characters are abnormally displayed. |
| CG-6 | 1 | ○ | Measured value is not correct. |

○:Marked items are effective on this system.

## Timing & Monitor

| Code | | Aply | Problems |
|---|---|---|---|
| item | div. | | |
| TM-1 | 1 | ○ | All images are not displayed in any Monitor. |
| | 2 | ○ | Image is not displayed in a particular Monitor. |
| TM-2 | 1 | ○ | All Image are not synchronized in any Monitor. |
| | 2 | ○ | Image is not synchronized in a particular Monitor. |
| TM-3 | 1 | ○ | Entire image shake. Abnormality is seen when brightness varies in any Monitor. |
| | 2 | ○ | Entire image shake in a particular Monitor. Abnormality is seen. |

○:Marked items are effective on this system.

## FUnctions

| Code | | Aply | Problems |
|---|---|---|---|
| item | div | | |
| FU-1 | 1 | ○ | System locks up, or panel information is not accepted. |
| | 2 | | The ERROR messages are shown on the monitor. |

○:Marked items are effective on this system.

## Power supply, Memorize (record), Switch & Controls

| Code | | Aply | Problems |
|---|---|---|---|
| item | div. | | |
| PM-1 | 1 | ○ | Power output is not present, or abnormally outputted. |
| PM-2 | 1 | ○ | Switches and/or Controls are inoperative. |
| | 2 | ○ | Switches and/or Controls are abnormally operated. |
| | 3 | ○ | Camera shutter (or printing) is inoperative. |
| PM-3 | 1 | ○ | Photographed picture is not normal (Monitor is normal). |
| | 2 | ○ | Playbacked image is abnormally displayed (usual image is normal ). |
| PM-4 | 1 | | All images are not recorded in Recorder ( Recorder is normal ). |
| | 2 | | All images are not recorded in Recorder ( Recorder is abnormal ). |
| | 3 | | Image is abnormally recorded in Recorder ( Recorder is normal ). |
| | 4 | | Image is abnormally recorded in Recorder ( Recorder is abnormal ). |

○:Marked items are effective on this system.

## PHysiological Signal

| Code | | Aply | Problems |
|---|---|---|---|
| item | div. | | |
| PH-1 | 1 | ○ | ECG (EKG) waveform is not displayed. |
| | 2 | ○ | ECG (EKG) waveform is abnormally displayed or sensitivity is low. |
| | 3 | ○ | ECG (EKG) waveform is abnormally displayed in a particular Mode, or not displayed. |
| | 4 | ○ | ECG (EKG) Synchronization is not correctly operated. |
| PH-2 | 1 | | PULSE waveform is not displayed. |
| | 2 | | PULSE waveform is abnormally displayed, or sensitivity is low. |
| PH-3 | 1 | | PCG waveform is not displayed. |
| | 2 | | PCG waveform is abnormally displayed, or sensitivity is low. |

○:Marked items are effective on this system.

## DoPpler

| Code | | Aply | Problems |
|---|---|---|---|
| item | div. | | |
| DP-1 | 1 | ○ | Doppler image is not displayed. |
| | 2 | ○ | Doppler image is not displayed in a particular Mode. |
| | 3 | ○ | Doppler image is not displayed in a particular Probe. |
| | 4 | ○ | Doppler image is not displayed either PW or CW. |
| DP-2 | 1 | ○ | Doppler image is abnormally displayed. |
| | 2 | ○ | Doppler image is abnormally displayed in a particular Mode. |
| | 3 | ○ | Doppler image is abnormally displayed in a particular Probe. |
| | 4 | ○ | Doppler image is abnormally displayed either PW or CW. |
| DP-3 | 1 | ○ | Mirror or Side band noise appear on image or a large amount of noise. |
| | 2 | ○ | Mirror or Side band appear in a particular Mode, or a large amount of noise. |
| | 3 | ○ | Mirror or Side band appear in a particular Probe, or a large amount of noise. |
| | 4 | ○ | Mirror or Side band appear either PW or CW. |
| DP-4 | 1 | ○ | Sensitivity of Doppler image is low. |
| | 2 | ○ | Sensitivity of Doppler image is low in a particular Mode. |
| | 3 | ○ | Sensitivity of Doppler image is low in a particular Probe. |
| | 4 | ○ | Sensitivity of Doppler image is low either PW or CW. |
| DP-5 | 1 | ○ | Doppler sound is low or not outputted. |
| DP-6 | 1 | | Doppler PPM is not displayed. |
| | 2 | | Doppler PPM is abnormally displayed. |

○:Marked items are effective on this system.

## Color Display

| Code | | Aply | Problems |
|---|---|---|---|
| item | div. | | |
| CD-1 | 1 | ○ | Color is not displayed in Ultrasound image area. |
| | 2 | | Color is not displayed in Ultrasound image area in a particular Mode. |
| | 3 | ○ | Color is not displayed in Ultrasound image area in a particular Probe. |
| CD-2 | 1 | ○ | Color noises are seen in Ultrasound image area, or a large amount of noises are seen. |
| | 2 | | Noises are seen in Ultrasound image in a particular Mode. |
| | 3 | ○ | Noises are seen in Ultrasound image in a particular Probe. |
| CD-3 | 1 | ○ | Color is abnormally displayed in Ultrasound image area. |
| | 2 | | Color is abnormally displayed in Ultrasound image area in a particular Mode. |
| | 3 | ○ | Color is abnormally displayed in Ultrasound image area in a particular Probe. |
| CD-4 | 1 | ○ | Color is abnormally displayed in Playback mode. |
| CD-5 | 1 | ○ | Color is not displayed entire image, or abnormally displayed. |

○:Marked items are effective on this system.

## 8-6-2 Map

Concerning the typical failure phenomena identified by "Phenomenon Codes," those PCBs or units which may be deemed to have caused such phenomena are shown below. This map has phenomena classified by "failure code." A PCB or unit assumed to be causative of the related phenomenon is marked with a "check code" for your referring to the "Check Procedure".

| Check List Problem Code | | US-1 | | | | US-2 | US-3 | | US-4 | US-5 | | US-6 | | US-7 |
|---|---|---|---|---|---|---|---|---|---|---|---|---|---|---|
| Item | Code | 1 | 2 | 3 | 6 | 1 | 1 | 2 | 1 | 1 | 4 | 1 | 4 | 1 |
| Operation | A1 | ● | | ● | | | | | | | | ● | ● | |
| External Noise | A2 | | | | | | | | | ● | ● | | | |
| Power Supply (PSU-S680*) | A3 | ● | | ● | | | | | | | | ● | ● | |
| Probe | A4 | ● | | ● | | | | | ● | ● | ● | | | |
| TV Monitor | A5 | | | | | | | | | | | | | |
| EP-3265 Main Control | B1 | | | | | | | | | | | | | |
| EP-2960 Main Panel | B2 | | | | | | | | | | | | | |
| L-KEY-26 Full keyboard | B3 | | | | | | | | | | | | | |
| EP-2512 Blind Panel | B4 | | | | | | | | | | | | | |
| EP-3466 (GEU) Mother Board | C1 | | | | | | | | | | | | | |
| EP-3452 Rx Select Cont | C2 | | | | | | | | ● | | | | | |
| EP-3453-1~-5 Probe Select Relay | C3 | | | | | | | | | | | | | |
| EP-3454 Probe Selector | C4 | | | | | | | | | | | | | |
| EP-3455 RX SELECT | C5 | | | | | | | | ● | | | | | |
| EP-3456 TX 1 | C6 | | | | | | | | ● | | | | | |
| EP-3457 TX 2 | C7 | | | | | | | | ● | | | | | |
| EP-3458 Pre Amp | C8 | | | | | | | | ● | | | | | |
| EP-3459 Rx Focus | C9 | | | | | | | | | | | | | |
| EP-3461 Main Amp & Color ITF | C10 | ● | | ● | | ● | | | | ● | ● | ● | ● | |
| EP-3463 VBPF & Gain Control | C11 | ● | | ● | | | | | | | | | | ● |
| EP-3464 Tx Trigger Gene | C12 | ● | | ● | | | | | | | | | | |
| EP-3465 GEU Timing & Address | C13 | ● | ● | ● | ● | | | | ● | | | | | |
| EP-3525 GEU Interface | C14 | ● | ● | ● | ● | | | | | | | | | |
| EP-3467 (DSC) Mother Board | D1 | | | | | | | | | | | | | |
| EP-3247 B/W Memory | D2 | ● | ● | ● | ● | | ● | ● | | | | | | |
| EP-3236 DSC Address | D3 | ● | ● | ● | ● | | ● | ● | | | | | | |
| EP-3620 DSC Timing | D4 | ● | ● | ● | ● | | ● | ● | | | | | | |
| EP-2729 A/D, D/A | D5 | ● | | ● | | ● | | | | | | | | |
| EP-2913 Dual MPU | D6 | | | | | | | | | | | | | |
| EP-2629 AGDC | D7 | | | | | | | | | | | | | |
| EP-3477 US ITF | D8 | ● | ● | ● | ● | | | | | | | | | |
| EP-2651 Color D/A | D9 | | | | | | | | | | | | | |
| EP-3237 B/W Cine Memory | D10 | ● | ● | ● | ● | | ● | ● | | | | | | |
| EP-5100 Color Flow Processor | D11 | | | | | | | | | | | | | |
| EP-3115 Color Line Buffer | D12 | | | | | | | | | | | | | |
| EP-3114 Color Post Process | D13 | | | | | | | | | | | | | |
| EP-2213 Color Memory VEL | D14 | | | | | | | | | | | | | |
| EP-2213 -1 Color Memory VAR | D15 | | | | | | | | | | | | | |
| EP-3238 Color Cine Memory | D16 | | | | | | | | | | | | | |
| EP-3443 Video ITF | D17 | | | | | | | | | | | | | |
| FFA-18* Doppler unit | E1 | | | | | | | | | | | | | |
| EP-3117 Physio Amp | F1 | | | | | | | | | | | | | |
| EP-2841 ECG Memory | F2 | | | | | | | | | | | | | |
| SSZ-700/203 Color printer/camera | G1 | | | | | | | | | | | | | |
| VTR | G3 | | | | | | | | | | | | | |

| Check List / Item | Code | US-8 | | US-9 | US-10 | | CG-1 | CG-2 | | CG-3 | | CG-4 | CG-5 | | CG-6 |
|---|---|---|---|---|---|---|---|---|---|---|---|---|---|---|---|
| Problem Code | | 1 | 2 | 1 | 1 | 4 | 1 | 1 | 2 | 1 | 2 | 1 | 1 | 2 | 1 |
| Operation | A1 | ● | | | | | | | | | | | | | |
| External Noise | A2 | | | | | | | | | | | | | | |
| Power Supply (PSU-S680*) | A3 | | | | | | | | | | | | | | |
| Probe | A4 | | | | | | | | | | | | | | |
| TV Monitor | A5 | | | | | | | | | | | | | | |
| EP-3265 Main Control | B1 | | | | | | | | | | | | | | |
| EP-2960 Main Panel | B2 | | | | | | | | | | | | | | |
| L-KEY-26 Full keyboard | B3 | | | | | | | | | | | | ● | | |
| EP-2512 Blind Panel | B4 | | | | | | | | | | | | | | |
| EP-3466 (GEU) Mother Board | C1 | | | | | | | | | | | | | | |
| EP-3452 Rx Select Cont | C2 | | | | | | | | | | | | | | |
| EP-3453-1~-5 Probe Select Relay | C3 | | | | | | | | | | | | | | |
| EP-3454 Probe Selector | C4 | | | | | | | | | | | | | | |
| EP-3455 RX SELECT | C5 | | | | | | | | | | | | | | |
| EP-3456 TX 1 | C6 | | | | | | | | | | | | | | |
| EP-3457 TX 2 | C7 | | | | | | | | | | | | | | |
| EP-3458 Pre Amp | C8 | | | | | | | | | | | | | | |
| EP-3459 Rx Focus | C9 | | | | | | | | | | | | | | |
| EP-3461 Main Amp & Color ITF | C10 | | | | | | | | | | | | | | |
| EP-3463 VBPF & Gain Control | C11 | | | | | | | | | | | | | | |
| EP-3464 Tx Trigger Gene | C12 | | | | | | | | | | | | | | |
| EP-3465 GEU Timing & Address | C13 | | | ● | | | | | | | | | | | |
| EP-3525 GEU Interface | C14 | | | ● | | | | | | | | | | | |
| EP-3467 (DSC) Mother Board | D1 | | | | | | | | | | | | | | |
| EP-3247 B/W Memory | D2 | ● | ● | | | | | | | | | | | | |
| EP-3236 DSC Address | D3 | | | ● | ● | ● | | | | | | | | | |
| EP-3620 DSC Timing | D4 | ● | ● | | | | | | | ● | | | | | |
| EP-2729 A/D, D/A | D5 | ● | | | | | | | | ● | | | | | |
| EP-2913 Dual MPU | D6 | | | | | | ● | | | | | | | | ● |
| EP-2629 AGDC | D7 | | | | | | ● | ● | ● | ● | ● | ● | ● | ● | |
| EP-3477 US ITF | D8 | | | ● | ● | ● | | | | | | | | | |
| EP-2651 Color D/A | D9 | | | | | | | | | ● | ● | | | | |
| EP-3237 B/W Cine Memory | D10 | ● | ● | | | | | | | | | | | | |
| EP-5100 Color Flow Processor | D11 | | | | | | | | | | | | | | |
| EP-3115 Color Line Buffer | D12 | | | | | | | | | | | | | | |
| EP-3114 Color Post Process | D13 | | | | | | | | | | | | | | |
| EP-2213 Color Memory VEL | D14 | | | | | | | | | | | | | | |
| EP-2213 -1 Color Memory VAR | D15 | | | | | | | | | | | | | | |
| EP-3238 Color Cine Memory | D16 | | | | | | | | | | | | | | |
| EP-3443 Video ITF | D17 | | | | | | | | | ● | | | | | |
| FFA-18* Doppler unit | E1 | | | | | | | | | | | | | | |
| EP-3117 Physio Amp | F1 | | | | | | | | | | | | | | |
| EP-2841 ECG Memory | F2 | | | | | | | | | | | | | | |
| SSZ-700/203 Color printer/camera | G1 | | | | | | | | | | | | | | |
| VTR | G3 | | | | | | | | | | | | | | |

| Check List / Item | Code | TM-1 | | TM-2 | | TM-3 | | FU-1 | PM-1 | PM-2 | | | PM-3 | |
|---|---|---|---|---|---|---|---|---|---|---|---|---|---|---|
| | | 1 | 2 | 1 | 2 | 1 | 2 | 1 | 1 | 1 | 2 | 3 | 1 | 2 |
| Operation | A1 | ● | | | | | | | | | | | | |
| External Noise | A2 | | | | | | | | | | | | | |
| Power Supply (PSU-S680*) | A3 | ● | | | | | | ● | ● | | | | | |
| Probe | A4 | | | | | | | | | | | | | |
| TV Monitor | A5 | | ● | | ● | | ● | | | | | | | |
| EP-3265 Main Control | B1 | | | | | | | ● | | ● | ● | ● | | |
| EP-2960 Main Panel | B2 | | | | | | | | | ● | ● | ● | | |
| L-KEY-26 Full keyboard | B3 | | | | | | | | | | | | | |
| EP-2512 Blind Panel | B4 | | | | | | | | | ● | ● | | | |
| EP-3466 (GEU) Mother Board | C1 | | | | | | | | | | | | | |
| EP-3452 Rx Select Cont | C2 | | | | | | | | | | | | | |
| EP-3453-1~-5 Probe Select Relay | C3 | | | | | | | | | | | | | |
| EP-3454 Probe Selector | C4 | | | | | | | | | | | | | |
| EP-3455 RX SELECT | C5 | | | | | | | | | | | | | |
| EP-3456 TX 1 | C6 | | | | | | | | | | | | | |
| EP-3457 TX 2 | C7 | | | | | | | | | | | | | |
| EP-3458 Pre Amp | C8 | | | | | | | | | | | | | |
| EP-3459 Rx Focus | C9 | | | | | | | | | | | | | |
| EP-3461 Main Amp & Color ITF | C10 | | | | | | | | | | | | | |
| EP-3463 VBPF & Gain Control | C11 | | | | | | | | | | | | | |
| EP-3464 Tx Trigger Gene | C12 | | | | | | | | | | | | | |
| EP-3465 GEU Timing & Address | C13 | | | | | | | | | | | | | |
| EP-3525 GEU Interface | C14 | | | | | | | | | | | | | |
| EP-3467 (DSC) Mother Board | D1 | | | | | | | | | | | | | |
| EP-3247 B/W Memory | D2 | | | | | | | | | | | | | |
| EP-3236 DSC Address | D3 | | | | | | | | | | | | | |
| EP-3620 DSC Timing | D4 | ● | | ● | | | | ● | | | | | | |
| EP-2729 A/D, D/A | D5 | | | | | | | | | | | | ● | ● |
| EP-2913 Dual MPU | D6 | | | | | | | ● | | | | | | |
| EP-2629 AGDC | D7 | | | | | | | ● | | | | | | |
| EP-3477 US ITF | D8 | | | | | | | | | | | | | |
| EP-2651 Color D/A | D9 | | | ● | | ● | | | | | | | | |
| EP-3237 B/W Cine Memory | D10 | | | | | | | | | | | | | |
| EP-5100 Color Flow Processor | D11 | | | | | | | | | | | | | |
| EP-3115 Color Line Buffer | D12 | | | | | | | | | | | | | |
| EP-3114 Color Post Process | D13 | | | | | | | | | | | | | |
| EP-2213 Color Memory VEL | D14 | | | | | | | | | | | | | |
| EP-2213-1 Color Memory VAR | D15 | | | | | | | | | | | | | |
| EP-3238 Color Cine Memory | D16 | | | | | | | | | | | | | |
| EP-3443 Video ITF | D17 | ● | | ● | | ● | | | | | | | ● | ● |
| FFA-18* Doppler unit | E1 | | | | | | | | | | | | | |
| EP-3117 Physio Amp | F1 | | | | | | | | | | | | | |
| EP-2841 ECG Memory | F2 | | | | | | | | | | | | | |
| SSZ-700/203 Color printer/camera | G1 | | | | | | | | | | | | ● | |
| VTR | G3 | | | | | | | | | | | | | ● |

| Check List Problem Code | | PH-1 | | | |
|---|---|---|---|---|---|
| Item | Code | 1 | 2 | 3 | 4 |
| Operation | A1 | | | | |
| External Noise | A2 | | | | |
| Power Supply (PSU-S680*) | A3 | | | | |
| Probe | A4 | | | | |
| TV Monitor | A5 | | | | |
| EP-3265 Main Control | B1 | | | | ● |
| EP-2960 Main Panel | B2 | | | | |
| L-KEY-26 Full keyboard | B3 | | | | |
| EP-2512 Blind Panel | B4 | | | | |
| EP-3466 (GEU) Mother Board | C1 | | | | |
| EP-3452 Rx Select Cont | C2 | | | | |
| EP-3453-1~-5 Probe Select Relay | C3 | | | | |
| EP-3454 Probe Selector | C4 | | | | |
| EP-3455 RX SELECT | C5 | | | | |
| EP-3456 TX 1 | C6 | | | | |
| EP-3457 TX 2 | C7 | | | | |
| EP-3458 Pre Amp | C8 | | | | |
| EP-3459 Rx Focus | C9 | | | | |
| EP-3461 Main Amp & Color ITF | C10 | | | | |
| EP-3463 VBPF & Gain Control | C11 | | | | |
| EP-3464 Tx Trigger Gene | C12 | | | | |
| EP-3465 GEU Timing & Address | C13 | | | | ● |
| EP-3525 GEU Interface | C14 | | | | ● |
| EP-3467 (DSC) Mother Board | D1 | | | | |
| EP-3247 B/W Memory | D2 | | | | |
| EP-3236 DSC Address | D3 | | | | |
| EP-3620 DSC Timing | D4 | | | | |
| EP-2729 A/D, D/A | D5 | | | | |
| EP-2913 Dual MPU | D6 | | | | |
| EP-2629 AGDC | D7 | | | | |
| EP-3477 US ITF | D8 | | | | |
| EP-2651 Color D/A | D9 | | | | |
| EP-3237 B/W Cine Memory | D10 | | | | |
| EP-5100 Color Flow Processor | D11 | | | | |
| EP-3115 Color Line Buffer | D12 | | | | |
| EP-3114 Color Post Process | D13 | | | | |
| EP-2213 Color Memory VEL | D14 | | | | |
| EP-2213 -1 Color Memory VAR | D15 | | | | |
| EP-3238 Color Cine Memory | D16 | | | | |
| EP-3443 Video ITF | D17 | | | | |
| FFA-18* Doppler unit | E1 | | | | |
| EP-3117 Physio Amp | F1 | ● | ● | ● | ● |
| EP-2841 ECG Memory | F2 | | | ● | |
| SSZ-700/203 Color printer/camera | G1 | | | | |
| VTR | G3 | | | | |

| Check List / Item | Problem Code | DP-1 | | | | DP-2 | | | | DP-3 | | | | DP-4 | | | | DP-5 |
|---|---|---|---|---|---|---|---|---|---|---|---|---|---|---|---|---|---|---|
| | Code | 1 | 2 | 3 | 4 | 1 | 2 | 3 | 4 | 1 | 2 | 3 | 4 | 1 | 2 | 3 | 4 | 1 |
| Operation | A1 | | | | | | | | | | | | | | | | | |
| External Noise | A2 | | | | | | | | | | | | | | | | | |
| Power Supply (PSU-S680*) | A3 | | | | | | | | | | | | | | | | | |
| Probe | A4 | | | | | | | | | | | | | | | ● | | |
| TV Monitor | A5 | | | | | | | | | | | | | | | | | |
| EP-3265 Main Control | B1 | | | ● | | | | ● | | | | | | | | | | |
| EP-2960 Main Panel | B2 | | | | | | | | | | | | | | | | | |
| L-KEY-26 Full keyboard | B3 | | | | | | | | | | | | | | | | | |
| EP-2512 Blind Panel | B4 | | | | | | | | | | | | | | | | | |
| EP-3466 (GEU) Mother Board | C1 | | | | | | | | | | | | | | | | | |
| EP-3452 Rx Select Cont | C2 | | | | | | | | | | | | | | | | | |
| EP-3453-1~-5 Probe Select Relay | C3 | | | | | | | | | | | | | | | | | |
| EP-3454 Probe Selector | C4 | | | | | | | | | | | | | | | | | |
| EP-3455 RX SELECT | C5 | | | | | | | | | | | | | | | | | |
| EP-3456 TX 1 | C6 | | | | | | | | | | | | | | | | | |
| EP-3457 TX 2 | C7 | | | | | | | | | | | | | | | | | |
| EP-3458 Pre Amp | C8 | | | | | | | | | | | | | | | | | |
| EP-3459 Rx Focus | C9 | | | | | | | | | | | | | ● | | | | |
| EP-3461 Main Amp & Color ITF | C10 | ● | | | | ● | | | | | | | | ● | | | | |
| EP-3463 VBPF & Gain Control | C11 | | | | | | | | | | | | | | | | | |
| EP-3464 Tx Trigger Gene | C12 | | | | | | | | | | | | | | | | | |
| EP-3465 GEU Timing & Address | C13 | ● | ● | | ● | | ● | | | | | | | | ● | | | |
| EP-3525 GEU Interface | C14 | ● | | | | | | | | | | | | | | | | |
| EP-3467 (DSC) Mother Board | D1 | | | | | | | | | | | | | | | | | |
| EP-3247 B/W Memory | D2 | | | | | | | | | | | | | | | | | |
| EP-3236 DSC Address | D3 | | | | | | | | | | | | | | | | | |
| EP-3620 DSC Timing | D4 | | | | | | | | | | | | | | | | | |
| EP-2729 A/D, D/A | D5 | | | | | | | | | | | | | | | | | |
| EP-2913 Dual MPU | D6 | | | | | | | | | | | | | | | | | |
| EP-2629 AGDC | D7 | | | | | | | | | | | | | | | | | |
| EP-3477 US ITF | D8 | | | | | | | | | | | | | | | | | |
| EP-2651 Color D/A | D9 | | | | | | | | | | | | | | | | | |
| EP-3237 B/W Cine Memory | D10 | | | | | | | | | | | | | | | | | |
| EP-5100 Color Flow Processor | D11 | | | | | | | | | | | | | | | | | |
| EP-3115 Color Line Buffer | D12 | | | | | | | | | | | | | | | | | |
| EP-3114 Color Post Process | D13 | | | | | | | | | | | | | | | | | |
| EP-2213 Color Memory VEL | D14 | | | | | | | | | | | | | | | | | |
| EP-2213 -1 Color Memory VAR | D15 | | | | | | | | | | | | | | | | | |
| EP-3238 Color Cine Memory | D16 | | | | | | | | | | | | | | | | | |
| EP-3443 Video ITF | D17 | | | | | | | | | | | | | | | | | |
| FFA-18* Doppler unit | E1 | ● | | | ● | ● | | | ● | ● | ● | ● | ● | ● | | ● | ● | ● |
| EP-3117 Physio Amp | F1 | | | | | | | | | | | | | | | | | |
| EP-2841 ECG Memory | F2 | | | | | | | | | | | | | | | | | |
| SSZ-700/203 Color printer/camera | G1 | | | | | | | | | | | | | | | | | |
| VTR | G3 | | | | | | | | | | | | | | | | | |

| Check List Item | Problem Code | CD-1 | | CD-2 | | CD-3 | | CD-4 | CD-5 |
|---|---|---|---|---|---|---|---|---|---|
| | Code | 1 | 3 | 1 | 3 | 1 | 3 | 1 | 1 |
| Operation | A1 | | | | | | | | |
| External Noise | A2 | | | | | | | | |
| Power Supply (PSU-S680*) | A3 | | | | | | | | |
| Probe | A4 | | | | | | | | |
| TV Monitor | A5 | | | | | | | | |
| EP-3265 Main Control | B1 | | | | | | | | |
| EP-2960 Main Panel | B2 | | | | | | | | |
| L-KEY-26 Full keyboard | B3 | | | | | | | | |
| EP-2512 Blind Panel | B4 | | | | | | | | |
| EP-3466 (GEU) Mother Board | C1 | | | | | | | | |
| EP-3452 Rx Select Cont | C2 | | | | | | | | |
| EP-3453-1~-5 Probe Select Relay | C3 | | | | | | | | |
| EP-3454 Probe Selector | C4 | | | | | | | | |
| EP-3455 RX SELECT | C5 | | | | | | | | |
| EP-3456 TX 1 | C6 | | | | | | | | |
| EP-3457 TX 2 | C7 | | | | | | | | |
| EP-3458 Pre Amp | C8 | | | | | | | | |
| EP-3459 Rx Focus | C9 | | | | | | | | |
| EP-3461 Main Amp & Color ITF | C10 | ● | ● | ● | ● | | ● | | |
| EP-3463 VBPF & Gain Control | C11 | | | | | | | | |
| EP-3464 Tx Trigger Gene | C12 | | | | | | | | |
| EP-3465 GEU Timing & Address | C13 | | | | | | | | |
| EP-3525 GEU Interface | C14 | | | | | | | | |
| EP-3467 (DSC) Mother Board | D1 | | | | | | | | |
| EP-3247 B/W Memory | D2 | | | | | | | | |
| EP-3236 DSC Address | D3 | | | | | | | | |
| EP-3620 DSC Timing | D4 | | | | | | | | |
| EP-2729 A/D, D/A | D5 | | | | | | | | |
| EP-2913 Dual MPU | D6 | | | | | | | | |
| EP-2629 AGDC | D7 | | | | | | | | |
| EP-3477 US ITF | D8 | | | | | | | | |
| EP-2651 Color D/A | D9 | ● | | | | ● | | | ● |
| EP-3237 B/W Cine Memory | D10 | | | | | | | | |
| EP-5100 Color Flow Processor | D11 | ● | ● | ● | | ● | ● | | |
| EP-3115 Color Line Buffer | D12 | ● | | | | ● | | | |
| EP-3114 Color Post Process | D13 | ● | | | | ● | | | |
| EP-2213 Color Memory VEL | D14 | | | | | ● | | | |
| EP-2213-1 Color Memory VAR | D15 | | | | | ● | | | |
| EP-3238 Color Cine Memory | D16 | ● | | | | ● | | | |
| EP-3443 Video ITF | D17 | | | | | | | ● | ● |
| FFA-18* Doppler unit | E1 | | | | | | | | |
| EP-3117 Physio Amp | F1 | | | | | | | | |
| EP-2841 ECG Memory | F2 | | | | | | | | |
| SSZ-700/203 Color printer/camera | G1 | | | | | | | | |
| VTR | G3 | | | | | | | ● | |

## 8 - 7 Waveform for troubleshooting

It described the waveforms form next page for the reference to judgment of defective PCB on the trouble shooting.

However, the specified waveforms have been selected to be signified to show with the consideration of specification of measuring equipment and characteristic of signals.

| | |
|---|---|
| • Caution • | Since the connector pin numbers are dependent on each PCBs, the pin numbers are shown for each signal should be changed to those suited to each PCB by making reference with " Section 6 PCB Block diagram ".<br>The specified wave informs have been recoded with the Logic Analyzer and its printer. Because, the same waveform cannot be always taken with your measuring equipment, please pay attention. |

EP-3457 Tx2

Probe : UST-959-3.5
Mode : M
Acoustic PW : 10

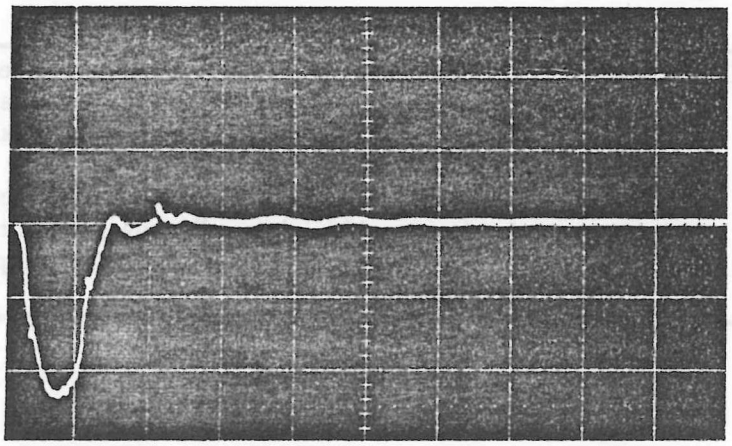


200ns/div

* The waveform is observed with oscilloscope.

EP-3458 Pre AMP

Probe : UST-959-3.5
Mode : Dop
Vel range : +22 , -22

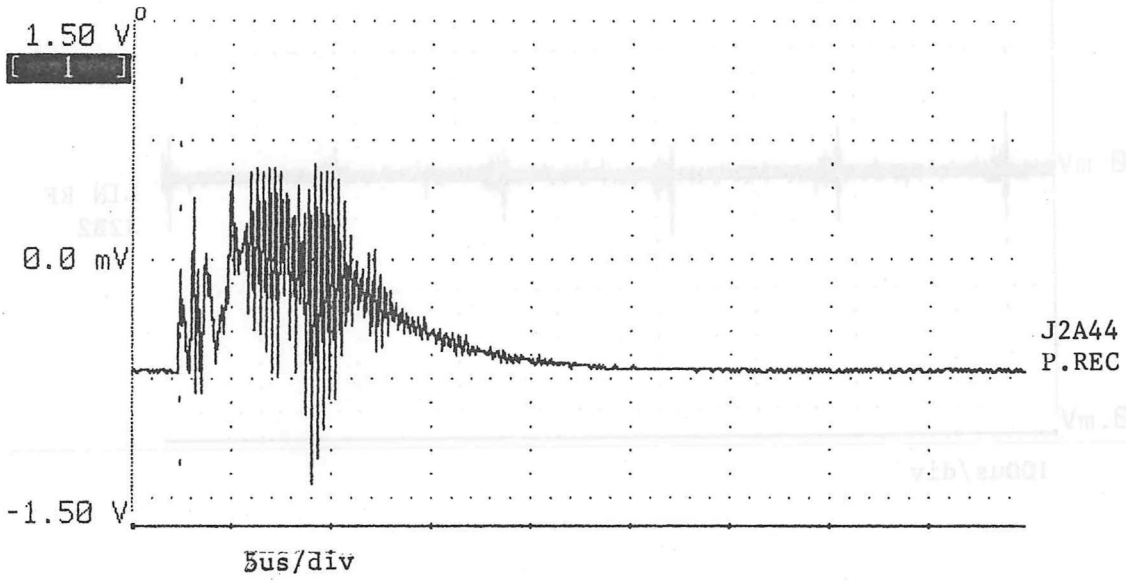


Probe : UST-959-3.5
Mode : B
Focus : 4

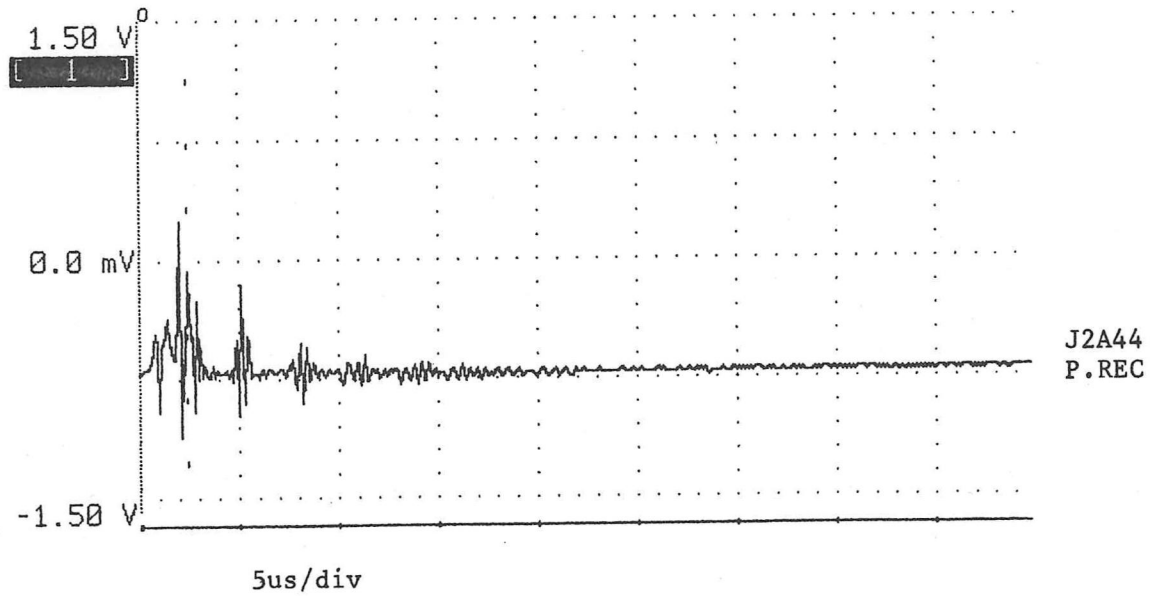

EP-3459 RX FOCUS

Probe : UST-959-3.5
Mag : x1
Mode : Dop
Vel range : +66,-64

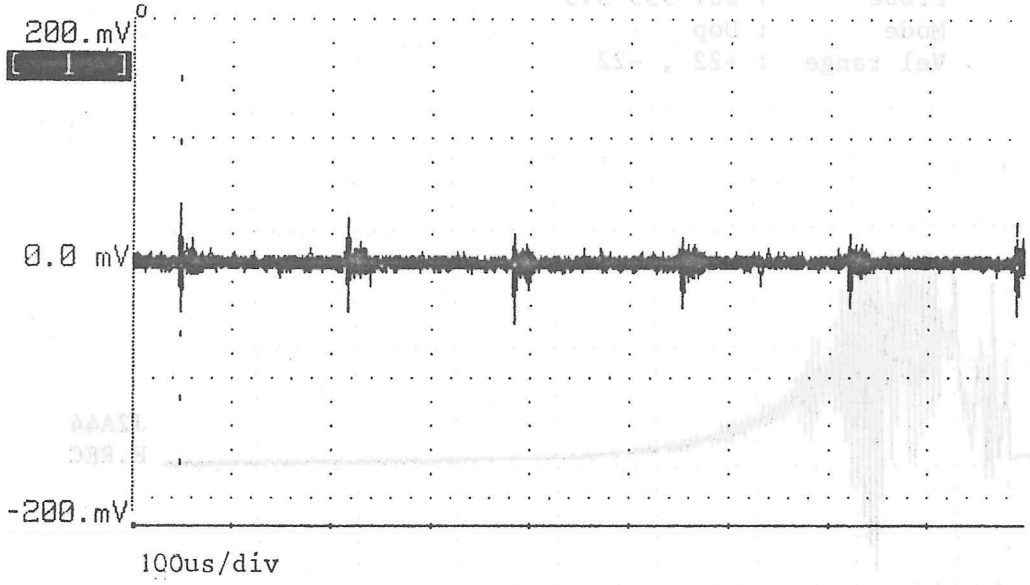

EP-3461 MAIN AMP & COLOR ITF

Probe : UST-959-3.5
Mode : B/B
Mag : X1

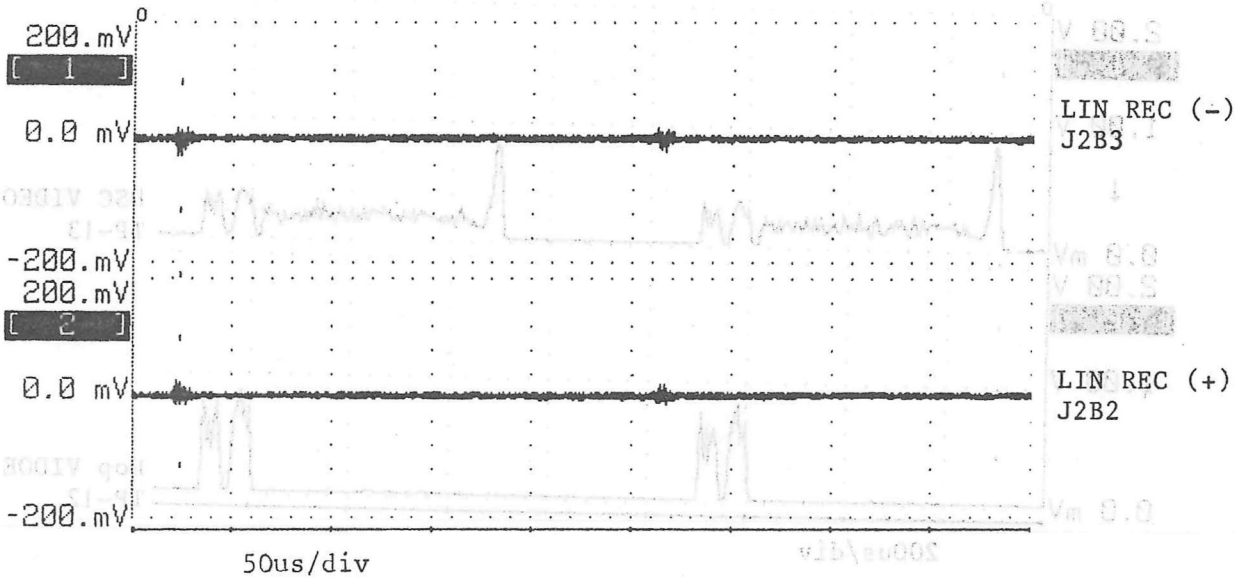


Probe : UST-959-3.5
MODE : B/FLOW
Mag : X1
MAX Vel : 11
FLOW GAIN : Max

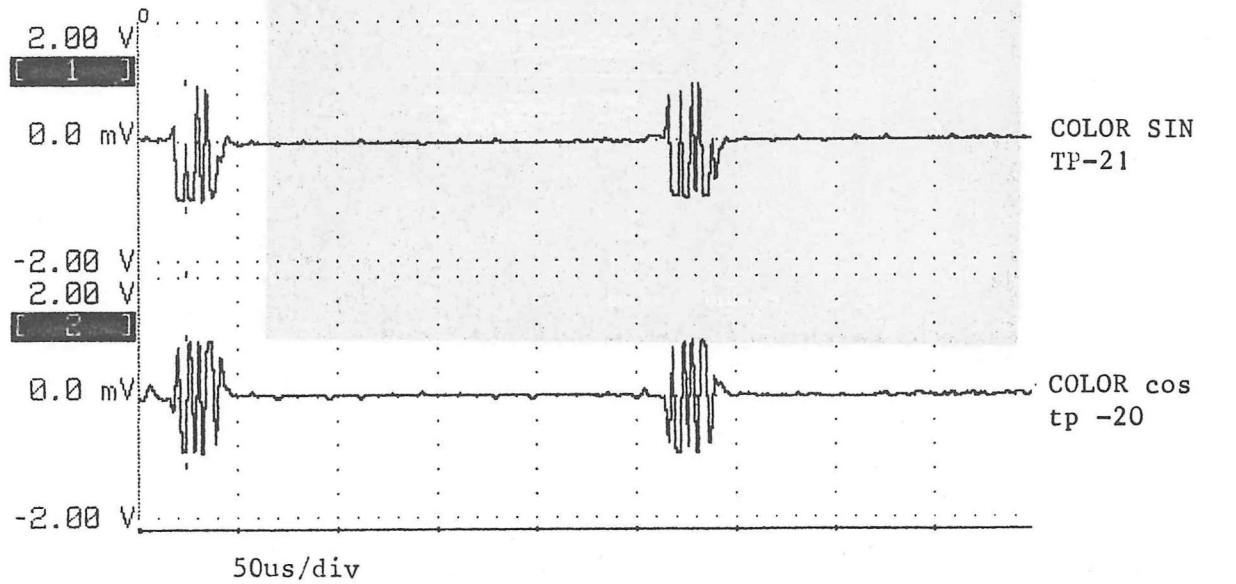

EP-3461 MAIN AMP & COLOR ITF

Probe : UST-959-3.5
Mode : B/Dop
VEL Range : +22 -22
Dop GAIN : Max

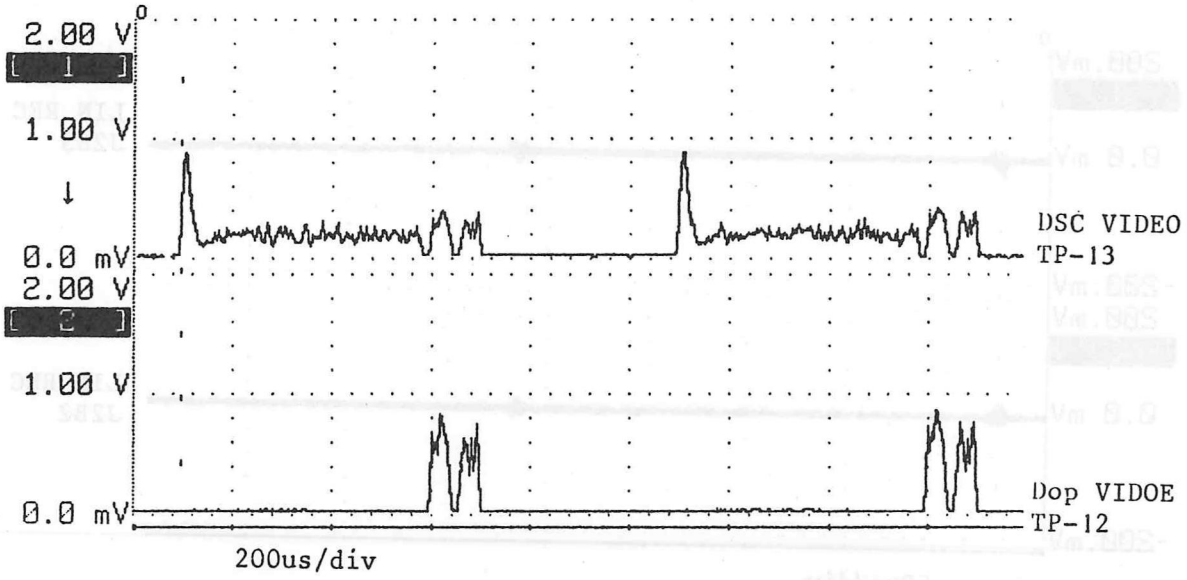


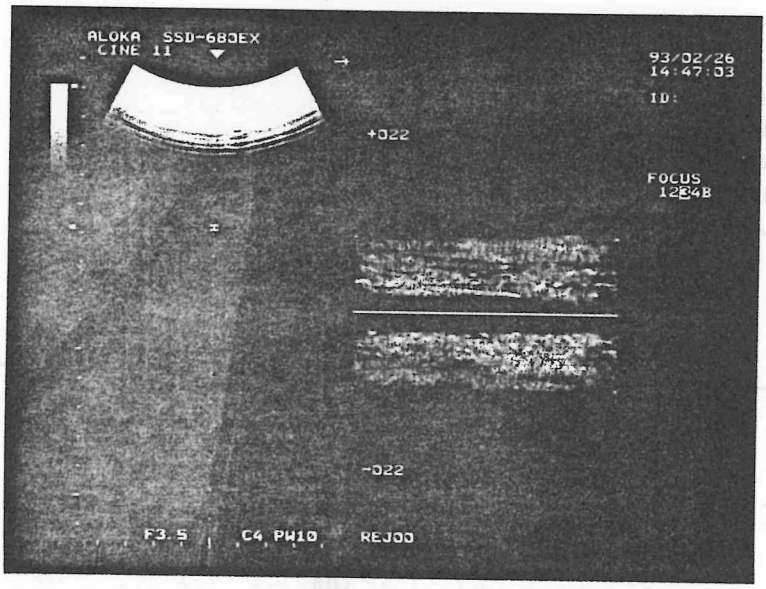

EP-3461 MAIN AMP & COLOR ITF

Probe : UST-959-3.5
MODE : B
B GAIN : MAX
STC : Center

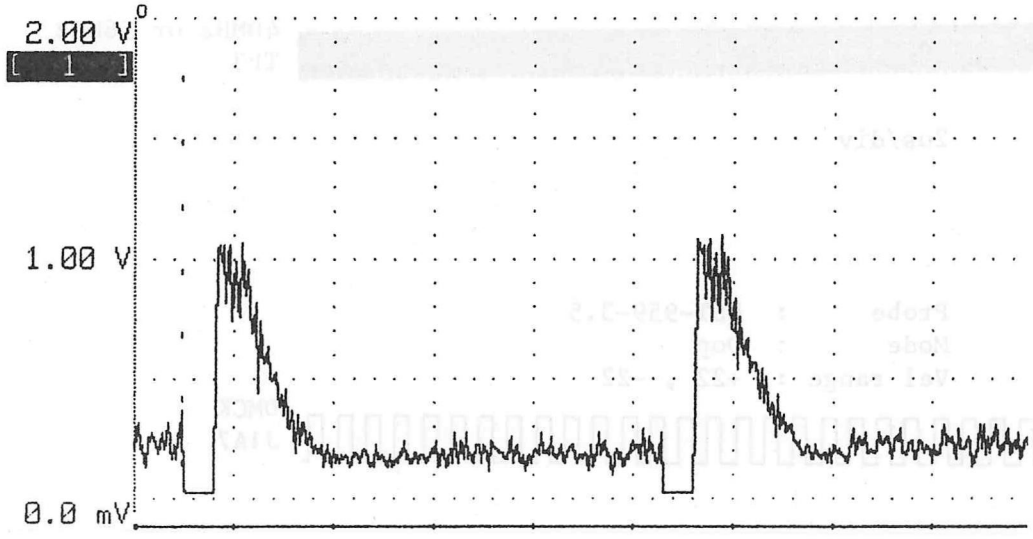


DSC VIDEO
TP 13

50us/div

Probe : UST-959-3.5
MODE : M
M GAIN : MAX
STC : Center

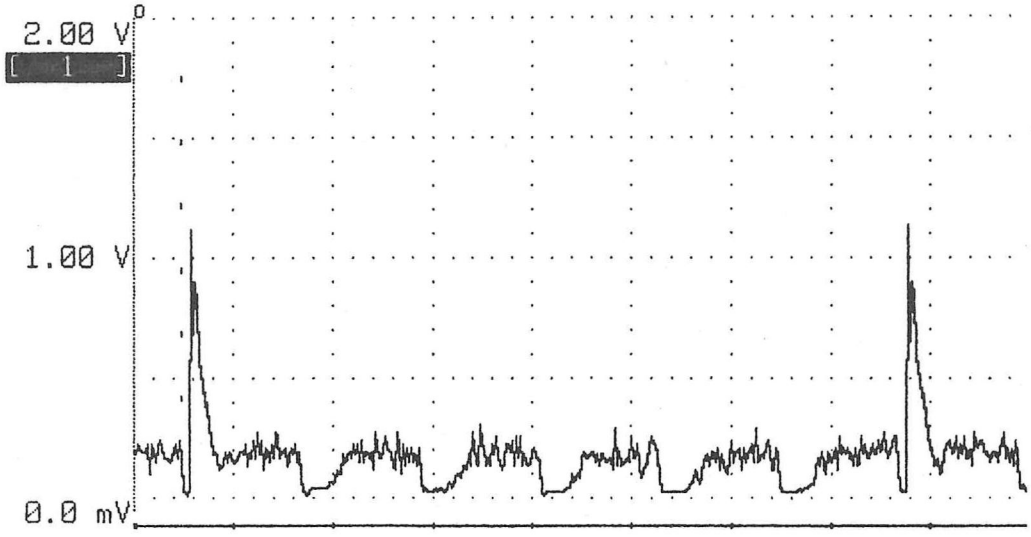


DSC VODEO
TP13

200us/div

EP-3465 GEU TIMING & ADDRESS

Probe : UST-959-3.5
Mode : Dop
Vel range : +22 , -22

40MHz or 56MHz
TP3

2us/div

Probe : UST-959-3.5
Mode : Dop
Vel range : +22 , -22

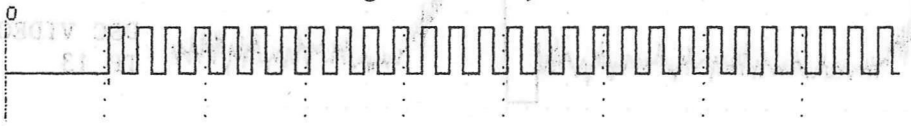


DMCK
J1A7

500ns/div

EP-3465 GEU TIMING & ADDRESS

Probe : UST-959-3.5
Mag : X1
Mode : B
Focus : 2 , 4

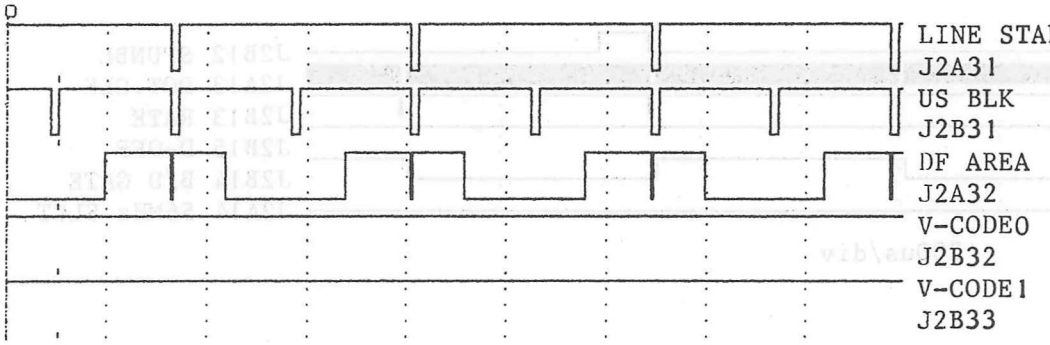


200us/div

Mag : X1
Mode : B/M
Focus : 3

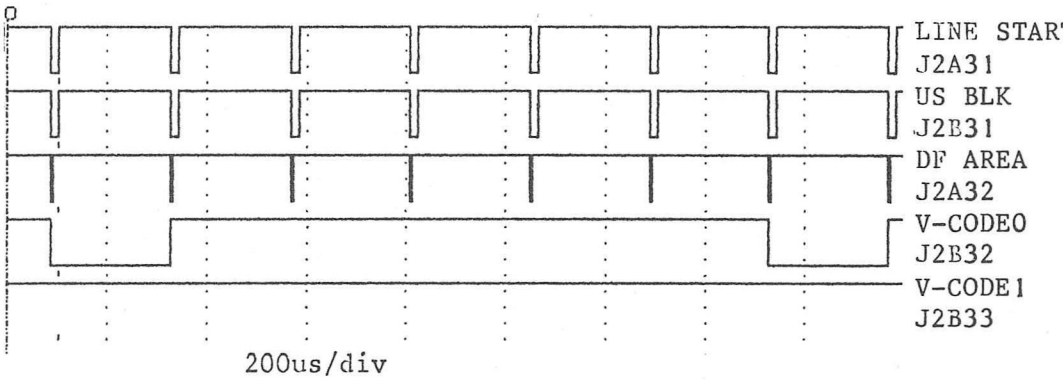


200us/div

Mag : X1
Mode : B/Dop
Focus : 3
Vel range : +22 , -22

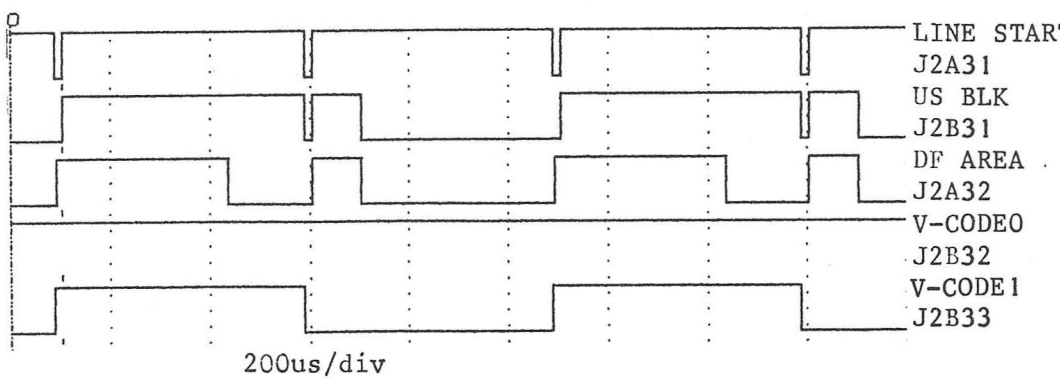


200us/div

EP-3465 GEU TIMING & ADDRESS

PROBE : UST-959-3.5
MODE : B/DOP
MAG : X1
VEL RANGE : +22 , -22
FOCUS : 3

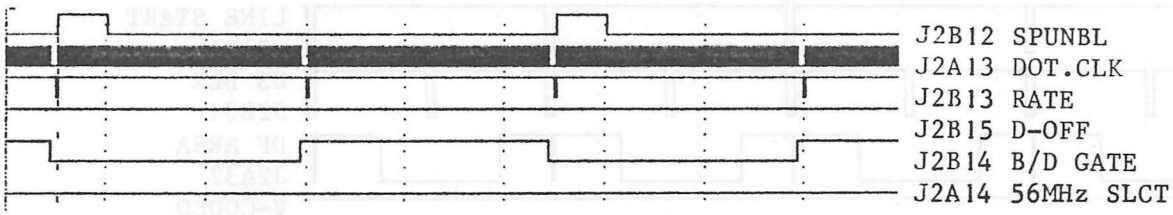


200us/div

EP-3465 GEU TIMING & ADDRESS

Probe : UST-959-3.5
MODE : B/FLOW
Mag : X1
FOCUS : BROAD
Max VEL : 11

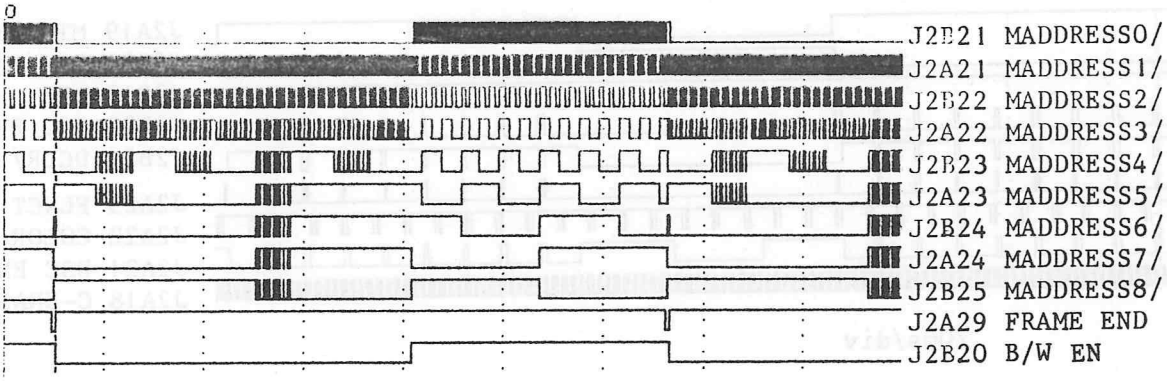


20ns/div

EP-3465 GEU TIMING & ADDRESS

Probe : UST-959-3.5
Mode : B/FLOW
MAX Vel : 11

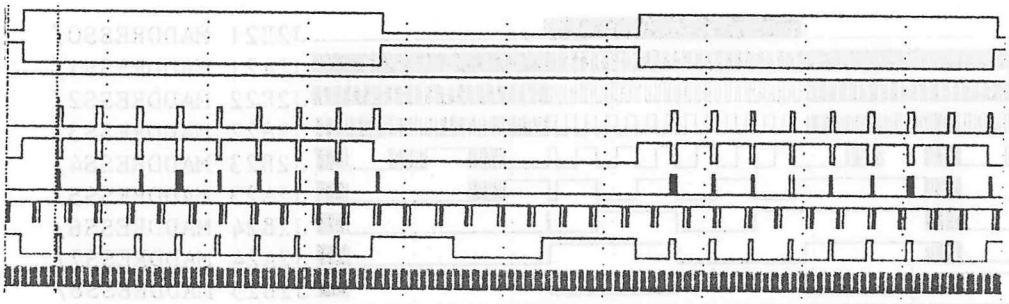


20ms/div

Probe : UST-959-3.5
Mode : B/FLOW
MAX Vel : 11

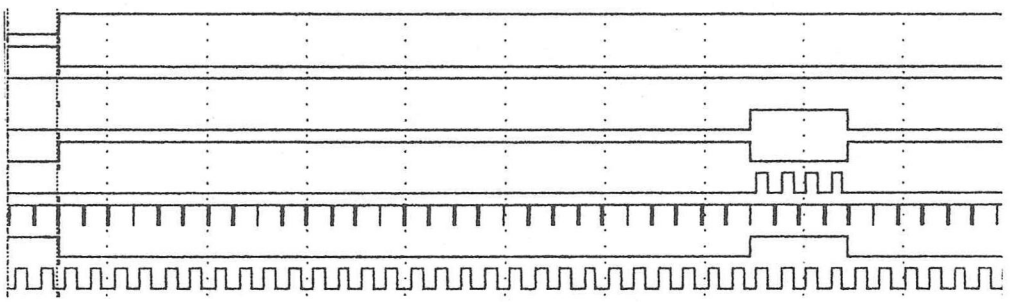


1ms/div

STC setting

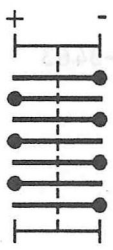


EP-3463 VBPE & GAIN CONTROL

Probe : UST-959-3.5
Mag : X1
Mode : B
GAIN : Max

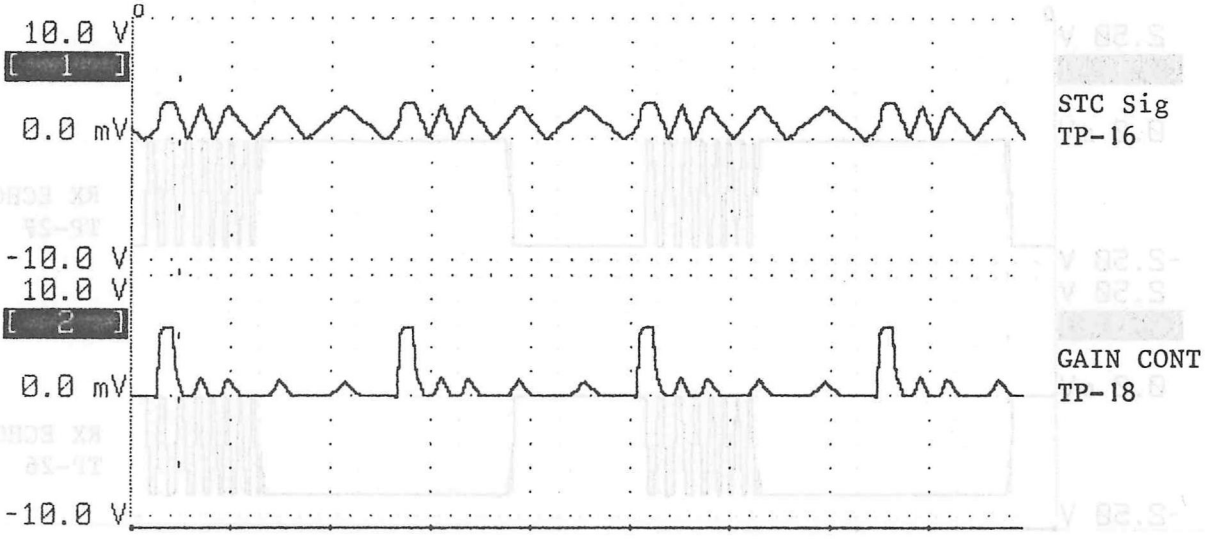


100us/div

Probe : UST-959-3.5
Mag : X1
Mode : B
Focus : 4

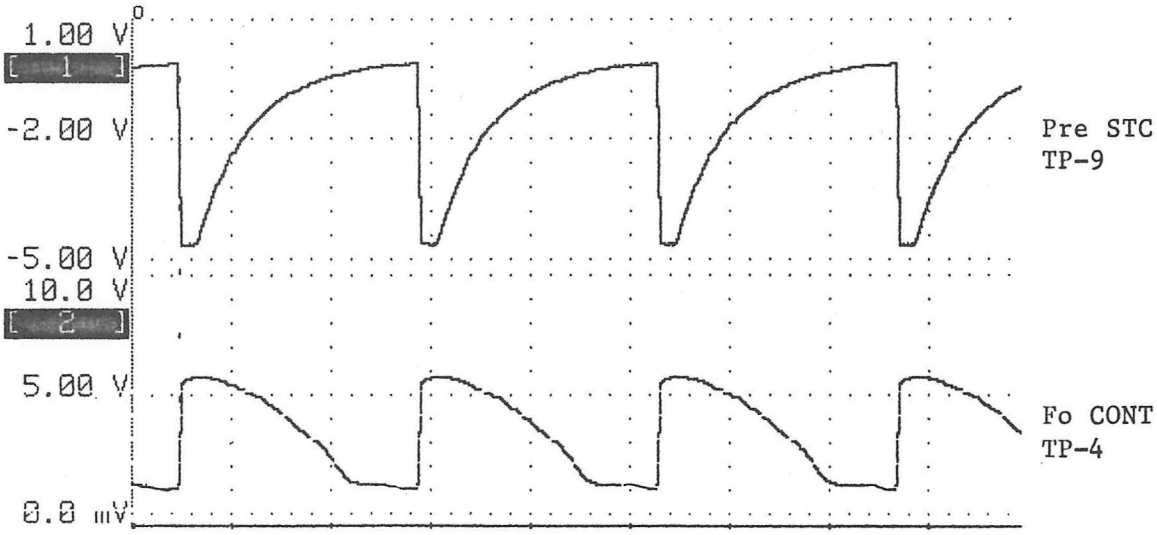


100us/div

EP-3463 VBPF & GAIN CONTROL

Probe : UST-959-3.5
Mag : X1
Mode : B/Dop
Vel range: +22 , -22
Focus : 3

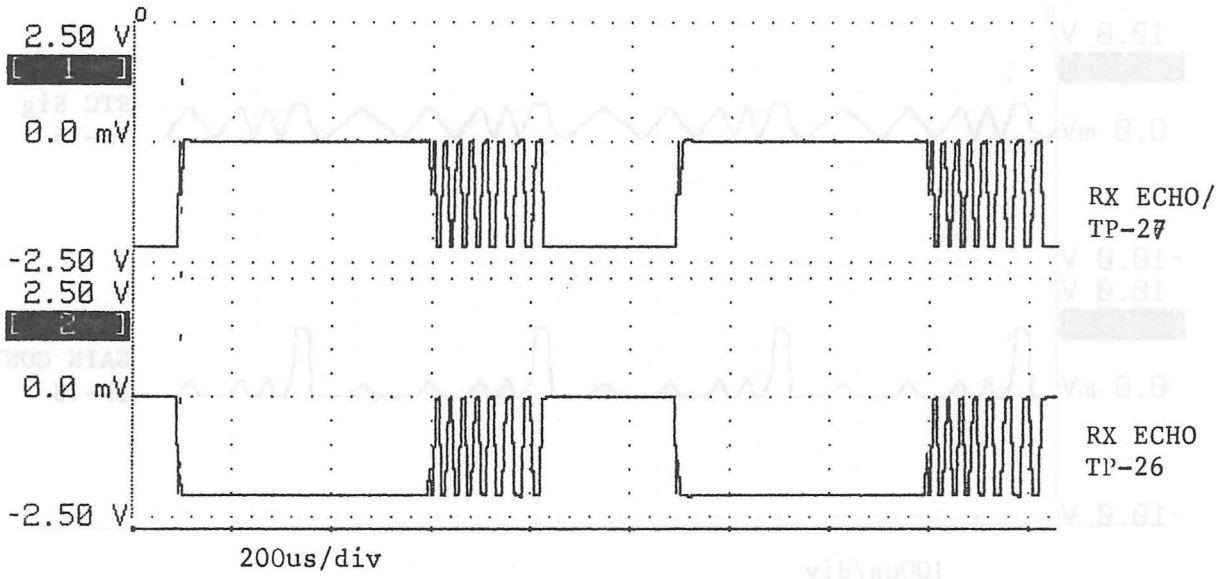

EP-3463 VBPF & GAIN CONTROL

Probe : UST-959-3.5
MODE : B
FOCUS : 3

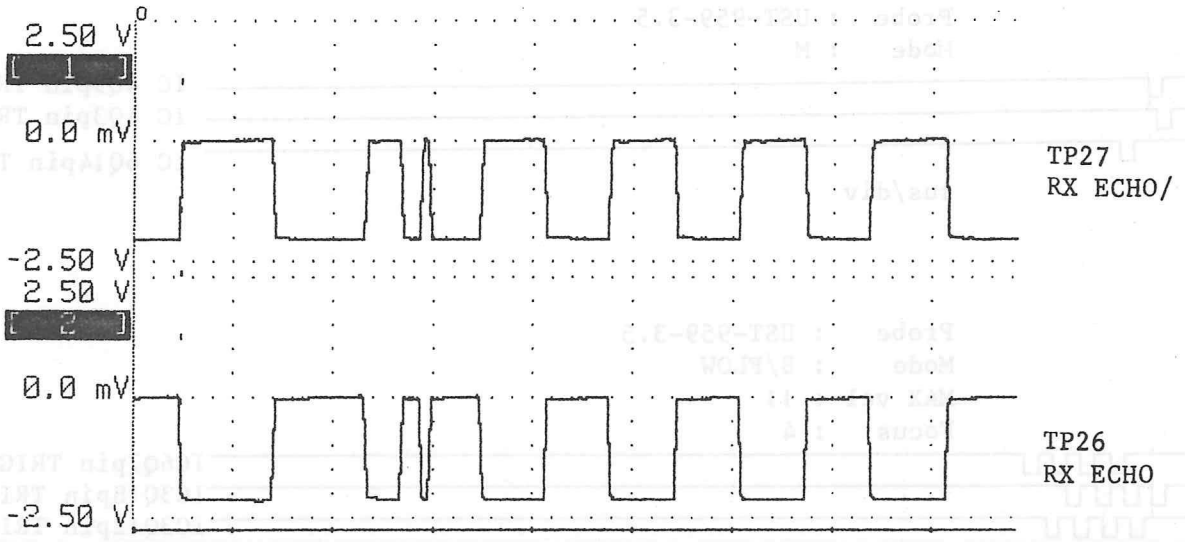


20us/div

EP-3464 Tx Trigger GENE

Probe : UST-959-3.5
Mode : M

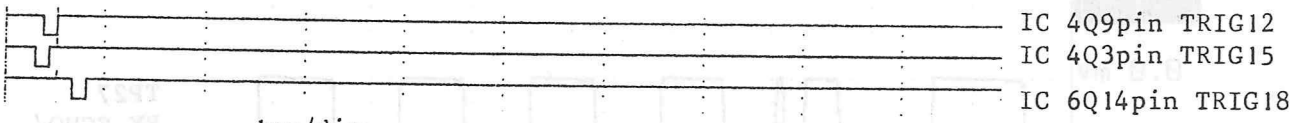


lus/div

Probe : UST-959-3.5
Mode : B/FLOW
MAX vel : 11
Focus : 4

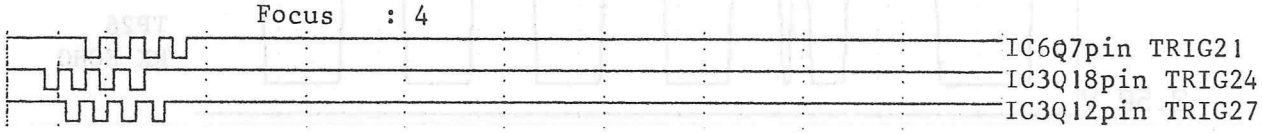


lus/div

Probe : UST-959-3.5
Mode : Dop
Vel range : +22 , -22

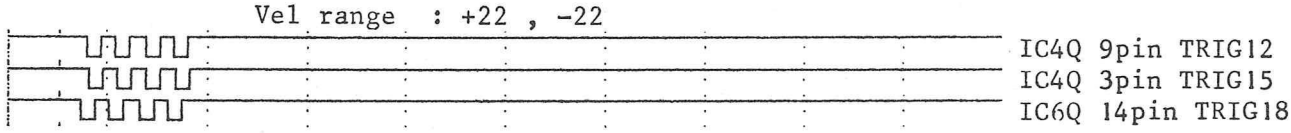


lus/div

EP-2729 AD/DA

Mode : B
FOCUS : 2 , 4
B GAIN : Max
STC : All STC knobes to max
Probe : UST-959-3.5

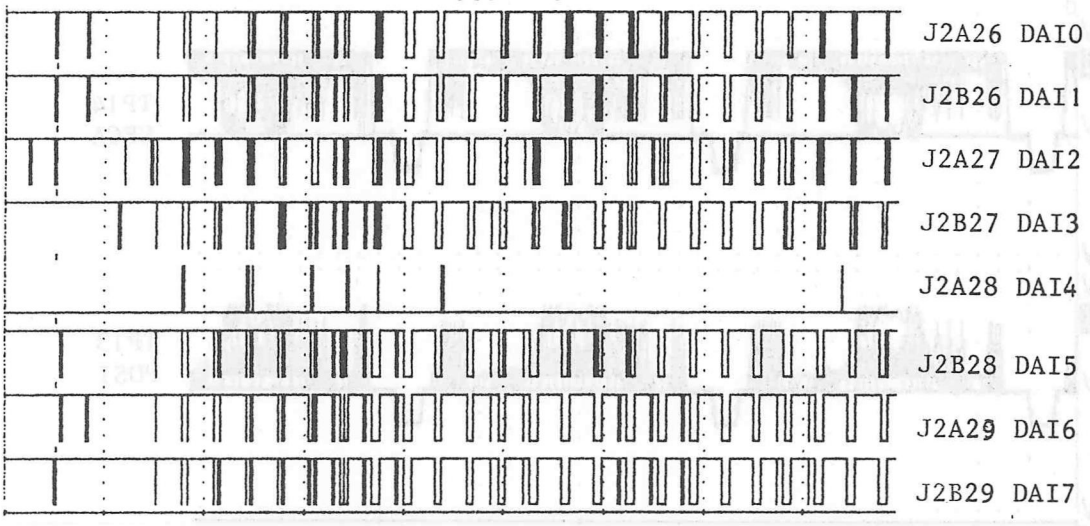


200us/div

Probe : UST-959-3.5
Mode : B
FOCUS : 2 , 4

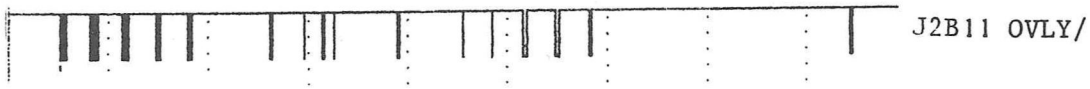


200us/div

EP-2729 AD/DA

Probe : UST-959-3.5
MODE : B
MAG : X1
B GAIN : Max
STC : All STC knobes to center

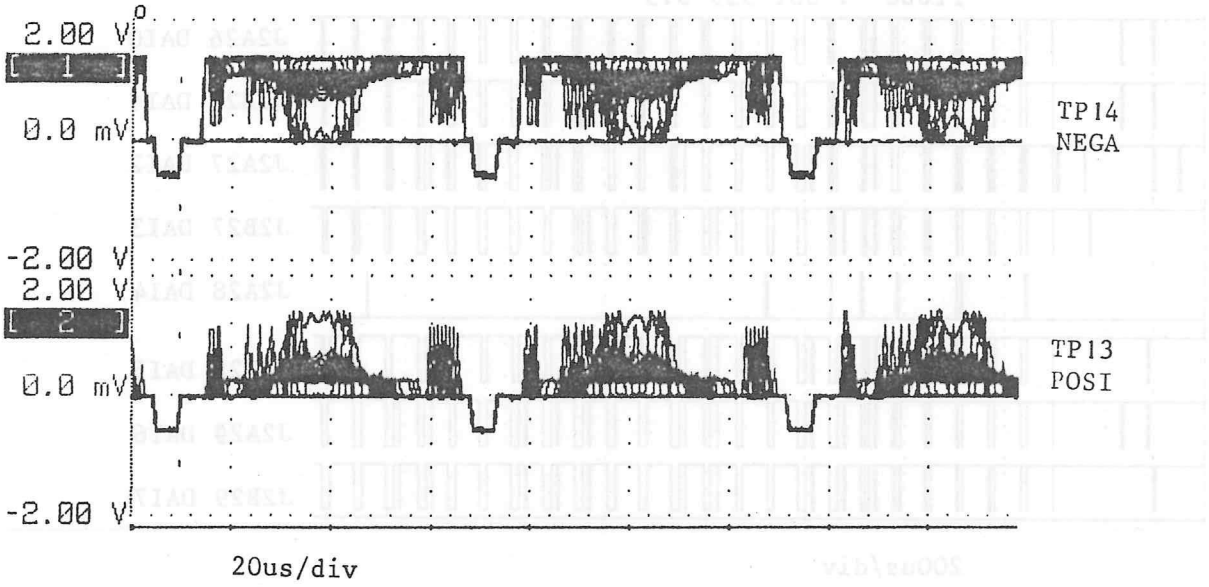

EP-5100 COLOR FLOW PROCESSOR

PROBE : UST-959-3.5
MODE : B/FLOW
FOCUS : B
VEL RANGE : 11
FLOW GAIN : Max

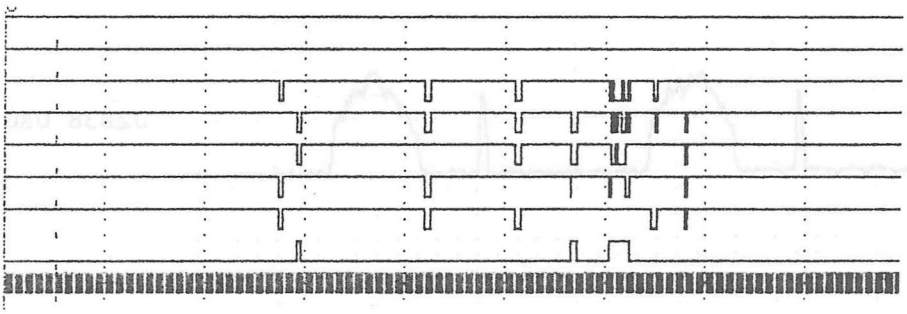


20us/div

PROBE : UST-959-3.5
MODE : B/FLOW
FOCUS : B
VEL RANGE : 11
FLOW GAIN : Max

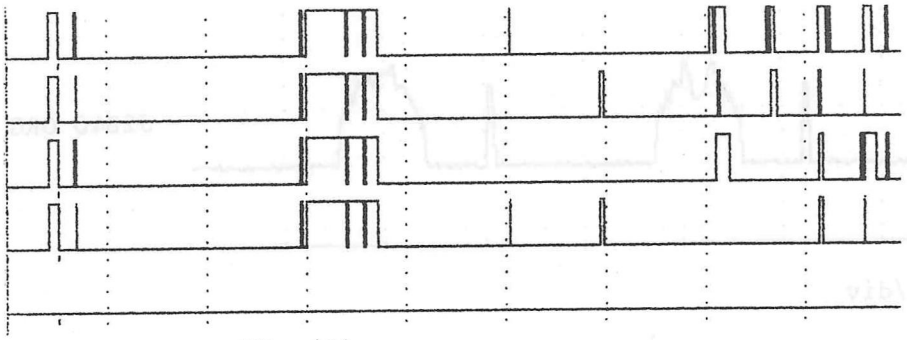


20us/div

EP-2651 COLOR D/A

Probe :UST-959-3.5
Mode : B/FLOW
B GAIN : Max
FLOW GAIN : Max
STC : All STC knobes to max

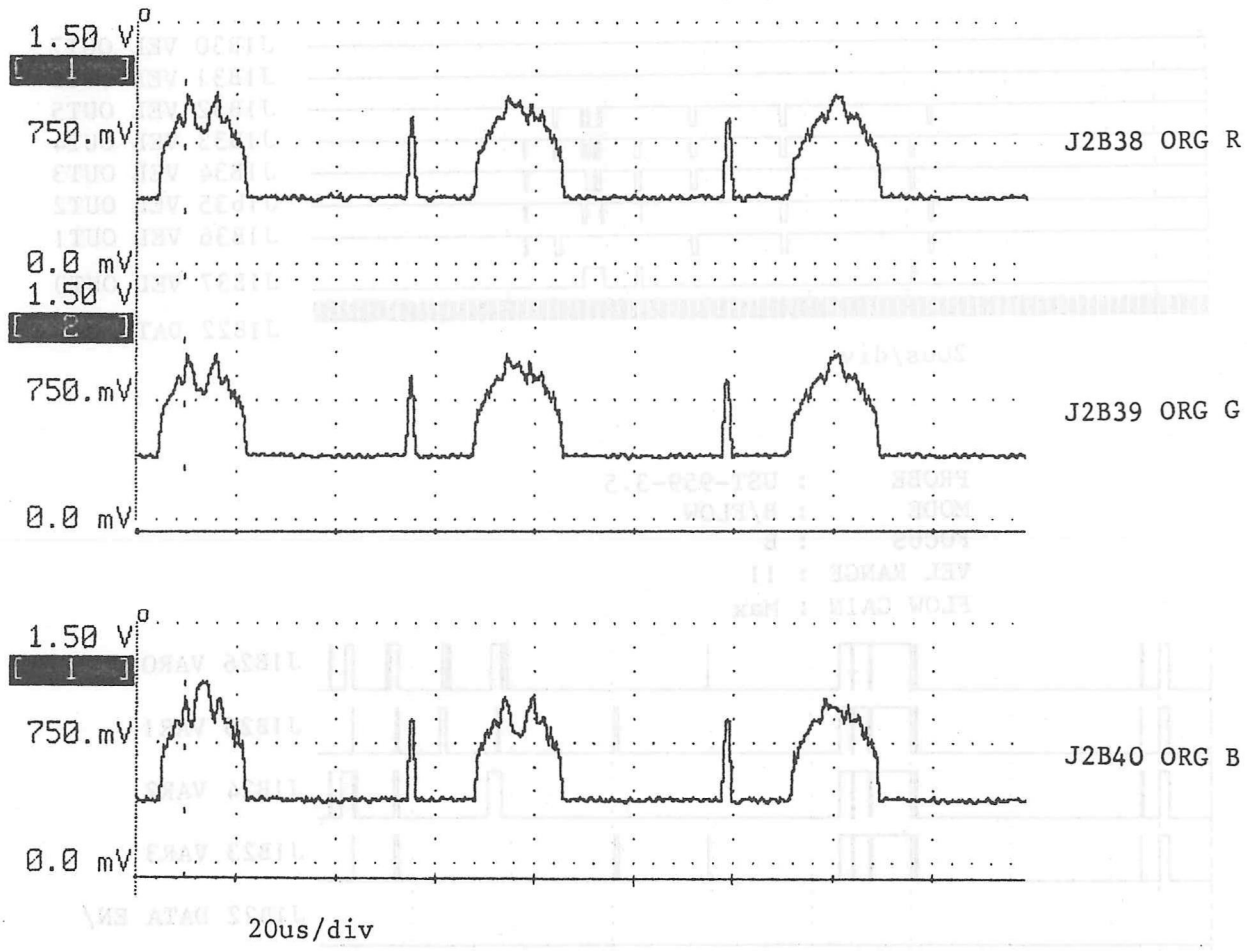

EP-3443 VIDEO ITF

Probe : UST-959-3.5
MODE : B/FLOW
B GAIN : MAX
FLOW GAIN : Max
STC : All STC knobes to max

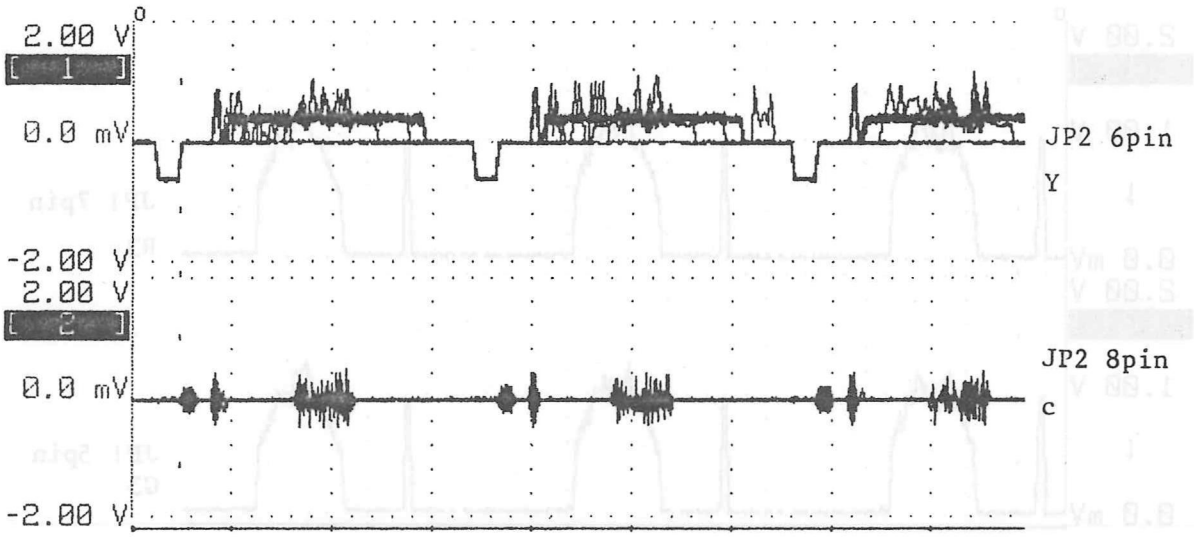


20us/div

EP-3443 VIDEO ITF

Probe : UST-959-3.5
Mode : B/FLOW
Mag : X1
Max VEL : 11
FLOW GAIN : Max
B Gain : Max
STC : All STC knobes to max

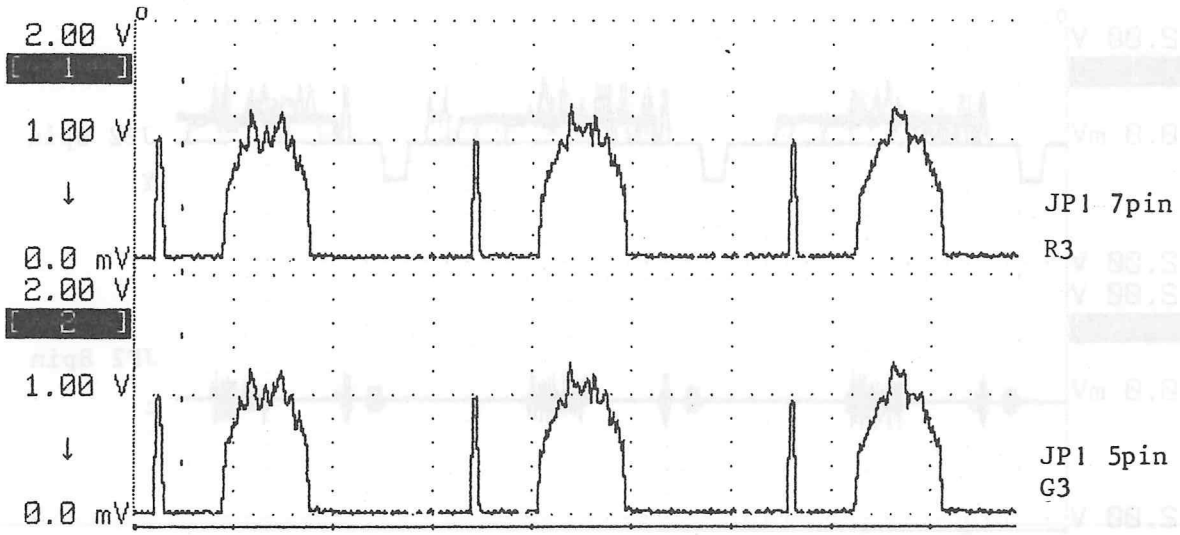


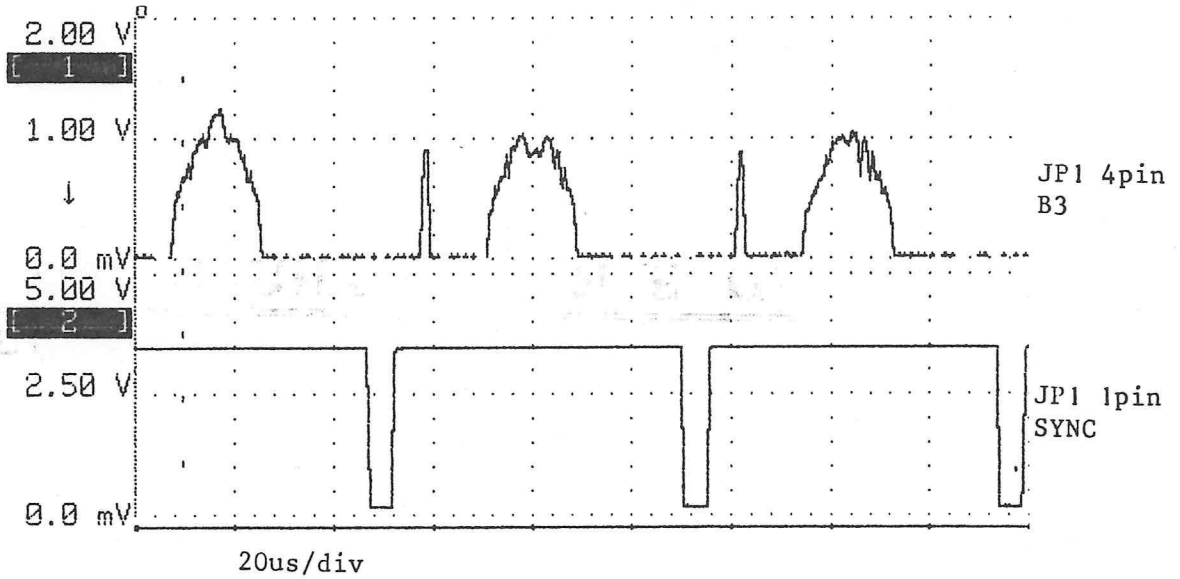

# SSD-680EX / SSD-680STD SERVICE MANUAL 1/2

MN2-0187

Aloka ALOKA CO.,LTD.
6-22-1 MURE, MITAKA-SHI, TOKYO, JAPAN
TELEPHONE : 81-422-45-5111
FAX : 81-422-48-5058